SEMI E47.1-0306
PROVISIONAL MECHANICAL SPECIFICATION FOR FOUPS USED TO TRANSPORT AND STORE 300 mm WAFERS

This Standard was technically approved by the Physical Interfaces & Carriers Global Technical Committee. This edition was approved for publication by the global Audits and Reviews Subcommittee on November 29, 2005 and January 16, 2006. Available at www.semi.org in March 2006; originally published in 1997; previously published March 2005.

1 Purpose

1.1 This standard partially specifies the FOUPs used to transport and store 300 mm wafers in an IC manufacturing facility.

2 Scope

2.1 This standard is intended to set an appropriate level of specification that places minimal limits on innovation while ensuring modularity and interchangeability at all mechanical interfaces. Most of the requirements given in this specification are in the form of maximum or minimum dimensions with very few required surfaces. Only the physical interfaces (other than the door mechanism and kinematic couplings) for FOUPs are specified; no materials requirements or micro-contamination limits are given. The enclosure specified in this standard can be a sealed minienvironment, but it could also just be a box with well-defined interfaces.

2.2 The FOUP has the following components and subcomponents:

Key:

- • Required feature
- ◊ Optional feature

- • top
  - • top handling flange
  - • center hole on top handling flange
  - ◊ 3 kinematic grooves on top handling flange (optional)
- • interior
  - • cassette (with supports for 13 or 25 wafers)
  - • wafer capture mechanism
  - • 2 end effector exclusion zones
- • sides
  - ◊ 2 side fork-lift flanges (optional)
  - ◊ ergonomic manual handles (optional)
- • door
  - • holes for latch keys that lock the door to the FIMS interface when the door is unlatched from the FOUP
  - • holes for registration pins
  - • door sensing pads
- • bottom
  - • 4 bottom conveyor rails (with the bottom of the front seal zone acting as the fourth rail and the rear rail optional)
  - • 2 fork-lift pin holes

SUPERSEDED

Documents Document Sharing Hub
Full document details: SEMI E47.1-0306

- 5 carrier sensing pads
- center retaining feature
- front retaining feature
- 4 info pads
- 2 advancing FOUP sensing pads
- 3 features that mate with kinematic coupling pins and provide a 10 mm lead in
  - ◊ 3 features that mate with kinematic coupling pins and provide a 15 mm lead in (optional)
  - ◊ front conveyor surface
- rear
  - ◊ RFID tag placement volume

2.3 This standard is provisional because of concerns about the kinematic coupling pins causing excessive wear on carriers and the usefulness of the robotic handling flanges and conveyor rails. Once FOUP testing is done, this standard should be modified and upgraded from provisional status.

NOTICE: SEMI Standards and Safety Guidelines do not purport to address all safety issues associated with their use. It is the responsibility of the users of the Documents to establish appropriate safety and health practices, and determine the applicability of regulatory or other limitations prior to use.

3 Referenced Standards and Documents

3.1 *SEMI Standards and Safety Guidelines*

SEMI E1.9 — Mechanical Specification for Cassettes Used to Transport and Store 300 mm Wafers

SEMI E15 — Specification for Tool Load Port

SEMI E15.1 — Specification for 300 mm Tool Load Port

SEMI E19 — Standard Mechanical Interface (SMIF)

SEMI E47 — Specification for 150 mm/200 mm Pod Handles

SEMI E57 — Mechanical Specification for Kinematic Couplings Used to Align and Support 300 mm Wafer Carriers

SEMI E62 — Provisional Specification for 300 mm Front-Opening Interface Mechanical Standard (FIMS)

SEMI S8 — Safety Guidelines for Ergonomics Engineering of Semiconductor Manufacturing Equipment

NOTICE: Unless otherwise indicated, all documents cited shall be the latest published versions.

4 Terminology

4.1 *Definitions*

4.1.1 *bilateral datum plane* — a vertical plane that bisects the wafers and that is perpendicular to both the horizontal and facial datum planes (as defined in SEMI E57).

4.1.2 *box* — a protective portable container for a cassette and/or substrate(s).

4.1.3 *carrier capacity* — the number of substrates that a carrier holds (as defined in SEMI E1.9).

4.1.4 *cassette* — an open structure that holds one or more substrates.

4.1.5 *facial datum plane* — a vertical plane that bisects the wafers and that is parallel to the front side of the carrier (where wafers are removed or inserted). On tool load ports, it is also parallel to the load face plane specified in SEMI E15 on the side of the tool where the carrier is loaded and unloaded (as defined in SEMI E57).

4.1.6 *front-opening unified pod (FOUP)* — a box (that complies with SEMI E47.1) with a non-removable cassette (so that its interior complies with SEMI E1.9) and with a front-opening interface (that mates with a FIMS port that complies with SEMI E62).

SUPERSEDED

Documents
Document Sharing Hub
Full document details: SEMI E47.1-0306

4.1.7 *horizontal datum plane* — a horizontal plane from which projects the kinematic-coupling pins on which the carrier sits. On tool load ports, it is at the load height specified in SEMI E15 and might not be physically realized as a surface (as defined in SEMI E57).

4.1.8 *minienvironment* — a localized environment created by an enclosure to isolate the product from contamination and people.

4.1.9 *nominal wafer center line* — the line that is defined by the intersection of the two vertical datum planes (facial and bilateral) and that passes through the nominal centers of the seated wafers (which must be horizontal when the carrier is placed on the coupling) (as defined in SEMI E57).

4.1.10 *pod* — a box having a Standard Mechanical Interface (SMIF) per SEMI E19.

4.1.11 *robotic handling flanges* — horizontal projections on the top of the FOUP for lifting and rotating the FOUP.

4.1.12 *wafer carrier* — any cassette, box, pod, or boat that contains wafers (as defined in SEMI E15).

5 Ordering Information

5.1 *Intended Use* — This standard is intended to specify 300 mm FOUPs over a reasonable lifetime of use, not just those in new condition. For this reason, the purchaser needs to specify a time period and the number and type of uses to which the FOUPs will be put. It is under these conditions that the FOUPs must remain in compliance with the requirements listed in § 6.

5.2 *Temperature Ranges* — The purchaser of 300 mm FOUPs needs to specify two sets of temperatures to which the FOUPs might be exposed. An operating temperature range is the set of environmental temperatures in which the FOUPs will remain in compliance with the requirements listed in § 6. A temporary temperature range is the set of environmental temperatures to which the FOUPs can be exposed such that when the FOUPs return to the operating temperature range, the FOUPs will be in compliance with the requirements listed in § 6. Limits on exposure times to elevated temperatures should be specified. Also, the purchaser needs to specify a range of temperatures for the wafers that might be inserted in the FOUPs.

5.3 *Fire Resistance* — The purchaser of 300 mm FOUPs may need to consider the flammability of the FOUPs.

5.4 *Info Pad Configurations* — The purchaser of 300 mm carriers needs to specify the desired info pad configuration (up or down).

6 Requirements

6.1 *Kinematic Couplings* — The physical alignment mechanism from the FOUP to the tool load-port (or a nest on a vehicle or in a stocker) consists of features (not specified in this standard) on the top entity that mate with three or six pins underneath as defined in SEMI E57. Most of the dimensions of the FOUP are determined with respect to the three orthogonal datum planes defined in that standard: the horizontal datum plane, the facial datum plane, and the bilateral datum plane. All of the dimensions for the FOUP are bilaterally symmetric about both the bilateral and facial datum planes with the following exceptions:

- The features that mate with the kinematic coupling pins and the FOUP sensing pads are symmetrical only about the bilateral datum plane.
- The FOUP has a door only on the front and conveyor rails on the left and right sides that are required to extend all the way to the front.
- The orientation notches on the robotic handling flange are different for each of the four sides.

The three features that mate with the kinematic coupling pins must provide a lead-in capability that corrects a FOUP misalignment of up to *r*69 in any horizontal direction.

6.2 (This section, *"Internal Kinematic Couplings"* is no longer applicable, and is intentionally left blank so as to maintain paragraph numbering.)

6.3 *Interior Dimensions* — The interior of the FOUP must have the interior dimensions of the cassette specified in SEMI E1.9. Many of these dimensions are measured from a horizontal datum plane, so an internal horizontal datum plane is still specified to be *z*44 above the horizontal datum plane under the FOUP.

SUPERSEDED

Documents Document Sharing Hub
Full document details: SEMI E47.1-0306

6.4 *Door*

6.4.1 (This section [6.4.1] is no longer applicable, and is intentionally left blank so as to maintain paragraph numbering.)

6.4.2 The FOUP door is on the front side of the FOUP (corresponding to the front side of the cassette where wafers are accessed so the door is perpendicular to the wafers and parallel to the facial datum plane), and the door and its frame must be designed to mate with a port that conforms to SEMI E62. Specifically, the FOUP door and its frame must have surfaces that mate with the seal zones and the reserved spaces for vacuum application (which includes all of the circles bounded by *r*38 except for the holes for the registration pins at the center of each circle) defined in ¶¶ 5.3 and 5.6 of SEMI E62 (which specifies *r*38). These FOUP door and frame surfaces must be a distance of *y*52 from the facial datum plane and must have a flatness of *y*42. No surface on the FOUP door may project further from the facial datum plane than the door seal zone and the reserved spaces for vacuum application. The door of the FOUP must also be designed so that when the FOUP is pressed against the FIMS port, both latch keys on the port are inserted to their full length. Furthermore, when the latch keys are turned more than 45° toward the position that unlocks the FOUP door from the FOUP, the latch key holes on the door must be such that the door is not removable from the latch keys.

6.5 *Wafer Capture and Centering* — When the FOUP is closed, the wafers must be captured in the FOUP to prevent movement during transport. Wafer capture must include gently pushing the wafers to the rear of the cassette to center them.

6.6 *Internal Dimensions* — The interior of any FOUP must not intrude on the end effector exclusion zone, and the inside of the door must not intrude more that *y*51 toward the facial datum plane. The interior of the FOUP between *y*11 and the door opening must not protrude higher than *z*6 above the internal horizontal datum plane and lower than *z*15 above the top nominal wafer plane. Horizontally, it must not protrude closer to the bilateral datum plane than *x*51 between *y*11 and *y*49 or closer than *x*52 between *y*49 and *y*52 (as shown in Figure 10). Dimensions *x*51, *x*52, *y*49, and *y*52 are specified in Table 1, and *y*11, *z*6, and *z*15 are specified in SEMI E1.9.

6.7 *External Dimensions* — Figures 5 through 8 show the side view, rear view, top view, and bottom view for the FOUP. Table 1 defines all of the dimensions. In this and following figures, the heaviest lines are used for surfaces that have tolerances (not surfaces that have only maximum or only minimum dimensions). If a FOUP identification tag is used, it must be located at the bottom rear centered on the bilateral datum plane and must be contained within the maximum outer dimensions of the FOUP. RFID tag placement volume is defined in ¶ 6.13.

NOTE 1: Figures 1 through 4 have been removed from this document.

SUPERSEDED

Documents
Document Sharing Hub
Full document details: SEMI E47.1-0306

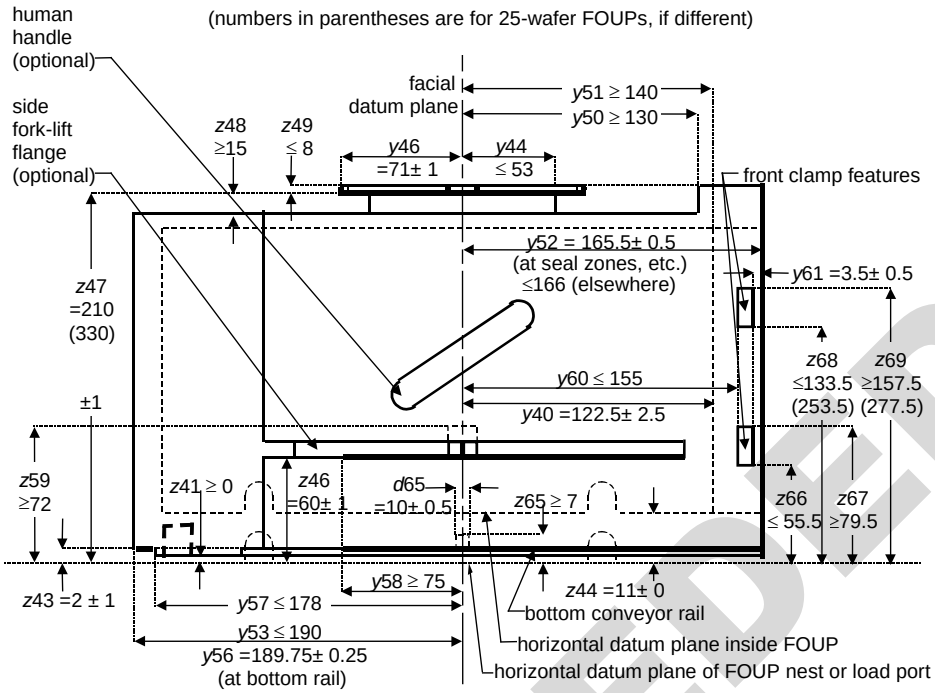

Figure 5
Side View of FOUP

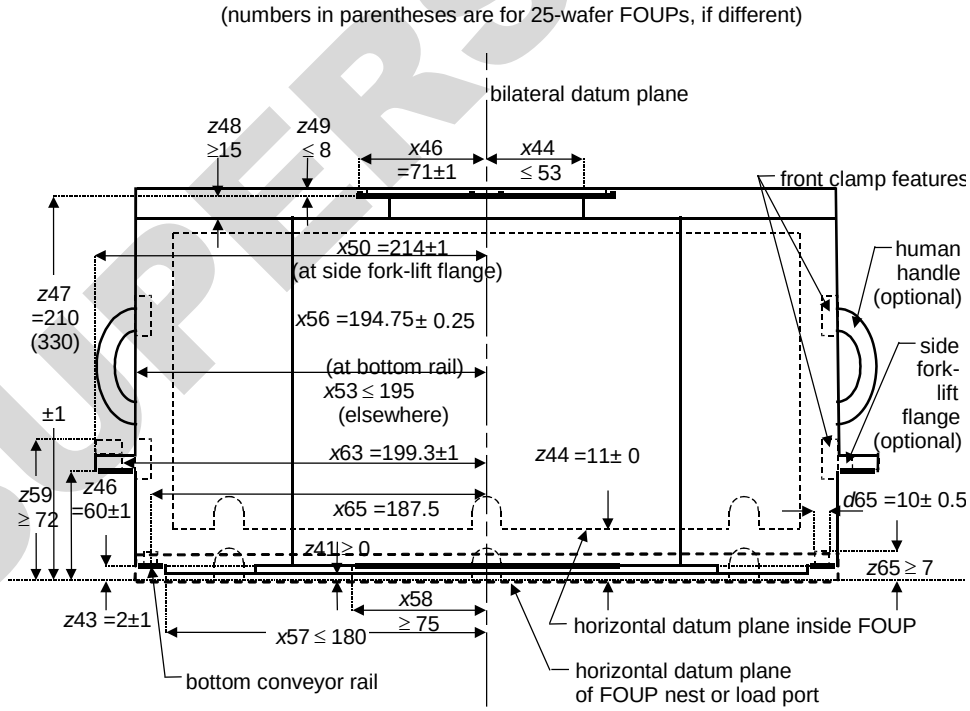

Figure 6
Rear View of FOUP

SUPERSEDED

Documents Document Sharing Hub
Full document details: SEMI E47.1-0306

SUPERSEDED

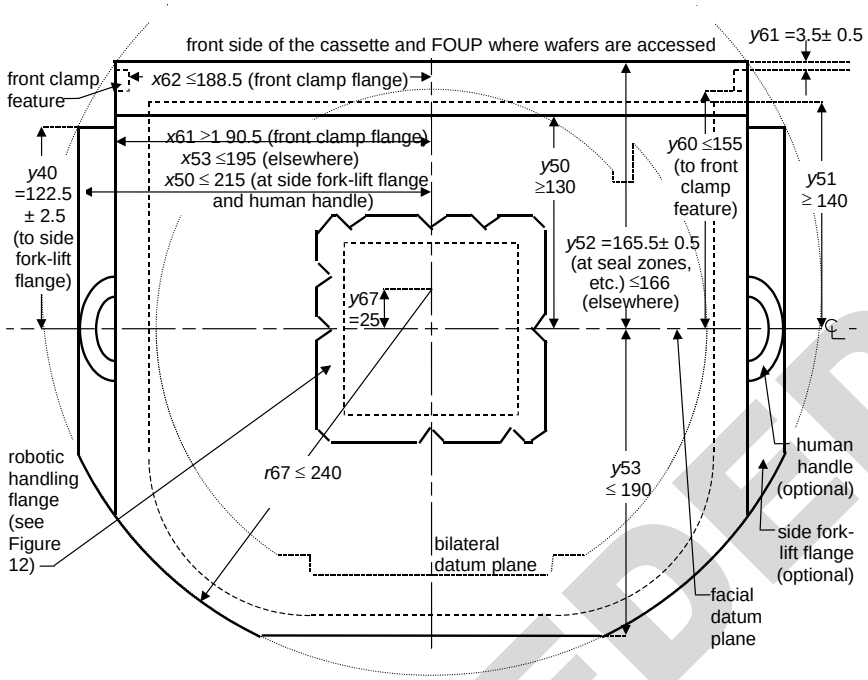

Figure 7
Top View of FOUP

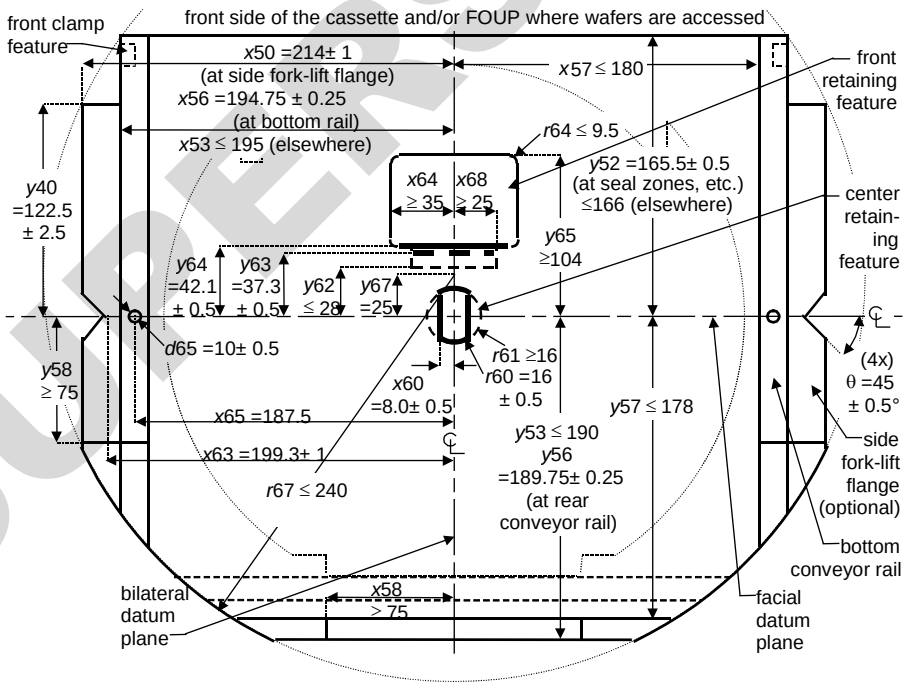

Figure 8
Bottom View of FOUP

Documents
Document Sharing Hub
Full document details: SEMI E47.1-0306

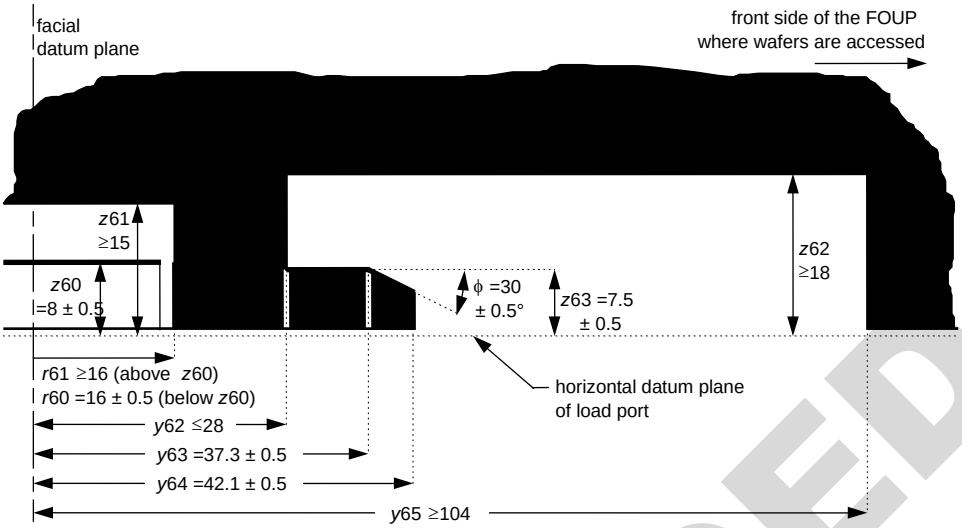

Figure 9
Side View of Retaining Features on Bottom of FOUP

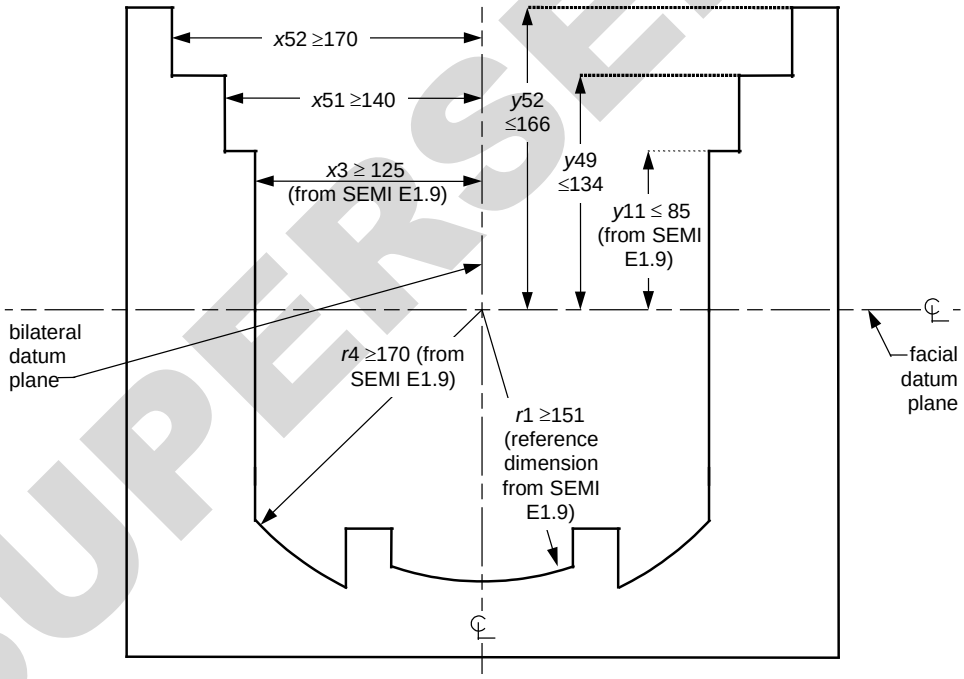

Figure 10
Exclusion Volume Inside FOUP

SUPERSEDED

Documents
Document Sharing Hub
Full document details: SEMI E47.1-0306

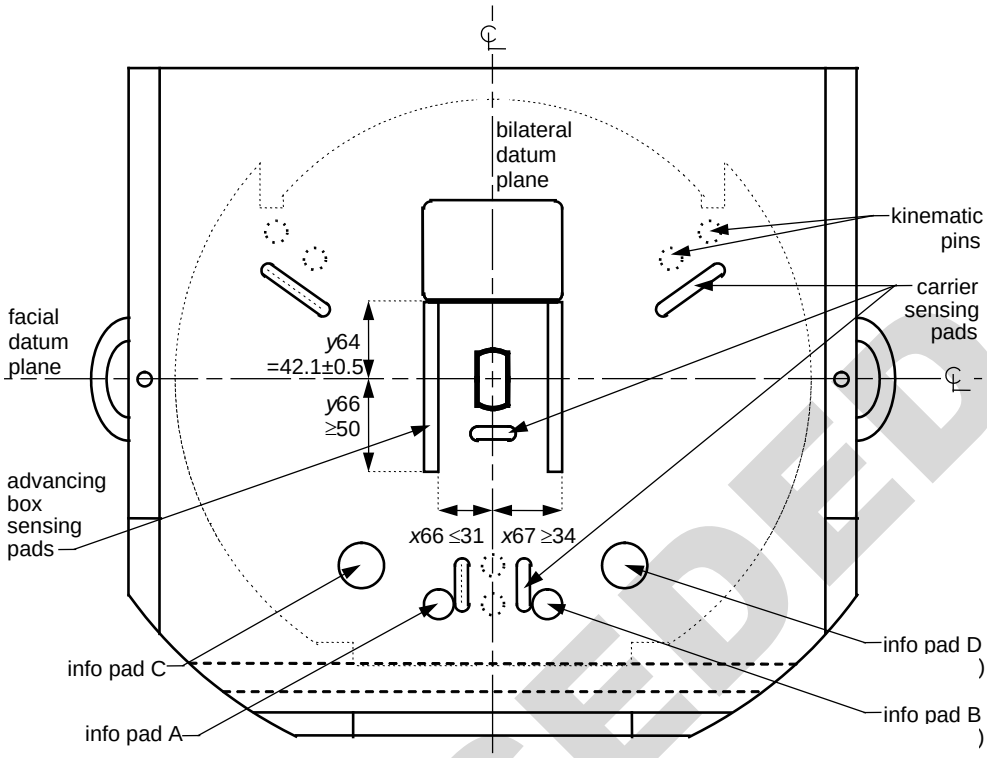

Figure 11
Sensing Pads on Bottom of FOUP

SUPERSEDED

Documents
Document Sharing Hub
Full document details: SEMI E47.1-0306