SEMI E47.1-0701
PROVISIONAL MECHANICAL SPECIFICATION FOR BOXES AND PODS USED TO TRANSPORT AND STORE 300 mm WAFERS

This specification was technically approved by the Global Physical Interfaces & Carriers Committee and is the direct responsibility of the North American Physical Interfaces & Carriers Committee. Current edition approved by the North American Regional Standards Committee on March 22 and April 30, 2001. Initially available at www.semi.org May 2001; to be published July 2001. Originally published in 1997; previously published March 2001.

1 Purpose

1.1 This standard partially specifies the boxes and pods used to transport and store 300 mm wafers (which may or may not be in removable cassettes) in an IC manufacturing facility.

2 Scope

2.1 This standard is intended to set an appropriate level of specification that places minimal limits on innovation while ensuring modularity and interchangeability at all mechanical interfaces. Most of the requirements given in this specification are in the form of maximum or minimum dimensions with very few required surfaces. Only the physical interfaces (other than the door mechanism and kinematic couplings) for boxes and pods are specified; no materials requirements or micro-contamination limits are given. The enclosure specified in this standard can be a sealed minienvironment, but it could also just be a box with well-defined interfaces.

2.2 The box has the following components and subcomponents:

Key:
- • Required feature
- ◊ Optional feature

- • top
- • top handling flange
- • center hole on top handling flange
- ◊ 3 kinematic grooves on top handling flange (optional)
- • interior
  - • cassette (removable or non-removable with supports for 13 or 25 wafers)
  - • wafer capture mechanism
  - • 2 end effector exclusion zones
- • sides
  - ◊ 2 side fork-lift flanges (optional)
  - ◊ 4 side conveyor rails (bottom-opening only) (optional)
  - ◊ ergonomic manual handles (optional)
- • door (on the bottom or front)
- • holes for latch keys that lock the door to the FIMS interface when the door is unlatched from the box (front-opening only)
- • holes for registration pins
- • door sensing pads (front-opening only)
- • bottom
  - • 4 bottom conveyor rails (with the bottom of the front seal zone acting as the fourth rail and the rear rail optional in the front-opening box)
  - • 2 fork-lift pin holes (front-opening only)
  - • 5 carrier sensing pads
  - • center retaining feature (front-opening only)
  - • front retaining feature (front-opening only)
  - • 4 info pads
  - • 2 advancing box sensing pads (front-opening only)
  - • 3 features that mate with kinematic coupling pins and provide a 10 mm lead in
  - ◊ 3 features that mate with kinematic coupling pins and provide a 15 mm lead in (optional)

2.3 This standard is provisional because of concerns about the kinematic coupling pins causing excessive wear on carriers and the usefulness of the robotic handling flanges and conveyor rails. Once box testing is done, this standard should be modified and upgraded from provisional status.

2.4 This standard does not purport to address safety issues, if any, associated with its use. It is the responsibility of the users of this standard to establish appropriate safety and health practices and determine the applicability of regulatory limitations prior to use.

SUPERSEDED

Documents Document Sharing Hub
Full document details: SEMI E47.1-0701

3 Referenced Standards

3.1 *SEMI Standards*

SEMI E1.9 — Provisional Mechanical Specification for Cassettes Used to Transport and Store 300 mm Wafers

SEMI E15 — Specification for Tool Load Port

SEMI E15.1 — Provisional Specification for 300 mm Tool Load Port

SEMI E19 — Standard Mechanical Interface (SMIF)

SEMI E19.5 — Specification for 300 mm Bottom-Opening Standard Mechanical Interface (SMIF)

SEMI E44 — Guide for Procurement and Acceptance of Minienvironments

SEMI E47 — Specification for 150 mm/200 mm Pod Handles 150 mm and 200 mm SMIF Pod Handles

SEMI E57 — Provisional Mechanical Specification for Kinematic Couplings Used to Align and Support 300 mm Wafer Carriers

SEMI E62 — Provisional Specification for 300 mm Front-Opening Interface Mechanical Standard (FIMS)

SEMI S8 — Safety Guidelines for Ergonomics/Human Factors Engineering of Semiconductor Manufacturing Equipment

NOTE 1: As listed or revised, all documents cited shall be the latest publications of adopted standards.

4 Terminology

4.1 *bilateral datum plane* — a vertical plane that bisects the wafers and that is perpendicular to both the horizontal and facial datum planes (as defined in SEMI E57).

4.2 *box* — a protective portable container for a cassette and/or substrate(s) (as defined in SEMI E44).

4.3 *carrier capacity* — the number of substrates that a carrier holds (as defined in SEMI E1.9).

4.4 *cassette* — an open structure that holds one or more substrates (as defined in SEMI E44).

4.5 *facial datum plane* — a vertical plane that bisects the wafers and that is parallel to the front side of the carrier (where wafers are removed or inserted). On tool load ports, it is also parallel to the load face plane specified in SEMI E15 on the side of the tool where the carrier is loaded and unloaded (as defined in SEMI E57).

4.6 *front-opening unified pod (FOUP)* — a box (that complies with SEMI E47.1) with a non-removable cassette (so that its interior complies with SEMI E1.9) and with a front-opening interface (that mates with a FIMS port that complies with SEMI E62).

4.7 *horizontal datum plane* — a horizontal plane from which projects the kinematic-coupling pins on which the carrier sits. On tool load ports, it is at the load height specified in SEMI E15 and might not be physically realized as a surface (as defined in SEMI E57).

4.8 *minienvironment* — a localized environment created by an enclosure to isolate the product from contamination and people (as defined in SEMI E44).

4.9 *nominal wafer center line* — the line that is defined by the intersection of the two vertical datum planes (facial and bilateral) and that passes through the nominal centers of the seated wafers (which must be horizontal when the carrier is placed on the coupling) (as defined in SEMI E57).

4.10 *pod* — a box having a Standard Mechanical Interface (SMIF) per SEMI E19 (as defined in SEMI E44).

4.11 *robotic handling flanges* — horizontal projections on the top of the box for lifting and rotating the box.

4.12 *wafer carrier* — any cassette, box, pod, or boat that contains wafers (as defined in SEMI E15).

5 Ordering Information

5.1 *Intended Use* — This standard is intended to specify 300 mm boxes over a reasonable lifetime of use, not just those in new condition. For this reason, the purchaser needs to specify a time period and the number and type of uses to which the boxes will be put. It is under these conditions that the boxes must remain in compliance with the requirements listed in Section 6.

5.2 *Temperature Ranges* — The purchaser of 300 mm boxes needs to specify two sets of temperatures to which the boxes might be exposed. An operating temperature range is the set of environmental temperatures in which the boxes will remain in compliance with the requirements listed in Section 6. A temporary temperature range is the set of environmental temperatures to which the boxes can be exposed such that when the boxes return to the operating temperature range, the boxes will be in compliance with the requirements listed in Section 6. Limits on exposure times to elevated temperatures should be specified. Also, the purchaser needs to specify a range of temperatures for the wafers and cassettes that might be inserted in the boxes (if the cassettes are removable).

5.3 *Fire Resistance* — The purchaser of 300 mm boxes may need to consider the flammability of the boxes.

SUPERSEDED

Documents
Document Sharing Hub
Full document details: SEMI E47.1-0701

5.4 *Info Pad Configurations* — The purchaser of 300 mm carriers needs to specify the desired info pad configuration (up or down).

6 Requirements

6.1 *External Kinematic Couplings* — The physical alignment mechanism from the cassette to the box (if the cassette is removable) and from the box to the tool load-port (or a nest on a vehicle or in a stocker) consists of features (not specified in this standard) on the top entity that mate with three or six pins underneath as defined in SEMI E57. Most of the dimensions of the box are determined with respect to the three orthogonal datum planes defined in that standard: the horizontal datum plane, the facial datum plane, and the bilateral datum plane. All of the dimensions for the box are bilaterally symmetric about both the bilateral and facial datum planes with the following exceptions:

- The features that mate with the kinematic coupling pins and the box sensing pads are symmetrical only about the bilateral datum plane.
- The front-opening box has a door only on the front and conveyor rails on the left and right sides that are required to extend all the way to the front.
- The orientation notches on the robotic handling flange are different for each of the four sides.

The three features that mate with the kinematic coupling pins must provide a lead-in capability that corrects a box misalignment of up to *r*69 in any horizontal direction.

6.2 *Internal Kinematic Couplings* — If the cassette is removable, the horizontal position of each of the three primary kinematic coupling pins on the inside bottom of the box must be within *r*62 of the horizontal positions of the corresponding pin on which the box is set, so that the vertical datum planes defined by the two sets of kinematic couplings must be nearly identical. Each of the three pins on the inside bottom of the box must be *z*44 higher than the corresponding pin on which the box is set, so that the horizontal datum planes defined by the two sets of kinematic couplings will be parallel and separated by dimension *z*44.

6.3 *Nonremovable Cassettes* — If the cassette is nonremovable, there need not be a kinematic coupling between the box and cassette. However, the interior of such a box must have the interior dimensions of the cassette specified in SEMI E1.9. Many of these dimensions are measured from a horizontal datum plane, so an internal horizontal datum plane is still specified to be *z*44 above the horizontal datum plane under the box.

6.4 *Door* — There are two options for the location of the box door.

6.4.1 In the Bottom-Opening Door Option, the box door is on the bottom of the box (so the door is parallel to the wafers and the horizontal datum plane) and the door and its frame must be designed to mate with a port that conforms to SEMI E19.5.

6.4.2 In the Front-Opening Door Option, the box door is on the front side of the box (corresponding to the front side of the cassette where wafers are accessed so the door is perpendicular to the wafers and parallel to the facial datum plane), and the door and its frame must be designed to mate with a port that conforms to SEMI E62. Specifically, the box door and its frame must have surfaces that mate with the seal zones and the reserved spaces for vacuum application (which includes all of the circles bounded by *r*38 except for the holes for the registration pins at the center of each circle) defined in Sections 5.3 and 5.6 of SEMI E62 (which specifies *r*38). These box door and frame surfaces must be a distance of *y*52 from the facial datum plane and must have a flatness of *y*42. No surface on the box door may project further from the facial datum plane than the door seal zone and the reserved spaces for vacuum application. The door of the front-opening box must also be designed so that when the box is pressed against the FIMS port, both latch keys on the port are inserted to their full length. Furthermore, when the latch keys are turned more than 45° toward the position that unlocks the box door from the box, the latch key holes on the door must be such that the door is not removable from the latch keys.

6.5 *Wafer Capture and Centering* — When the box is closed, the cassette and the wafers must be captured in the box to prevent movement during transport. Wafer capture must include gently pushing the wafers to the rear of the cassette to center them.

6.6 *Internal Dimensions* — If the cassette is removable, the interior of the box (other than the kinematic coupling pins or the devices to capture the cassette and the wafers) must not intrude on any of the cassette domains defined in SEMI E1.9. Furthermore, the cassette must have a clearance of at least *r*68 in any direction while it is being inserted into the box. The interior of any front-opening box must also not intrude on the end effector exclusion zone, and the inside of the door must not intrude more that *y*51 toward the facial datum plane. If the cassette is not removable, the interior of the box between *y*11 and the door opening must not protrude higher than *z*6 above the internal horizontal datum plane and lower than *z*15 above the top nominal wafer plane. Horizontally, it must not protrude closer to the bilateral datum plane than *x*51 between *y*11 and *y*49 or closer than *x*52 between *y*49 and *y*52 (as shown in Figure 10). Dimensions *x*51, *x*52, *y*49, and *y*52 are speci-

SUPERSEDED

Documents Document Sharing Hub
Full document details: SEMI E47.1-0701

fied in Table 1, and *y*11, *z*6, and *z*15 are specified in SEMI E1.9.

6.7 *External Dimensions* — Figures 1 through 4 respectively show the side view, rear view, top view, and bottom view for the bottom-opening box, and Figures 5 through 8 show the same views of the front-opening box. Table 1 defines all of the dimensions. In this and following figures, the heaviest lines are used for surfaces that have tolerances (not surfaces that have only maximum or only minimum dimensions). If a box identification tag is used, it must be located at the bottom rear centered on the bilateral datum plane and must be contained within the maximum outer dimensions of the box.

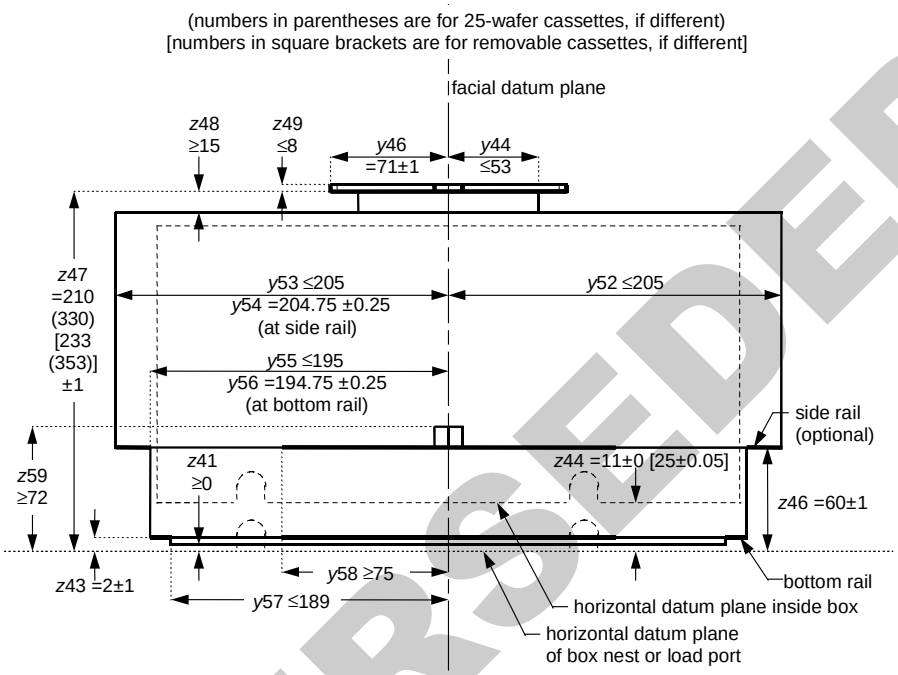

Figure 1
Side View of Bottom-Opening Box

SUPERSEDED

Documents
Document Sharing Hub
Full document details: SEMI E47.1-0701

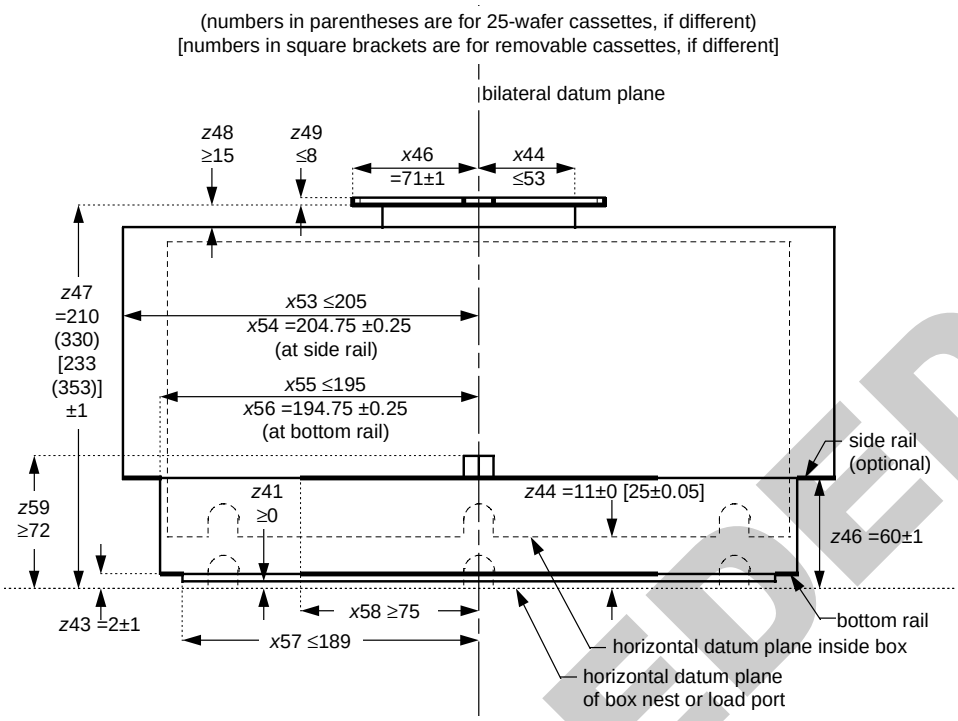

Figure 2
Rear View of Bottom-Opening Box

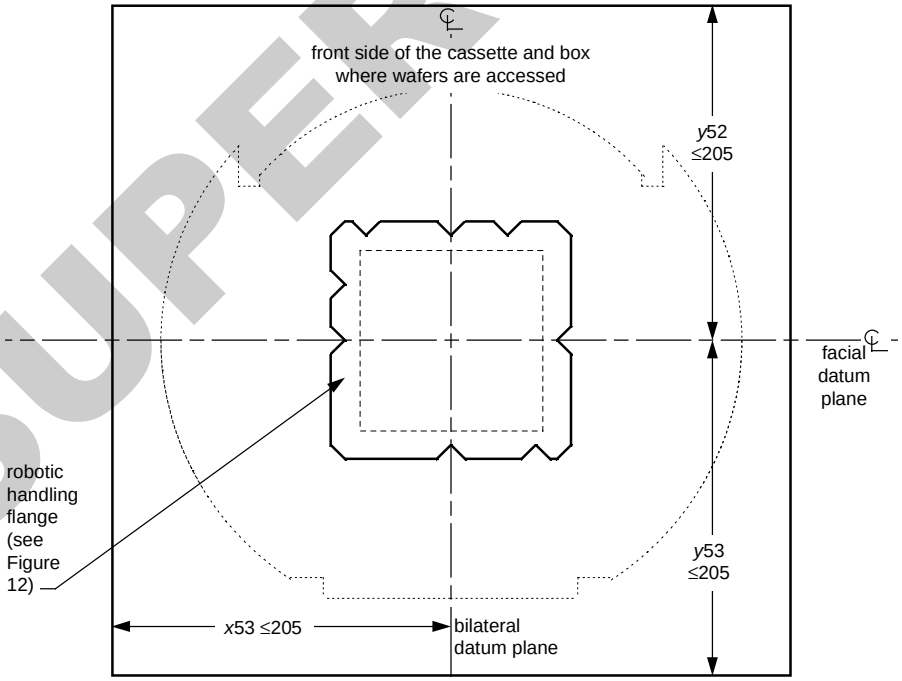

Figure 3
Top View of Bottom-Opening Box

SUPERSEDED

Documents Document Sharing Hub
Full document details: SEMI E47.1-0701

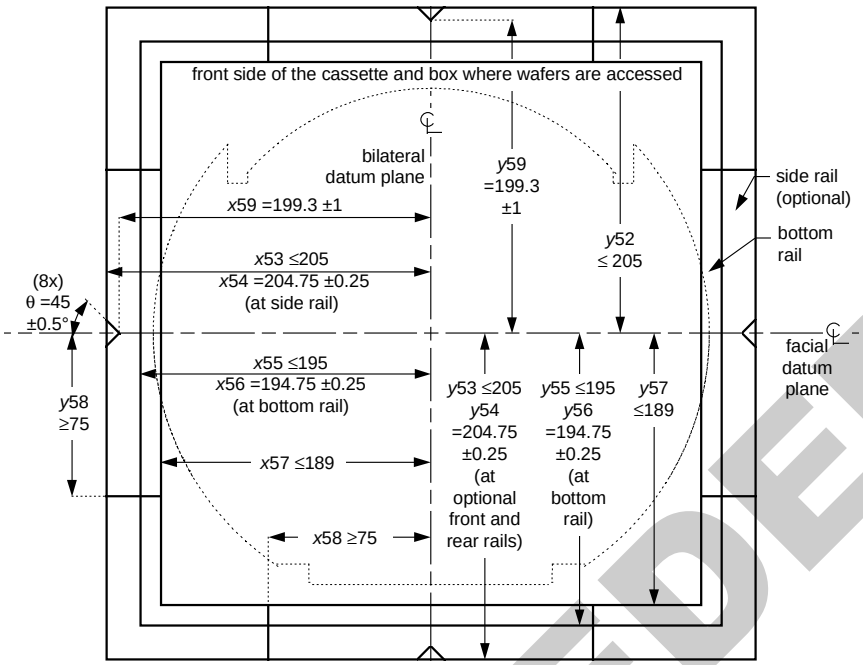

Figure 4
Bottom View of Bottom-Opening Box

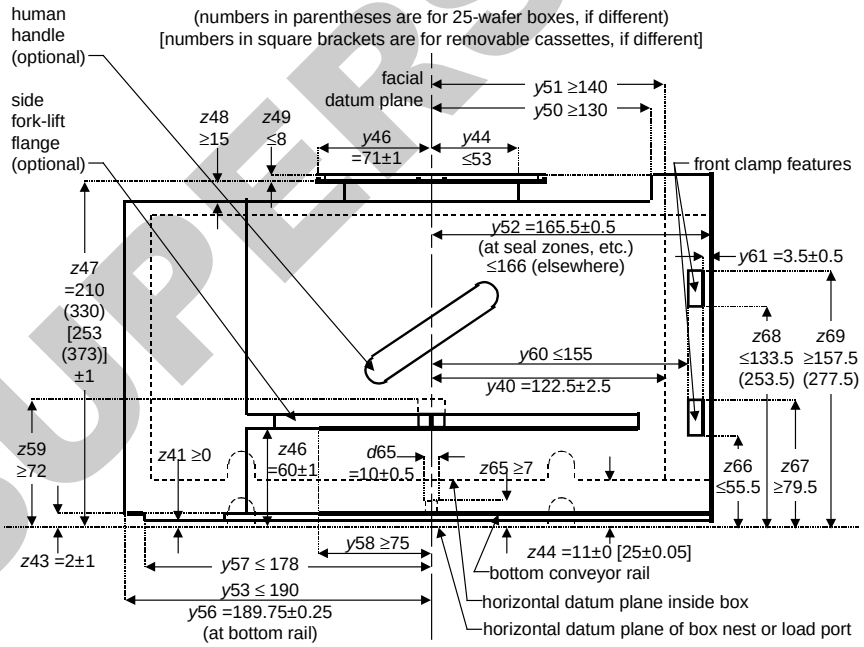

Figure 5
Side View of Front-Opening Box

SUPERSEDED

Documents
Document Sharing Hub
Full document details: SEMI E47.1-0701

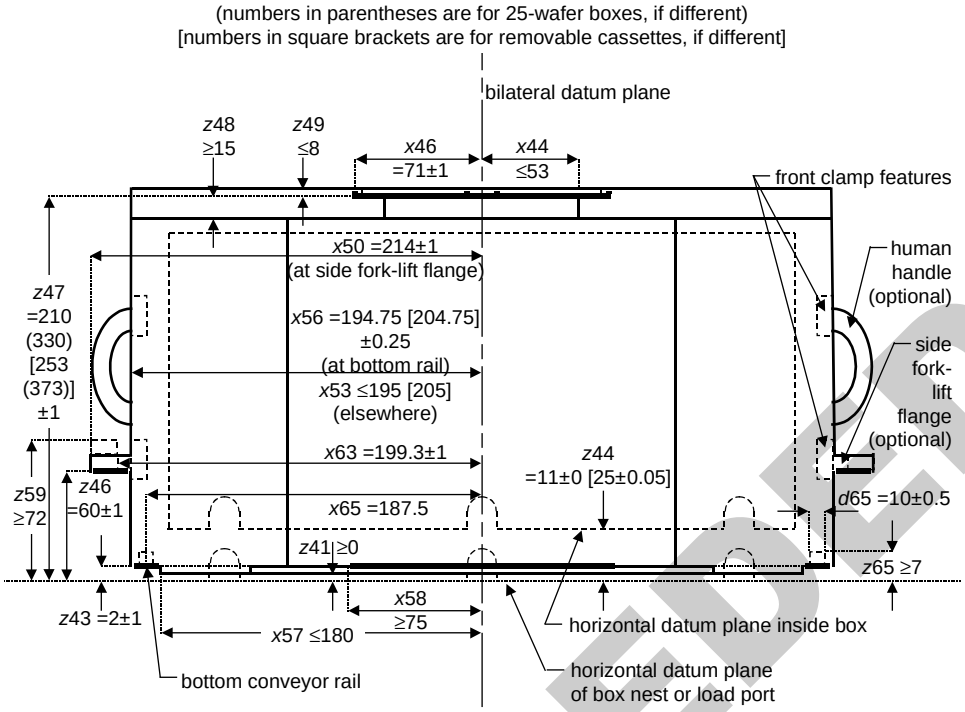

Figure 6
Rear View of Front-Opening Box

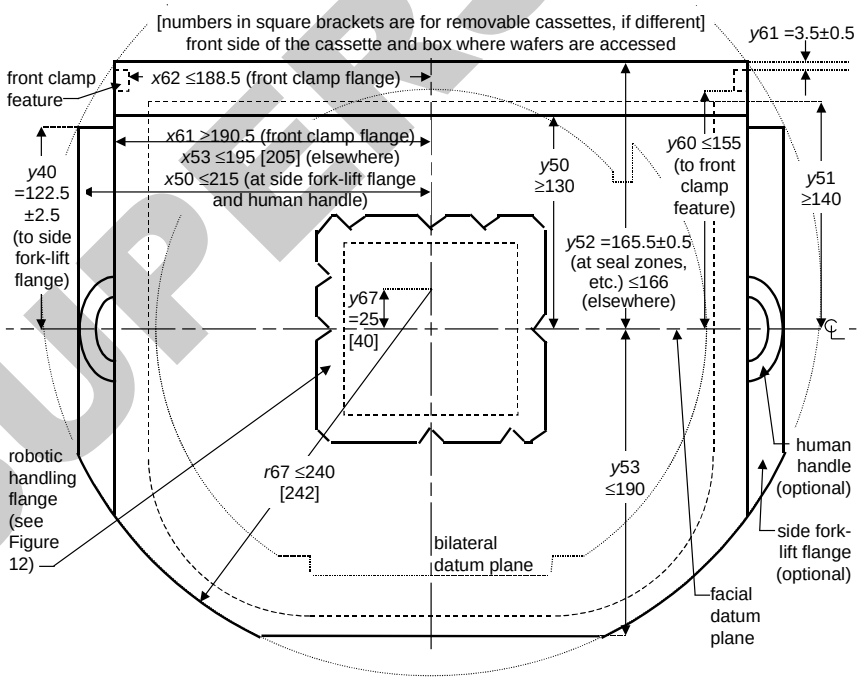

Figure 7
Top View of Front-Opening Box

SUPERSEDED

Documents Document Sharing Hub
Full document details: SEMI E47.1-0701