SEMI E77-1104 (Reapproved 0710)
TEST METHOD FOR CALCULATION OF CONVERSION FACTORS FOR A MASS FLOW CONTROLLER USING SURROGATE GASES

This standard was technically approved by the global Gases Committee. This edition was approved for publication by the global Audits & Reviews Subcommittee on April 30, 2010. Initially available at www.semi.org in June 2010. Originally published in 1998; previously published November 2004.

SUPERSEDED

1 Purpose

1.1 The purpose of this test method is to quantify a nominal average conversion factor from one gas to another for a mass flow controller (MFC) and to quantify the conversion factor as function of flow for an MFC.

2 Scope

2.1 This procedure describes a method to determine the MFC conversion factor and function between two gases.

2.1.1 This document provides a common basis for communication between manufacturers and users.

2.2 The intent of this document is not to suggest any specific testing program, but to specify the test method to be used when testing for parameters covered by this method. Reference operating conditions represent the environmental conditions where the "best" performance can be expected.

NOTICE: This standard does not purport to address safety issues, if any, associated with its use. It is the responsibility of the users of this standard to establish appropriate safety and health practices and determine the applicability of regulatory or other limitations prior to use.

3 Limitations

3.1 It is not practical to evaluate performance under all possible combinations of operating conditions. This test procedure should be applied under laboratory (reference) conditions; its intent is to collect sufficient data to form a judgment of the field performance of the MFC being tested.

3.1.1 The results from this test represent the performance of the specific device tested (i.e., make, model, full scale flow and operating conditions). The results may not apply to devices of different manufacture, model, full scale flow or under different operating conditions.

3.2 This procedure does not apply to pressure based MFC.

4 Referenced Standards and Documents

4.1 None.

5 Terminology

5.1 *Abbreviations and Acronyms*

5.1.1 *CF (gasA/gasB)* — conversion factor from Gas A to Gas B.

5.1.2 *DUT* — device under test

5.1.3 *kPa* — kiloPascal

5.1.4 *MFC* — mass flow controller

5.1.5 *psia* — pounds per square inch absolute

5.1.6 *sccm* — standard cubic centimeters per minute

5.1.7 *slm* — standard liters per minute

5.1.8 *%F.S.* — percent full scale

Documents Document Sharing Hub

Full document details: SEMI E77-1104-0710R

5.2 *Definitions*

5.2.1 *actual flow* — the flow rate as determined by the flow standard used in the test procedure.

5.2.2 *conversion factor* — the ratio of the mass flow-rate of Gas A flowing through an MFC for a given setpoint to the mass flow rate of Gas B flowing through the same MFC and setpoint.

5.2.3 *conversion function* — a relationship that describes the flow dependency of the conversion factor. The conversion function is graphically determined.

5.2.4 *indicated flow* — the flow rate as determined by the output of the DUT.

5.2.5 *mean* — the sum of a group of measurements divided by the number of measurements; average.

5.2.6 *measured value* — the actual flow through a DUT, expressed in sccm or slm.

5.2.7 *measured value, average* — the sum of all readings (both upscale and downscale) for all cycles, at a single setpoint, divided by the number of these readings.

5.2.8 *nameplate gas* — the gas intended to be controlled by the MFC in operation.

5.2.9 *range* — the algebraic difference between the maximum and minimum values.

5.2.10 *setpoint* — the input signal provided to achieve a desired flow, reported as sccm, slm, or percent full scale.

5.2.11 *span* — the full scale range of the DUT.

5.2.12 *surrogate gas* — the gas substituted for the nameplate gas during the calibration process.

5.2.13 *zero drift* — the undesired change in electrical output (i.e., indicated flow), at a no-flow condition, over a specified time period, reported in sccm or slm.

5.2.14 *zero offset* — the deviation from zero at a "no-flow" condition reported in sccm, slm, or mV.

6 Summary of Test Method

6.1 Gas flow and setpoint data are collected for two gases. This data is reduced to quantify the relationship between the flow measurement by the MFC on one gas to another gas.

6.2 This method allows the user to determine the conversion factor between two gases for the MFC and to determine the onset of errors in the MFC calibration due to the conversion factor/function effects.

7 Interferences

7.1 The accuracy rating of the measuring equipment shall be superior to that of the device under test (DUT). Preferably the measuring equipment will have an accuracy that is four times better than the DUT. Calibration equipment must have a valid calibration certificate.

7.2 Take care when using test instruments with a specified accuracy expressed in percent of full scale.

7.3 Installation effects on the flow should be minimized. Monitor pressure upstream of the DUT. to ensure that flow variations due to pressure are minimized.

7.4 Verify electrical signals directly at the DUT connector to ensure that the signals at the DUT. and standard agree with the signals at the data recording equipment.

7.5 Certain gases will contaminate the DUT. This test should be considered a destructive test in such cases.

7.6 All electrical measurements should be read on devices with at least 4.5 digits of resolution. These devices must have valid calibration certifications.

7.7 The device mounting position must be in accordance with the manufacturer's specifications.

8 Apparatus (see Figure 1)

8.1 *Flow Standard* — A device or system that accurately measures the flow and reports the actual flow.

SUPERSEDED

Documents
Document Sharing Hub
Full document details: SEMI E77-1104-0710R

8.2 *Data Acquisition System* — The system that measures the electrical signals from the device under test. The data acquisition system may also read the signals from the flow standard, record test data and control the test sequence.

8.3 *Temperature Probe* — A device to measure the temperature of the flowing gas.

8.4 *Three-Way Valve* — A special valve to switch the system from one gas source to another.

8.5 *Manual Isolation Valves* — Valves that will positively shut off the gas line.

8.6 *Pressure Regulator* — A device that regulates gas pressure to a set value.

8.7 *Pressure Transducer* — An instrument to measure the gas pressure and report it as an electrical signal.

9 Materials

9.1 *Clean, Dry* N_2 — With 99.999% minimum purity, to be used for purging.

9.2 Test Gas "A"

9.3 Test Gas "B"

10 Safety Precautions

10.1 This test method may involve hazardous materials, operations, and equipment. This test method does not purport to address the safety considerations associated with its use. It is the responsibility of the user to establish appropriate safety and health practices and to determine the applicability of regulatory limitations before using this method.

10.2 Follow the manufacturer's specifications and instructions for installation and operation whenever possible. Note any exceptions in the test report.

11 Test Specimen

11.1 Allow all components in the test apparatus to warm up following the manufacturer's specification.

11.2 Take necessary steps when switching gases to ensure that only the desired gas is in the DUT and flow standard at the time the test is performed.

12 Preparation of Apparatus

12.1 Locate the DUT in the test environment to stabilize temperature for 24 hours prior to warm up.

12.2 The reference operating conditions shall be as follows:

12.2.1 *Ambient Temperature* — 23 ± 2°C

12.2.2 *Gas Temperature* — Same as ambient. In the case of a condensible gas, the gas temperature should be maintained as a gradient, with highest temperature at the outlet end of the test set up, and slightly reduced temperatures back to the source. This will ensure that condensing vapors do not accumulate in the test set up. Gradient should simulate actual process parameters where the MFC will be installed.

12.2.3 *Ambient Pressure* — 101.3 kPa (+4.7 or −15.3 kPa)

12.2.4 *Gas Pressure, Inlet* — 172 ± 34 kPa unless the gas is not capable of delivering this pressure, then normal fab operating conditions should be observed.

12.2.5 *Gas Pressure, Outlet* — <80 kPa

12.2.6 *Relative Humidity* — 40% ± 5%, non-condensing (suggestion: record if outside this range).

12.2.7 Magnetic Field — ≤50 µT

12.2.8 Electromagnetic Field — ≤100 µV/m

12.2.9 *Vibration* — ≤0.5 m/s at 50 to 200 Hz

12.3 Following the conditioning period (see ¶ 12.1), warm up the device according to manufacturer's specifications.

SUPERSEDED

Documents Document Sharing Hub
Full document details: SEMI E77-1104-0710R

12.4 Perform an adequate nitrogen purge to ensure all previous gases and moisture have been removed from the system. Prior to corrosive gas testing, a cyclic pump and purge operation is recommended, alternately backfilling with nitrogen, and evacuating the test manifold.

12.5 Leak check the manifold, using available methodologies to verify the test system leak integrity. Introduce the test gas at a sufficient rate and time to ensure the test apparatus is completely filled with the test gas and only the test gas.

12.6 Record the zero offset with line pressure inside the MFC to best simulate normal operating conditions. Line pressure during testing is to be 170.30 kPa (24.7 psia) unless safety practices for the gas under test dictate that a lower line pressure be used.

NOTE 1: In addition, if this test is performed on hazardous gases, bleeding off gas pressure to obtain atmospheric pressure inside the MFC may not be easy to do.

12.7 Command 100%, and establish flow, then close the downstream isolation valve; then close the upstream isolation valve (see Figure 1).

12.8 With both isolation valves closed, and a 100% setpoint wait until the pressure drop across the MFC is dissipated, ensuring a "no flow" condition through the MFC. Dissipation of the pressure across the MFC is indicated when the indicated flow drops to a steady state value near zero.

12.9 After the electrical output signal has stabilized for at least three minutes, record the MFC zero offset in Table 1.

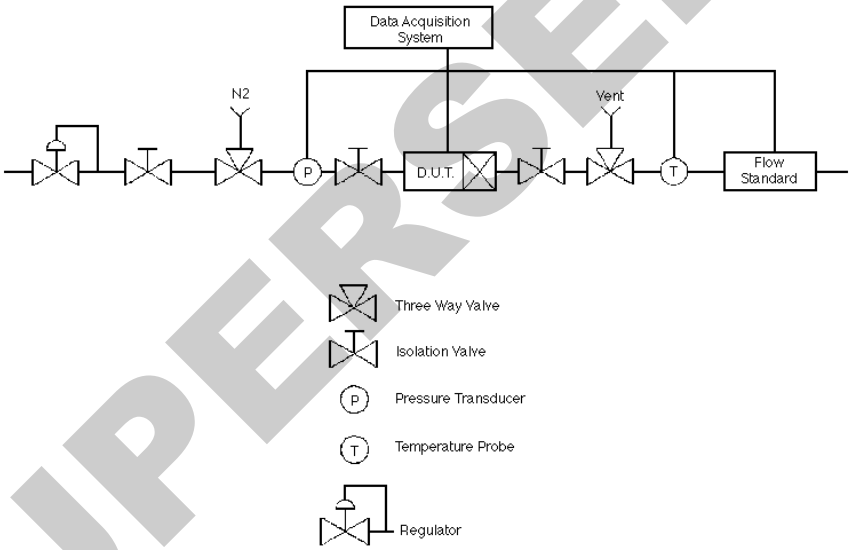

Figure 1
Mass Flow Controller Test Fixture

SUPERSEDED

Documents
Document Sharing Hub
Full document details: SEMI E77-1104-0710R