SEMI F25-0697
PARTICLE SPECIFICATION FOR GRADE 10/0.2 OXIDANT SPECIALTY GASES

1 Purpose

The purpose of this document is to set a maximum permissible particle concentration for 10/0.2 grade oxidant specialty gases and to describe a reference method for its verification.

2 Scope

This document applies only to oxidant gases delivered through specialty gas systems at pressures up to 8×10^5 Pa (8 atmospheres). This method is not suitable for direct sampling from high pressure cylinders at pressures above 8×10^5 Pa (8 atmospheres). This document applies only to the following gas:

Oxygen (O_2)
Nitrous Oxide (N_2O)
Nitrogen Trifluoride (NF_3)

3 Referenced Documents

3.1 *SEMI Document*

SEMI C6.2 — Particle Specification for Grade 20/0.02 Oxygen Delivered as Pipeline Gas

3.2 *Other Document*

JIS B 9921 — Japanese Industrial Standard (1989), "Light Scattering Automatic Particle Counter"

4 Terminology

4.1 *Variables*

V_{Mi}=	Volume of the ith sample interval of the system gas
V_{Bi}=	Volume of the ith sample interval of the background
X_{Mi}=	Concentration of particles observed in the ith sample of interval of the system gas
X_{Bi}=	Concentration of particles observed in the ith sample of interval of the background
N_M=	Number of sample intervals of the system gas
N_B=	Number of sample intervals of the background
$\overline{X}_M$ =	Average observed concentration of counts in the system gas sample
$\overline{X}_B$ =	Average observed concentration of background counts
$\overline{X}_C$ =	Calculated concentration of particles in the system gas
S_M=	Standard deviation of $\overline{X}_M$
S_B=	Standard deviation of $\overline{X}_B$
S_C=	Standard deviation of $\overline{X}_C$

4.2 *gas sample volume (V_{Mi}, V_{Bi})* — The volume of the sample interval, expressed in standard liters at standard conditions, 0°C (32°F) and 1×10^5 Pa (1 atmosphere) pressure. Standard cubic feet (SCF) is defined at 21.1°C (70°F) and 1×10^5 Pa (1 atmosphere) pressure.

4.3 *average observed concentration of counts ($\overline{X}_M$, $\overline{X}_B$)* — The average concentration of counts, i.e.:

$$\overline{X}_M = \frac{\Sigma X_{Mi}}{N_M} \qquad \overline{X}_B = \frac{\Sigma X_{Bi}}{N_B}$$

4.4 *calculated concentration of particles ($\overline{X}_C$)* — The concentration of particles in the system gas obtained by correcting the observed concentration in the system gas for the observed concentration in the background, i.e.:

$$\overline{X}_C = \overline{X}_M - \overline{X}_B$$

4.5 *standard deviation (S_M, S_B, S_C)* — A statistical measure of the spread of the concentration of the counts or particles. The first two are obtained from the interval and average concentrations and the number of intervals, i.e.:

$$S_M = \sqrt{\frac{(X_{Mi} - \overline{X}_M)^2}{(N_M - 1)}}$$

$$S_B = \sqrt{\frac{(X_{Bi} - \overline{X}_B)^2}{(N_B - 1)}}$$

NOTE: The third is obtained from the first two, i.e.:

$$S_C = \sqrt{S_M{}^2 + S_B{}^2}$$

5 Requirements

5.1 *Maximum Permissible Particle Concentration* — 10 particles per 25 standard liters as determined by the instrument specified in Section 6.

5.2 The specification will be considered met if the calculated concentration of particles plus 2 times the standard deviation does not exceed 10 particles per 25 standard liters, i.e.:

$$\overline{X}_C + 2 \times S_C \leq 10 \text{ particles/25 standard liters}$$

SUPERSEDED

Documents Document Sharing Hub
Full document details: SEMI F25-0697

6 Apparatus

Particle Counter — An instrument suitable for counting particles in compressed oxidant gases at a pressure of up to 8×10^5 Pa (8 atmospheres) with a 50% counting efficiency at 0.2 micrometer or smaller. The counting efficiency should reach 90% at 0.3 micrometer or smaller. The resolving power of the instrument near 0.2 micrometer should be no worse than 10%. The counting efficiency is determined by a calibration at 1×10^5 Pa (1 atmosphere) pressure using polystyrene latex spheres in an inert gas and a reference particle counter with a proven counting efficiency of not less than 95% at 0.2 micrometer.

NOTE: Suitable test methods for determining counting efficiency and resolving power are contained in Japanese Industrial Standard JIS B 9921 (1989), "Light Scattering Automatic Particle Counter". More sensitive particle counters result in a higher measured particle concentration.

7 Test Method

NOTE: The details of the sampling configuration, measurement procedure, and instrument calibration procedure and frequency must be agreed upon by the user and supplier, taking into account good engineering practice. Material safety data sheets should be referred to for safe handling of specialty gases.

7.1 Determine the average observed concentration of counts in the background ($\overline{X}_B$) by passing nitrogen, believed to be free of particles 0.2 micrometer or more in diameter, through the instrument and recording the total number of counts. The nitrogen purge assembly for performing this test, using a filter which removes particles in this size range, is shown in Figure 1. Count a minimum of 3 equal intervals, each of at least 25 standard liters (0.95 SCF), or 30 minutes, whichever is greater. Calculate $\overline{X}_B$ as defined in Section 4. $\overline{X}_B$ must not exceed 2 counts per 25 standard liters.

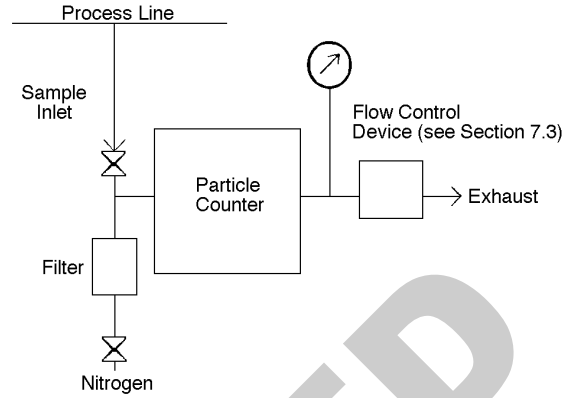

Figure 1
Schematic Diagram of Configuration for Obtaining Particle Samples from Oxidant Specialty Gas Systems

7.2 The sampling point should be near the point of use, and sampling lines should be clean, free of combustible substances, and as short as possible.

7.3 The sampling system configuration is shown in Figure 1. The specialty gas system should be connected through a sample valve directly to the particle counter, a pressure gauge, and a flow control device (FCD). When sampling is performed using wall tap sample ports, the aspiration efficiency should be checked using the method described in Related Information 1. The sampling system should contain minimum dead volume and sample tube length. All components in the sampling system should be leak tight and cleaned in accordance with good engineering practice. A leak check of the system should be performed in accordance with normally accepted practice. The FCD may be part of the particle counter. The particle counter should be maintained at the pressure of the gas system. The FCD can be a metering valve and a flow meter or a critical orifice. The exhaust line should be leak tight and piped to an appropriate exhaust system. The exhaust line diameter should be large enough to produce no more than 1×10^4 Pa (1.5 psi) pressure drop during purge and sample flow.

NOTE: The alternative sampling configurations described in SEMI C6.2 can also be used for oxygen.

7.4 Using the high purity nitrogen system shown in Figure 1, purge the sampling system and particle counter for at least 5 minutes at the instrument manufacturer's specified flow rate. The exact purge time should take into account the reactivity of the gas and should be sufficient to purge the entire exhaust line. The purging must be performed before oxidant gas is introduced into the sampling system and after completion of the measurement. The valve leading from

SUPERSEDED

Documents
Document Sharing Hub
Full document details: SEMI F25-0697