SEMI F70-0320
TEST METHOD FOR DETERMINATION OF PARTICLE CONTRIBUTION OF GAS DELIVERY SYSTEM

This Standard was technically approved by the Gases Global Technical Committee. This edition was approved for publication by the global Audits and Reviews Subcommittee on December 8, 2016. Available at www.semiviews.org and www.semi.org in May 2017; originally published March 2002; previously published June 2011.

NOTICE: The designation of SEMI F70 was updated during the 0320 publishing cycle to reflect the creation of SEMI F70.1.

1 Purpose

1.1 The purpose of this Document is to provide a standardized methodology and procedure for measuring the particle contribution performance of a gas delivery system in terms of number of particles added to gas flowing through the system. This standardized procedure is intended to be used commonly by the gas delivery system suppliers, equipment suppliers, and end-users.

2 Scope

2.1 This Test Method applies to surface mount and conventional gas delivery systems used in semiconductor manufacturing equipment.

NOTICE: SEMI Standards and Safety Guidelines do not purport to address all safety issues associated with their use. It is the responsibility of the users of the Documents to establish appropriate safety and health practices, and determine the applicability of regulatory or other limitations prior to use.

3 Limitations

3.1 This Test Method is limited to a maximum flow rating of 200 standard liters per minute (slm) because this Test Method is intended for point-of-use components used in the semiconductor equipment.

3.2 The dynamic (pulse) test may be excluded for production-type testing and certification of gas delivery systems because this test is time-intensive and not suitable for production environment.

4 Referenced Standards and Documents

4.1 *SEMI Standards and Safety Guidelines*

SEMI C57 — Specification for Argon

SEMI C59 — Specification for Nitrogen

4.2 *ISO Standards*[1]

ISO 14644-1 — Cleanrooms and Associated Controlled Environments – Part 1: Classification of Air Cleanliness by Particle Concentration

ISO 21501-4 — Determination of Particle Size Distribution – Single Particle Light Interaction Methods – Part 4: Light Scattering Airborne Particle Counter for Clean Spaces

NOTICE: Unless otherwise indicated, all documents cited shall be the latest published versions.

5 Terminology

5.1 *Abbreviations and Acronyms*

5.1.1 *CNC* — condensation nucleus counter

[1] International Organization for Standardization, ISO Central Secretariat, 1, ch. de la Voie-Creuse, CP 56, CH-1211 Geneva 20, Switzerland; Telephone: +41.22.749.01.11, Fax: +41.22.733.34.30, http://www.iso.org

Documents Document Sharing Hub

Full document details: SEMI F70-0320

5.1.2 *LPC* — laser particle counter

5.1.3 *MFC* — mass flow controller

5.1.4 *slm* — standard liters per minute

5.2 *Definitions*

5.2.1 *background counts* — particle counts contributed by the test apparatus (including false counts) with the spool piece in the place of the test object.

5.2.2 *counting efficiency* — the ratio of the particle concentration calculated from the particle counts to the actual particle concentration in the sampled gas for particles equal to or larger than a given particle size.

5.2.3 *design flow* — flow normally applied to the gas delivery system.

5.2.4 *dynamic (pulse) test* — a test performed to determine particle contribution as a result of actuation of valves in the gas delivery line or system.

5.2.5 *false counts* — particle counts contributed by electrical noise or by other events and not particles in the sampled gas.

5.2.6 *gas delivery system* — a system installed in semiconductor manufacturing equipment comprised of one or more lines to supply process and carrier gases to reactors. The system typically includes tubing, fittings, valves, filters, mass flow controllers and regulators. These components can be surface mount or conventional type.

5.2.7 *minimum counting particle diameter* — a predefined minimum diameter of particles to be counted in this Test Method.

5.2.8 *particle counts* — a counted value from a laser particle counter (LPC) or condensation nucleus counter (CNC) obtained for particles larger than or equal to the minimum counting particle diameter.

5.2.9 *sample flow* — the volumetric flow through the particle counter.

5.2.10 *sampling time* — the time span over which particle counts are recorded.

5.2.11 *standard liters per minute (slm)* — the gas volumetric flow measured in liters per minute at 0°C and 101.3 kPa (1 atm).

5.2.12 *spool piece* — a null component consisting of a straight piece of electropolished tubing or like object and appropriate fittings used in place of the test system to establish the background.

5.2.13 *static test* — a test performed to determine particle contribution with all components in the gas delivery line or system in open position.

5.2.14 *test flow* — the volumetric flow through the test system at test pressure and temperature.

5.2.15 *test pressure* — the pressure immediately downstream of the system under test.

6 Required Apparatus

6.1 *Filter* — Filters with the following performance specified by the manufacturer.

Table 1 Specifications of Filter Used In The Test Apparatus

Characteristic	*Performance*	*Condition*
Filtration Efficiency	9 log	referenced at most penetrating particle size
Flow Rate	300 slm	inlet pressure: 0.34 MPa

6.2 *Tubing Material* — 6.35 mm (1/4 in.) or 9.52 mm (3/8 in.) SUS 316L electropolished tubing.

Documents
Document Sharing Hub
Full document details: SEMI F70-0320

6.3 *Particle Counter* — The particle counter may be either LPC or CNC of which the minimum counting particle diameter is 0.1 µm or smaller, and has the following performance as specified by ISO 21501-4. Particle counter manufacturer's operation and maintenance manuals should be consulted when performing this test.

Table 2 Counting Efficiency

Size Requirements for Polystyrene Latex Standard Particles	*Counting Efficiency*
Minimum countable particle diameter of the counter	50 ± 20%
≤2.0 × Minimum countable particle diameter of the counter	100 ± 10%

6.3.1 *False Count* — Equal to or less than 1 in 5 minutes.

6.3.2 *Acceptable Error of Flow Rate* — ±5%.

6.4 *Sampler* — A system used to perform partial sampling of the gas stream exiting the test system, that consists of a diffuser equipped with a pressure reducing device in which gradual expansion to atmospheric pressure occurs and a sample probe. The sampler shall be designed to obtain isokinetic sampling. The average velocity of gas flowing through the sample probe should approximate the average velocity in the external tubing in which the sample probe is inserted. The sample probe overlap with the external tube shall be of appropriate length, and it shall be confirmed before use that the surrounding atmospheric gas is not drawn in the sample. For more details on isokinetic sampling, refer to Related Information 3.

7 Test Condition

7.1 *Test Gas* — Ultra high purity (UHP), nitrogen (N_2) (99.9995% purity as specified in SEMI C59), or argon (Ar) (99.999% purity as specified in SEMI C57).

7.2 *Temperature* — Room temperature (between 18°C and 26°C).

7.3 *Environment* — ISO 14644-1 Class 5 or better (equivalent to Class 100 or better in now-cancelled FED-STD-209E).

8 Preparation of Apparatus

8.1 All components must meet quality requirements (dimensional, functional, etc.) as established and controlled by manufacturers prior to testing. Care should be exercised in handling of components to maintain manufacturer's specifications.

8.2 Set up apparatus and the gas supply system as shown in Figure 1.

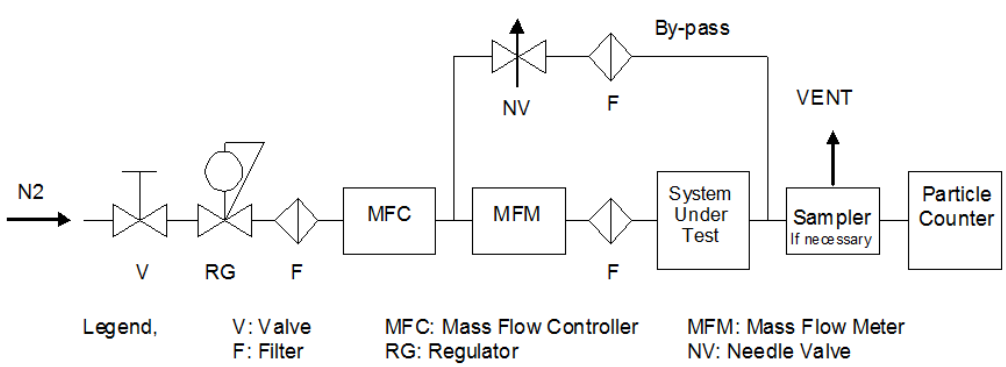

Figure 1
Test Set Up Basic Flow Diagram

Documents Document Sharing Hub
Full document details: SEMI F70-0320

8.3 If the test flow is less than the sample flow required by the particle counter, add make up gas (N_2 or Ar) to fulfill the sample flow as shown in Figure 2. Set the mass flow controller (MFC) in the make-up line to meet the flow requirements of the particle counter.

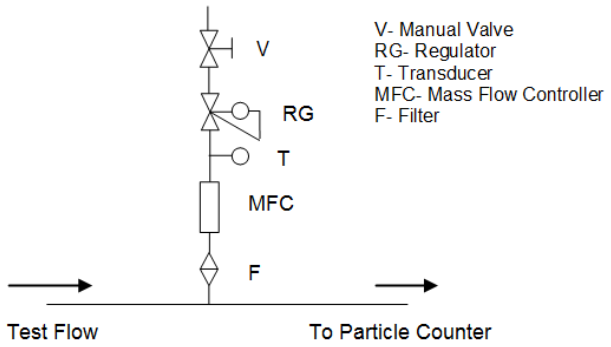

Figure 2
Full Sampling When Test Flow ≤ Sample Flow

8.4 If the test flow is higher than the sample flow required by the particle counter, use the sampler for partial sampling (see Figure 3). To establish the test flow and obtain an isokinetic condition, it is required to adjust the MFC in the test set up and the NV on the by-pass line. The by-pass line is required to have a capability to handle the maximum test flow when the valves in the system under test are closed during the pulse test.

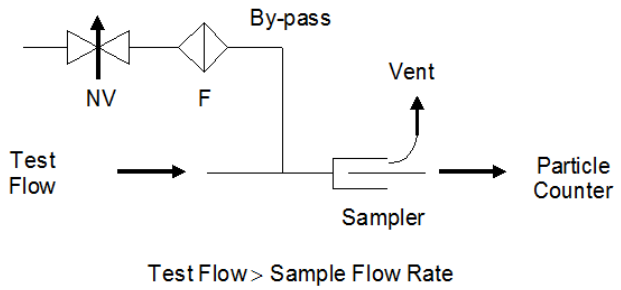

Figure 3
Partial Sampling

9 Procedure

9.1 A typical gas delivery system configuration is shown in Figure 4. The following test procedure shall be interpreted to apply to the actual test system and recorded by the operator.

Documents
Document Sharing Hub
Full document details: SEMI F70-0320