SEMI G90-0811 (Reapproved 0318)
SPECIFICATION FOR 300 mm WAFER COIN-STACK TYPE SHIPPING CONTAINER USED FOR TEST AND PACKAGING PROCESSES

This Standard was technically approved by the Assembly & Packaging Global Technical Committee. This edition was approved for publication by the global Audits and Reviews Subcommittee on August 18, 2017. Available at www.semiviews.org and www.semi.org in March 2018; originally published August 2011.

1 Purpose

1.1 The purpose of this Document is to standardize the specifications for 300 mm wafer coin-stack type shipping container used for test and packaging processes for wafers.

2 Scope

2.1 This Specification defines the dimensions of container (see ¶ 5.1.1) and requirements for securing the interface between container and processing equipment or wafer transportation equipment.

2.2 This Document specifies the requirements for wafer spacers used for separation of wafers and for a cushion material used for wafer protection.

2.3 This Document specifies the electrical characteristics and requirements for hazardous substance for the material of container.

NOTICE: SEMI Standards and Safety Guidelines do not purport to address all safety issues associated with their use. It is the responsibility of the users of the documents to establish appropriate safety and health practices, and determine the applicability of regulatory or other limitations prior to use.

3 Limitations

3.1 This Specification does not specify the cleanliness level of container.

4 Referenced Standards and Documents

4.1 *SEMI Standards and Safety Guidelines*

SEMI G59 — Test Method for Measurement of Ionic Contamination on Leadframe Interleafing and the Contamination Transferred from the Interleafing to the Leadframes

4.2 *European Community Directive*[1]

1994/62/EC — Packaging and Packaging Waste

4.3 *IEC Standard*[2]

IEC 60093 — Methods of Test for Volume Resistivity and Surface Resistivity of Solid Electrical Insulating Materials

NOTICE: Unless otherwise indicated, all documents cited shall be the latest published versions.

5 Terminology

5.1 *Definitions*

5.1.1 *coin-stack type shipping container ('container')* — a container in which wafers are horizontally stored for shipment.

5.1.2 *container main body ('main body')* — bottom material on which wafers and other materials are stacked.

[1] *Official Journal of the European Union*, February 13, 2003 Available for downloading from the following: http://164.36.164.20/sustainability/pdfs/finalrohs.pdf

[2] International Electrotechnical Commission, 3 rue de Varembé, Case Postale 131, CH-1211 Geneva 20, Switzerland; Telephone: +41.22.919.02.11, Fax: +41.22.919.03.00, http://www.iec.ch

SUPERSEDED
Documents Document Sharing Hub
Full document details: SEMI G90-0811-0318R

5.1.3 *container lid ('lid')* — a material used to prevent the wafers from jumping out of main body and from being contaminated.

5.1.4 *cushion material ('cushion')* — an in-between material inserted main body, wafers and lid.

5.1.5 *wafer retaining wall of main body ('wafer retaining wall')* — a circular wall located on main body in order to retain the wafers placed on main body.

5.1.6 *wafer spacer ('spacer')* — a material inserted between the adjacent wafers to prevent damage caused by friction.

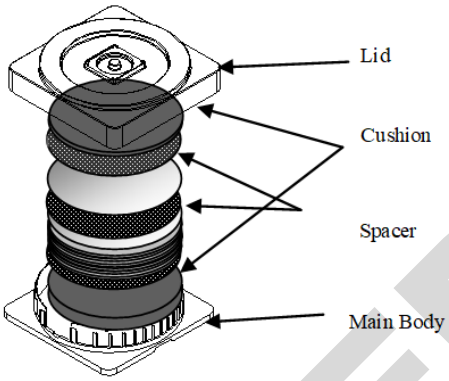

Figure 1
Composition of Container

6 Requirements

6.1 *Composition of Container* — As illustrated in Figure 1, container shall be composed of main body, lid, cushions and spacers.

6.2 *Dimensions of Container*

6.2.1 Maximum height of container shall be 90 mm when container is fully assembled.

6.2.2 The dimensions of main body shall be as shown in Figure 2 and Table 1.

SUPERSEDED

Documents
Document Sharing Hub
Full document details: SEMI G90-0811-0318R

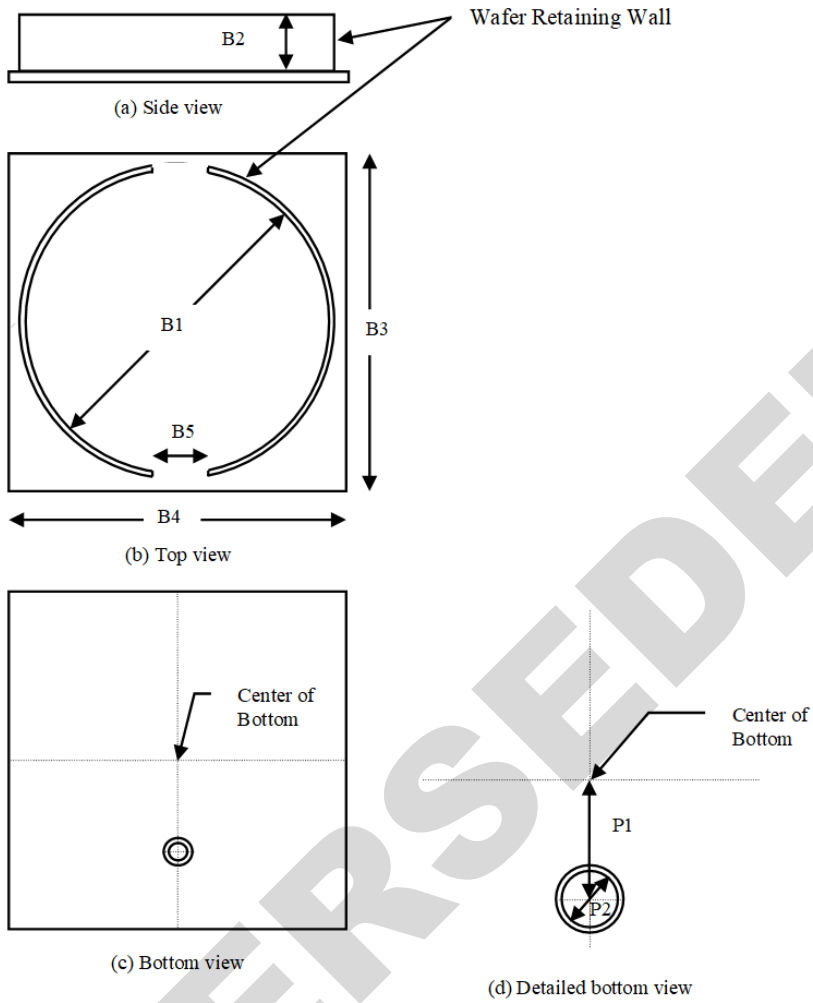

Figure 2
Main Body

6.2.3 A hole for positioning pin shall be provided at location shown in Figure 2 (d) so that the container can be positioned on the processing equipment by engagement with a pin of the equipment.

Table 1 Dimensions of Main Body

Location	*Description*	*Dimension*
B1	Inside diameter of wafer retaining wall	302 to 305 mm
B2	Height of wafer retaining wall	Not specified
B3	Outer dimension (vertical)	Max. 328 mm (328 mm is recommended)
B4	Outer dimension (horizontal)	Max. 328 mm (328 mm is recommended)
B5	Width of opening space in wafer retaining wall	75 to 80 mm
P1	Location of the hole from the center of bottom	87.5 mm ± 0.3 mm
P2	Diameter of hole for positioning pin	16.0 mm

6.2.4 The dimension of lid shall be as shown in Figure 3 and Table 2.

SUPERSEDED

Documents Document Sharing Hub
Full document details: SEMI G90-0811-0318R