SEMI G92-0315 (Reapproved 1220)
SPECIFICATION FOR TAPE FRAME CASSETTE FOR 450 mm WAFER

This Standard was technically approved by the 3D Packaging and Integration Global Technical Committee. This edition was approved for publication by the global Audits and Reviews Subcommittee on August 26, 2020. Available at www.semiviews.org and www.semi.org in December 2020; originally published April 2012; previously published March 2015.

1 Purpose

1.1 The purpose of this Standard is to specify mechanical features for the 450 mm wafer tape frame cassette used between the wafer mounting process and the die-bonding process.

2 Scope

2.1 This Standard is intended to set an appropriate level of specification that places minimal limits on innovation while ensuring modularity and interchangeability at all mechanical interfaces.

2.2 Only the mechanical interfaces for the tape frame cassette are specified. Materials kinds or cleanliness are not defined.

2.3 This Standard specifies both semi-automated (PGV) and automated (AGV or OHT) handling of the tape frame cassette for 450 mm wafer. It does not intend to address manual handling.

2.4 A 450 mm wafer frame cassette has the following components and optional components. Optional components are not required features for the 450 tape frame cassette (TFC). They can be added according to customers' demands or manufacturing problems.

2.4.1 *Top*

- Top cover (optional)
- Automation flange (optional)

2.4.2 *Interior*

- Frame supports for 13 or 25 tape frames
- Tape frame restraint

2.4.3 *Sides*

- Corresponds to the forklift handling
- Presence sense area
- Guide surface (both sides)

2.4.4 *Rear*

- Rear cover (optional)
- Label placement area (optional)
- RFID tag volume (required only when RFID tag is used)

2.4.5 *Bottom*

- Three features that mate with kinematic coupling pins
- Seven frame cassette sensing pads
- Tape frame release bar (optional)
- Seating plane (4×)
- Presence sense area

Documents Document Sharing Hub
Full document details: SEMI G92-0315-1220R

- Seating guide surface (bottom/side corners)

2.4.6 *Front*

- Presence sense area

NOTICE: SEMI Standards and Safety Guidelines do not purport to address all safety issues associated with their use. It is the responsibility of the users of the Documents to establish appropriate safety and health practices, and determine the applicability of regulatory or other limitations prior to use.

3 Referenced Standards and Documents

3.1 *SEMI Standards and Safety Guidelines*

SEMI G88 — Specification for Tape Frame for 450 mm Wafer

SEMI G95 — Specification for Mechanical Features of 450 mm Load Port for Tape Frame Cassettes in Backend Process

NOTICE: Unless otherwise indicated, all documents cited shall be the latest published versions.

4 Terminology

4.1 *Abbreviations and Acronyms*

4.1.1 *AGV* — automated guided vehicle

4.1.2 *BP* — bilateral plane

4.1.3 *FP* — facial plane

4.1.4 *HP* — horizontal plane

4.1.5 *KC* — kinematic coupling

4.1.6 *KCP* — kinematic coupling pin

4.1.7 *LPA* — label placement area

4.1.8 *PGV* — person guided vehicle

4.1.9 *OHT* — overhead hoist transport

4.1.10 *RFID* — radio frequency identification

4.1.11 *TFC* — tape frame cassette

4.1.12 *TFRB* — tape frame release bar

4.2 *Definitions*

4.2.1 *450 TFC* — used generally as a 'term' only to identify the TFC used in fabs for 450 mm wafers.

4.2.2 *bilateral plane (BP)* — a vertical plane, defining x=0 of a system with three orthogonal planes (HP, BP, FP), coincident with the nominal location of the rear primary KCP, and midway between the nominal locations of the two front primary KCP.

4.2.3 *facial plane (FP)* — a vertical plane, defining y=0 of a system with three orthogonal planes (HP, BP, FP).

4.2.4 *front (of carrier)* — the side that is facing to the equipment and allows the tape frame input and extraction.

4.2.5 *horizontal plane (HP)* — a horizontal plane, defining z=0 of a system with three orthogonal planes (HP, BP, FP), coincident with the nominal location of the uppermost points (tips) of the three KCP.

4.2.6 *label placement area (LPA)* — this is the placement area for the label to identify the 450 TFC. Labels intended for use here include RFID, 2D-code, barcode, the label for visual confirmation, etc.

4.2.7 *plane* — a theoretical surface which has infinite width and length, zero thickness and zero curvature.

4.2.8 *rear (of carrier)* — the furthest side from the equipment.

Documents
Document Sharing Hub

Full document details: SEMI G92-0315-1220R

4.2.9 *tape frame* — the frame which uses the wafer tape and retains the wafer. It is used in dicing and die-bonding processes, as well as shipping and handling during these processes.

4.2.10 *tape frame cassette (TFC)* — a carrier that holds one or more tape frames.

4.2.11 *tape frame release bar (TFRB)* — a bar to release tape frames. It unlocks automatically when the 450 TFC is placed on the loading port of the equipment.

4.2.12 *wafer tape* — an adhesive plastic tape which retains the wafer or separated die.

5 Requirements

5.1 *Dimensions* — The 450 TFC dimensions are shown in Figures 1 through 16, and listed in Table 1.

5.2 *Tape Frame Seating Position* — The seating position is shown in Figure 6.

5.3 *Top Cover (optional)* — Top cover is an optional component. The dimension defined in ¶ 5.1.

5.4 *Automation Flange (optional)* — It may be installed on the top of 450 TFC. The dimension defined in ¶ 5.1.

5.4.1 The side surface of the automation flange shall have a detection area. The detection area shall be made of an opaque material to enable the OHT system (or other systems which use the automation flange) to detect the presence or absence of the carrier. The detection area is defined in Figure 2.

5.5 *Number of Slots* — The number of slots for 450 TFC (the full storage number) is 13 or 25.

5.6 *Tape Frame Release Bar* — There must be tape frame release bar on 450 TFC to avoid frames sliding out from the frame cassette during handling. This feature has to meet the dimension defined in ¶ 5.1.

5.7 *Forklift Feature* — 450 TFC shall have features on the sides for handling by forklift, shown in Figures 3 and 6. The forklift feature includes a notched indentation for a pin to retain the 450 TFC on the forklift. The vertical surface defined by $x6$ and horizontal surfaces defined by $z15$ and $z13$ must extend the full length of the 450 TFC from front to rear.

5.8 *Rear Cover (optional)* — Rear cover is an optional component. The dimension defined in ¶ 5.1.

5.9 *Kinematic Coupling Pin (KCP) and Kinematic Coupling (KC) Groove*

5.9.1 *KC Grooves* — The 450 TFC shall have grooves to capture both primary and secondary KCP. The KCP and KC grooves are specified by Figure 10. To allow for alignment of the 450 TFC into the right position when the 450 TFC is put on the loading port, the grooves must enable a positioning alignment error within 15 mm in the horizontal direction.

5.9.2 *KCP* — The configuration of KCP is shown in Figure 14.

5.10 *TFC Sensing Pads* — The TFC must have six sensing pads on the bottom of the 450 TFC. Placement sensing pads are intended to provide defined locations to confirm proper placement of the 450 TFC onto the KCP. The flat areas shall be at height of $z18$. See Figures 11 and 12.

5.11 *TFRB (optional)* — The tape frame release bar is an optional component designed to keep the tape frame from sliding out of the 450 TFC during transport or storage of the 450 TFC.

5.11.1 The TFRB is normally in the locked position, but unlocked when the 450 TFC is placed on a load port for tape frame cassettes with a TFRB seating area. The 450 TFC is intended to slide up and down, sliding up to be unlocked automatically when the bar is pushed up by setting 450 TFC on the load port. The weight of an empty or full carrier must be enough to slide the bar. It shall be designed such that a force in excess of 6 N is required to push up the bar.

5.11.2 The TFRB mechanism works in reverse when the 450 TFC is lifted up from the load port, sliding down and locking the tape frames in place inside the 450 TFC. The configuration shall be as shown in Figures 11 and 13.

5.11.3 The side surface of the TFRB shall have a detection area. The detection area shall be made of an opaque material. It will move along with the vertical motion of the bar and enable judgment as to whether the bar is in the locking or release position. The detection area is defined in Figure 17.

5.11.4 The bottom surface of TFRB shall have a sensing pad for detecting the presence or absence of the cassette. It will move along with the vertical motion of the bar and enable position judgment of the bar with load. The required

Documents
Document Sharing Hub
Full document details: SEMI G92-0315-1220R

actuating force of the bar is 6 N, and therefore the load for sensing shall be under 6 N. The definition is referred to in Figures 11 and 13.

5.12 *LPA (optional)* — LPA is an optional area to place and set the label or RFID tag. The part of rear cover is used. It shall be as shown in Figures 15 and 16.

5.13 *The Cutout of the Cassette Top Plate or Bottom Plate* — Make a cutout on the cassette for 450 mm to avoid the push-pull arm (mechanical clamp) bumping into the cassette when the tape frames are input and extracted from the cassette. These cutout dimensions of the cassette top plate are defined as $x22$ and $y16$ in Figure 7, and those of the cassette bottom plate are defined as $x24$ and $y27$ in Figure 10.

5.14 *Tape Frame Position* — When placed into the 450 TFC the front edge of the frame must be positioned $y24$ from the FP and the sides of the tape frame positioned less than $x20$ from the BP. After the 450 TFC has been placed on a loadport (and the optional TFRB released), the front and sides of the frame must also be positioned per $y24$ and $x20$ to allow for removal of the frame from the 450 TFC. See Figures 3 and 6.

5.15 *Center of Gravity Volume* — The position of the x and y direction of the center of gravity of 450 TFC shall be defined as $y18$ and $r18$, when the carrier is empty. It is defined in Figure 7.

5.15.1 The measurement method for the position of the center of the gravity is clarified in Appendix 1.

5.16 *Presence Sense Area* — The 450 TFC shall have a presence detection area on the front, sides and bottom surfaces. The detection area shall be made of an opaque material. The OHT system, load port, and any system which uses the KCP may use these areas to detect the presence of the 450 TFC even if it is not in the ideal position. The front area is defined in Figures 3 and 5. The side areas are defined in Figure 17 and shall be present on both sides of the TFC. The bottom area is defined in Figures 11 and 12.

5.17 *Guide Surface* — The 450 TFC shall have a vertical Guide Surface on both sides at the forklift feature. The Guide system supports the surface of the 450 TFC and prevents vibration while handling. It is defined in Figures 2 and 3.

5.18 *Seating Guide Surface* — Both bottom – side corners of the 450 TFC shall have a Seating Guide Surface. These vertical and horizontal surfaces are used as a guide plane for placing the 450 TFC on the stocker, and as a roll prevention feature at times it is stored in the stocker. It is defined in Figures 3, 10, 12, and 17.

5.19 *Seating Plane* — There shall be 4 Seating Planes on the bottom surface of the 450 TFC. They are used as placement and seating surfaces when it is stored in the stocker. They are defined in Figures 3, 10 and 12.

5.20 *Weight of the 450 TFC* — When a carrier is empty, it is preferable to limit the mass of the 450 TFC to within 25 kg for a 25 slot TFC case and to within 20 kg for a 13 slot TFC case.

5.21 *RFID Tag Placement Volume (optional)* — When an RFID tag is used, the entire tag shall be placed in the volume defined in Figures 15 and 16.

5.22 The entire bottom surface of the TFC shall be covered or enclosed with no openings or through-holes.

6 Related Documents

6.1 *SEMI Standards and Safety Guidelines*

SEMI E158 — Specification for Mechanical Features of Fab Wafer Carrier Used to Transport and Store 450 mm Wafers (450 FOUP) and Kinematic Coupling

Documents
Document Sharing Hub

Full document details: SEMI G92-0315-1220R

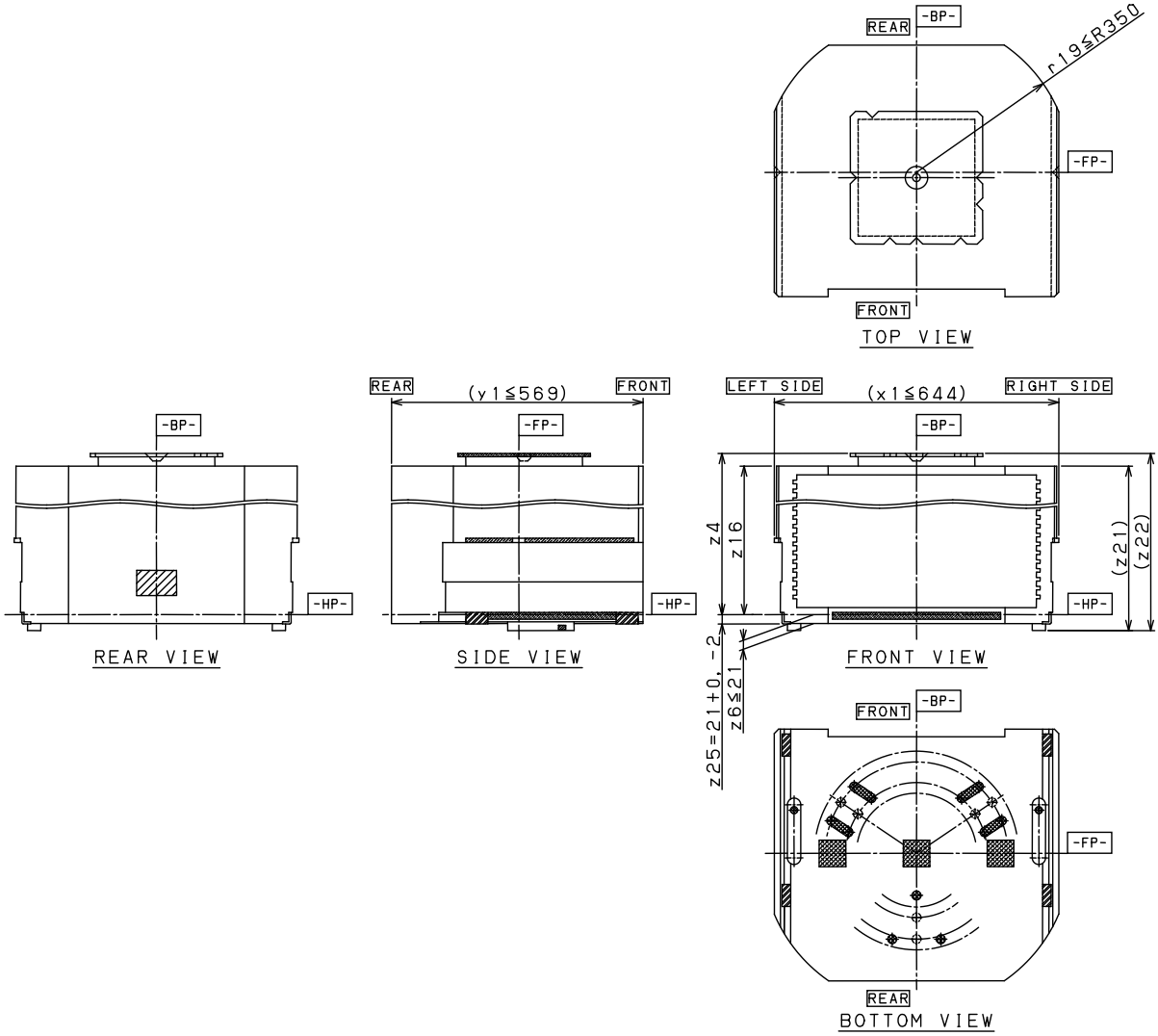

Figure 1
450 TFC Overall View

Documents
Document Sharing Hub
Full document details: SEMI G92-0315-1220R

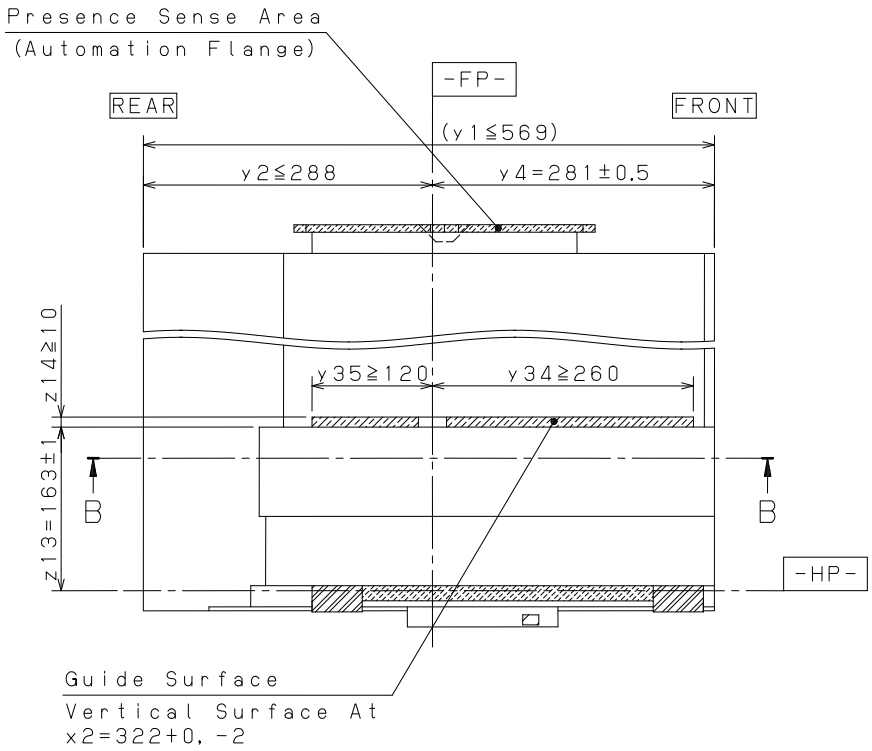

Figure 2
450 TFC Side View (both sides of the TFC)

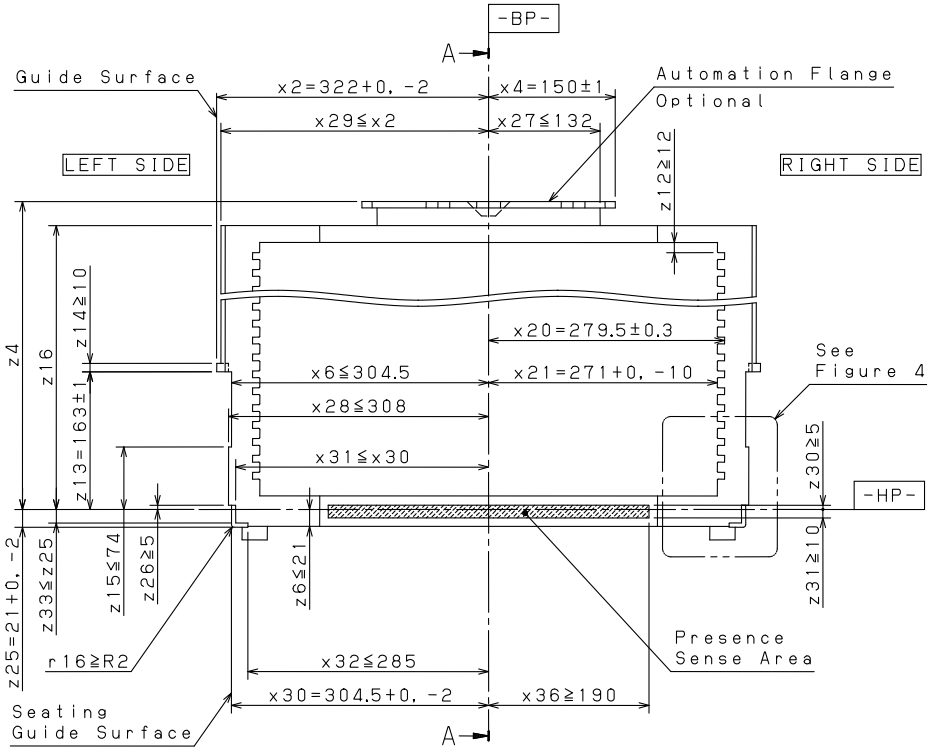

Figure 3
450 TFC Front View

Documents
Document Sharing Hub
Full document details: SEMI G92-0315-1220R

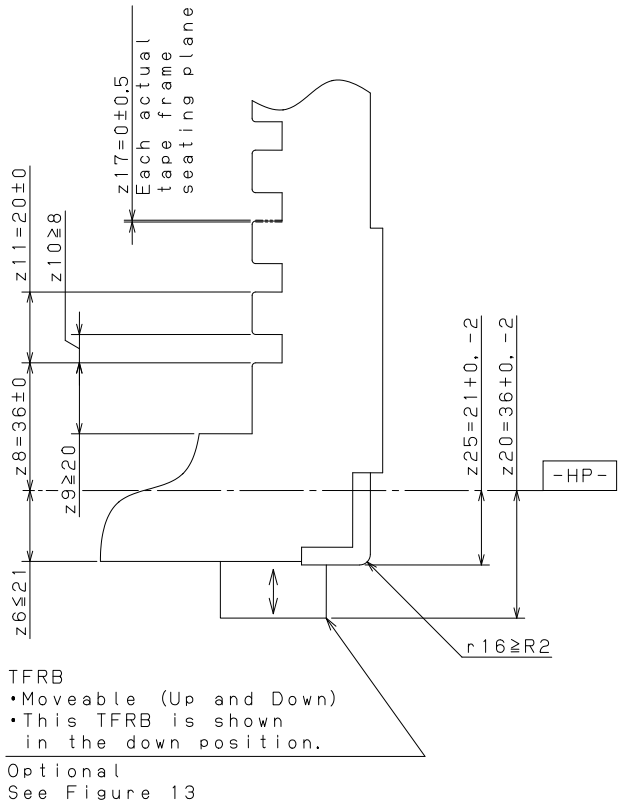

Figure 4
Tape Frame Slot Detail View

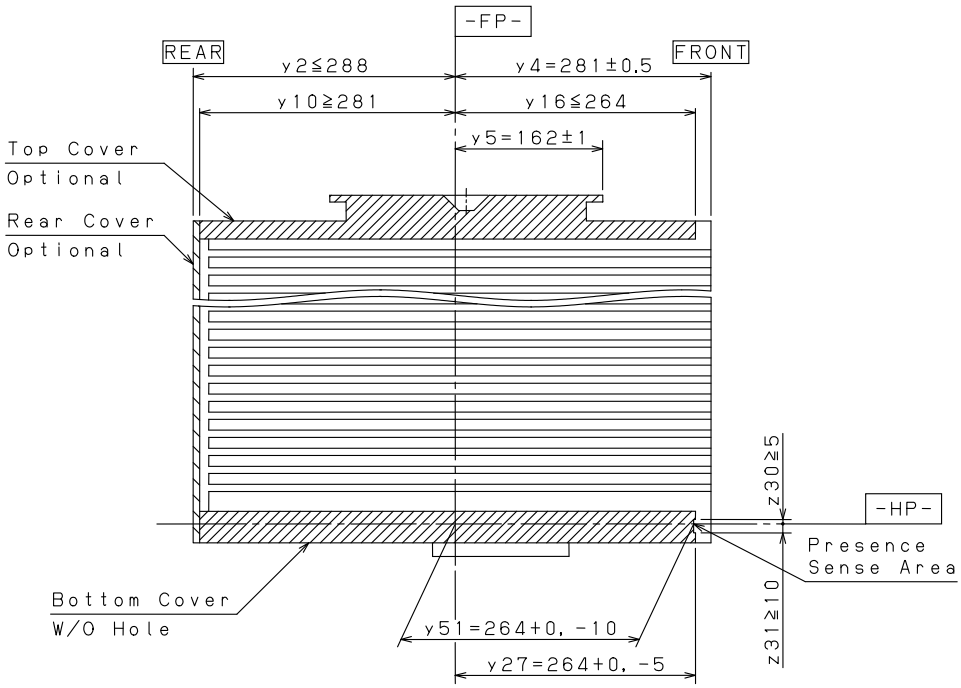

Figure 5
450 TFC Cross-Section View (Figure 3 View A-A)

Documents
Document Sharing Hub
Full document details: SEMI G92-0315-1220R