# SEMI M31-0307
# MECHANICAL SPECIFICATION FOR FRONT-OPENING SHIPPING BOX USED TO TRANSPORT AND SHIP 300 mm WAFERS

This standard was technically approved by the global Silicon Wafer Committee. This edition was approved for publication by the global Audits and Reviews Subcommittee on November 21, 2006. It was available at www.semi.org in February 2007 and on CD-ROM in March 2007. Originally published in 1998; previously published July 2006.

## 1 Purpose

1.1 This standard specifies the front-opening shipping box (FOSB) used to ship 300 mm wafers from wafer suppliers to their customers (typically IC manufacturers), while maintaining wafer quality.

NOTE 1: Refer to SEMI silicon wafer related specifications M-series such as SEMI M1 as for a wafer quality.

## 2 Scope

2.1 This standard is intended to set an appropriate level of specification that places minimal limits on innovation while ensuring modularity and interchangeability at all mechanical interfaces. However, this standard has been written so that injection-molded plastic FOSBs can be manufactured in conformance with it, and those can be utilized for maintaining wafers quality during transportation, opening and closing the door.

2.2 This standard assumes that the FOSB is used in the last process in wafer manufacturing, in acceptance and inspection, and in transferring the wafers from the FOSB to a FOUP, FOBIT or open cassette inside an IC manufacturing facility. The FOSB is not intended to be used in IC manufacturing processes. It is recommended that wafers be transferred from the FOSB to a FOUP, FOBIT or open cassette using automated methods. As described in ¶ 5.4, the purchaser needs to specify which type of FOSB door is required:

1. Manual door as described in ¶ 5.4.1; or
2. Automated–shippable door as described in ¶ 5.4.2.

**NOTICE:** This standard does not purport to address safety issues, if any, associated with its use. It is the responsibility of the users of this standard to establish appropriate safety and health practices and determine the applicability of regulatory or other limitations prior to use.

## 3 Referenced Standards and Documents

3.1 *SEMI Standards*

SEMI E1.9 — Mechanical Specification for Cassettes Used to Transport and Store 300 mm Wafers

SEMI E15 — Specification for Tool Load Port

SEMI E15.1 — Specification for 300 mm Tool Load Port

SEMI E47.1 — Mechanical Specification for Boxes and Pods Used to Transport and Store 300 mm Wafers

SEMI E57 — Mechanical Specification for Kinematic Couplings Used to Align and Support 300 mm Wafer Carriers

SEMI E62 — Provisional Specification for 300 mm Front-Opening Interface Mechanical Standard (FIMS)

SEMI E119 — Provisional Mechanical Specification for Reduced-Pitch Front-Opening Box for Interfactory Transport of 300mm Wafers

SEMI M45 — Provisional Standard for 300mm Wafer Shipping System

SEMI S8 — Safety Guidelines for Ergonomics Engineering of Semiconductor Manufacturing Equipment

**NOTICE:** Unless otherwise indicated, all documents cited shall be the latest published versions.

## 4 Terminology

4.1 *Definitions*

4.1.1 *bilateral datum plane* — a vertical plane that bisects the wafers and that is perpendicular to both the horizontal and facial datum planes (as defined in SEMI E57).

4.1.2 *box* — a protective portable container for a carrier and/or substrate(s).

SUPERSEDED



Documents Document Sharing Hub
Full document details: SEMI M31-0307

4.1.3 *carrier* — an open structure that holds one or more substrates.

4.1.4 *carrier bottom domain* — volume (below *z*6 above the horizontal datum plane) that contains the bottom of the carrier (as defined in SEMI E1.9).

4.1.5 *carrier capacity* — the number of substrates that a carrier holds (as defined in SEMI E1.9).

4.1.6 *carrier sensing pads* — surfaces on the bottom of the carrier for triggering optical or mechanical sensors (as defined in SEMI E1.9).

4.1.7 *carrier side domains* — volumes (from *z*6 above the horizontal datum plane to *z*15 above the top nominal wafer seating plane) that contain the mizo teeth or slots that support the wafer and the supporting columns on the sides and rear of the carrier (as defined in SEMI E1.9).

4.1.8 *carrier top domain* — volume (higher than *z*15 above the top wafer) that contains the top of the carrier (as defined in SEMI E1.9).

4.1.9 *facial datum plane* — a vertical plane that bisects the wafers and that is parallel to the front side of the carrier (where wafers are removed or inserted). On tool load ports, it is also parallel to the load face plane specified in SEMI E15 on the side of the tool where the carrier is loaded and unloaded (as defined in SEMI E57).

4.1.10 *front-opening shipping box (FOSB)* — a shipping box with a front-opening interface.

4.1.11 *front-opening unified pod (FOUP)* — a box (that complies with SEMI E47.1) with a non-removable cassette (so that its interior complies with SEMI E1.9) and with a front-opening interface (that mates with a FIMS port that complies with SEMI E62) (as defined in SEMI E47.1).

4.1.12 *front-opening box for interfactory transport (FOBIT)* — box for interfactory transport between IC manufacturing sites.

4.1.13 *horizontal datum plane* — a horizontal plane from which projects the kinematic-coupling pins on which the carrier sits. On tool load ports, it is at the load height specified in SEMI E15 and might not be physically realized as a surface (as defined in SEMI E57).

4.1.14 *minienvironment* — a localized environment created by an enclosure to isolate the product from contamination and people.

4.1.15 *nominal wafer centerline* — the line that is defined by the intersection of the two vertical datum planes (facial and bilateral) and that passes through the nominal centers of the seated wafers (which must be horizontal when the carrier is placed on the coupling) (as defined in SEMI E57).

4.1.16 *optical wafer sensing paths* — lines of sight for optically sensing the positions of the wafers. Several horizontal optical wafer sensing paths are present in between the carrier side domains. In addition, two vertical optical wafer sensing paths are created by rectangular exclusion zones in the front of the carrier top and bottom (as defined in SEMI E1.9).

4.1.17 *shipping box* — a protective portable container for a carrier and/or wafer(s) that is used to ship wafers from the wafer suppliers to their customers.

4.1.18 *shipping-box front-opening mechanical interface (SFMI)* — optional automated-shippable door style for a FOSB that is compatible with SEMI E62, and must be considered characteristics with exceptions as noted in ¶ 5.4.2.

4.1.19 *virtual tracking unit* — an entity (which could be a number of substrates or an individual die or mask group) that the factory floor control system treats as a single unit for tracking purposes (as defined in SEMI E1.9).

4.1.20 *wafer carrier* — any cassette, box, pod, or boat that contains wafers (as defined in SEMI E15).

4.1.21 *wafer extraction volume* — the open space for extracting a wafer from the carrier (as defined in SEMI E1.9).

4.1.22 *wafer pick-up volume* — the space that contains entire bottom of a wafer if the wafer has been pushed to the rear of the carrier (as defined in SEMI E1.9).

4.1.23 *wafer set-down volume* — the open space for inserting and setting down a wafer in the carrier (as defined in SEMI E1.9).

## 5 Requirements

5.1 The FOSB has the following components and sub-components:

Key:

- Required feature
  - ◊ Optional feature

SUPERSEDED



Documents
Document Sharing Hub
Full document details: SEMI M31-0307

- Rear
  - ◊ RFID Tag Placement Volume
- Door on front
  - ◊ Manual door (optional)
  - ◊ Automated door (optional)
- Holes for latch keys that lock the door to the SFMI interface when the door is unlatched from the box
- Holes for registration pins
- Door presence sensing areas
- Top
  - ◊ Top robotic handling flange (optional)
- Interior
- Cassette with supports for 13 or 25 wafers
- Wafer retainer
- end effector exclusion zone
- Sides
  - ◊ Ergonomic manual handles (optional)
- Bottom
- 5 carrier sensing pads
- 4 Info pads
- 3 features that mate with kinematic coupling pins and provide a 10 mm lead-in
  - ◊ 3 features that mate with kinematic coupling pins and provide a 15 mm lead-in (optional)
  - ◊ Retaining features for manual door (optional)
- Retaining features for automated-shippable door

5.2 *Kinematic Couplings* — The physical alignment mechanism from the FOSB to the tool load-port (or a nest on a vehicle or in a stocker) consists of features (not specified in this standard) on the top entity that mate with three or six pins underneath as defined in SEMI E57. The three features that mate with the kinematic coupling pins must provide a lead-in capability that corrects a FOSB misalignment of up to *r*69 in any horizontal direction.

5.3 *Inner and Outer Radii* — All required concave features may have a radius of up to *r*65 to allow cleaning and to prevent contaminant build-up. All required convex features may also have a radius of up to *r*66 to prevent small contact patches with large stresses that might cause wear and particles. Note that these limits on the radius of all required features are specified as a maximum (not a minimum) to ensure that the required features are not rounded off too much. The lower bound on the radius is up to the FOSB supplier. Note also that this radius applies to every required feature unless another radius is called out specifically. Here a required feature is an area on the surface of the FOSB supplier. Note also that this radius applies to every required feature unless another radius is called out specifically. Here a required feature is an area on the surface of the FOSB specified by a dimension (or intersections of dimensions) that has a tolerance and not just a maximum or minimum (such as the edges of the robotic handling flange).

5.4 *Door* — It is recommended that the FOSB not be vertical when it is opened or closed. When the FOSB is in a vertical orientation with the door removed, the wafers must be restrained from touching each other by appropriate wafer support design or other retaining techniques.

5.4.1 *Manual Door* — If chosen, the manual door option requires no automation to open the door. An exclusion zone surrounding the manual door area is specified in the standard. There are several possible techniques for sealing and clamping the manual door that meet user requirements. Therefore, only an exclusion zone surrounding the manual door area is specified in this standard. All features of the door and door retaining mechanism must lie within the exclusion zone illustrated in Figure 1 and must not interfere with other specified features (including the kinematic couplings). Figure 1 and dimensions *x*81, *y*50, *y*81, *y*82, *z*47, *z*48 and *z*49 define the manual door area and therefore apply only to the manual door option as described in this section. The *y*81 dimension applies from the

SUPERSEDED



Documents Document Sharing Hub
Full document details: SEMI M31-0307

horizontal datum plane to the top surfaces of the FOSB (*z*47-*z*48 or *z*47+*z*49 at the upper door frame volume specified by *y*50).

5.4.2 *Automated-shippable Door* — If chosen, the automated-shippable door must be designed to mate with a port that conforms to SEMI E62. However, following characteristics of automate-shippable door must be considered.

5.4.2.1 *Wafer Retaining Structure* — The slot is usually designed that wafers are suspended in the slot without contacting the surface of the slot for preventing the damage during transportation when FOSB door is closed. It should be noted that wafer position of FOSB is different from that of FOUP when the door is closed due to the wafer retaining structure.

5.4.2.2 *Rear of Door* (*y*51) — For manual door, FOSB has a *y*51 ≥ 50 mm to hold wafers in large area at front wafer retainer for keeping wafer quality during transportation. For automated-shippable door, FOSB has a *y*51≥ 140 mm to comply with SEMI E47.1.

5.4.2.3 *Force with Which the Load Port Presses the Box Door Into the Box* (*f*34: defined by SEMI E62) — *f*34 is related to wafer retaining force though, need to consider door is pulled by latching too. The gap y88 shall be zero (or even can have a slightly negative value compared to the "datum measured from" in Table 3), when the load port applies a force *f*34 of 110N or more. Even though, *f*34 is increased, minimum force applied to wafer would be recommended for eliminating damage to the wafers in dynamic motion for opening and closing the door.

5.4.2.4 *Latch Key Torque* (*f*30: defined by SEMI E62) — The required latch key torque depends on the closing force.

5.4.2.5 A FOSB with an automated-shippable door should be able to withstand a force when applied to one of the retaining features of up to 40N (*f*61) in any direction without negative impact to the intended function of the FOSB (e.g., shell deformation, wafer positions, door closing capabilities).

5.4.2.6 *Gap(y88)* — The distance between 1) the FOSB Door Front in the fully seated position when the door is closed on a FOSB containing up to 25 wafers, and 2) the FOSB Door Front at the stage when the latch keys are allowed to be turned. The Gap value is specified by *y*88 where *y*88 is added to the measured *y*52 dimension of the FOSB. T his would result in the dimension of the front of the automated-shippable door from the facial datum plane being equal to the measured *y*52 value plus *y*88 (reference Figure 15).

Note:

a) The FOSB door may not be pushed to the fully seated position by f34. There might be a gap left of up to y88, especially when a force close to the lower limit of f34 will be applied. Fully seated within this context should be understood as the static position of the FOSB door within the box shell, when the box is completely closed and the box front features are within the limits as defined by y52 of SEMI M31.

b) Final closing, which includes a movement of the FOSB door to it's fully seated position, is accomplished by turning latch keys as described in ¶ 5.4 of SEMI E62.

c) Measured *y*52 is the physical measurement of the *y*52 dimension of the FOSB, within the tolerance as specified for *y*52 in SEMI M31.

d) The gap *y*88 may have a size of up to the maximum value defined in Table 3, when a load port applies the minimum force *f*34 as defined in SEMI E62 for a FOSB.

e) The current size of the gap *y*88, within the given limits, may depend both from the actual amount of force *f*34 applied by a load port as well as from the specific design of the FOSB.

5.5 *Seal Zones for Door* — In the Front Opening Shipping Box Automated Door Option the automated box door is on the front side of the box (corresponding to the front side of the carrier where wafers are accessed so the door is perpendicular to the wafers and parallel to the facial datum plane). The automated door and the carrier frame must have surfaces that mate with the seal zones defined in SEMI E62. Specifically, the FOSB automated box door option and the carrier frame must have surfaces that made with the seal zones and the reserved spaces for vacuum application (which includes all of the circles bounded by *r*38 except for the holes for the registrations at the center of each circle) defined in § 5 of SEMI E62 (which specifies *r*38 as well as the seal zone dimensions). These automated door and frame surfaces must be a distance of *y*52 from the facial datum plane and must have a flatness of *y*42. No surface on the automated door may project further from the facial datum plane than the door seal zone and the reserved spaces for vacuum application. The automated door must also be designed so that when the box is pressed against the FIMS port, both latch keys on the port are inserted to their full length. Furthermore, when the latch keys are turned more than 45° toward the position that unlocks the automated door from the box, the latch key holes on the door must be such that the door is not removable from the latch keys. There are no door seal zone requirements

SUPERSEDED



Documents
Document Sharing Hub
Full document details: SEMI M31-0307

for the manual door option, but a FOSB with the manual door must contain a frame seal zone that meets the frame seal zone requirements specified in this section.

5.6 *Wafer Retaining* — When the FOSB is closed, the wafers must be retained in the FOSB to prevent movement during subsequent handling, including shipping. It should be noted that wafers are typically shipped in a vertical orientation and generally require support from a secondary package. It is recommended that this secondary package be designed to allow for easy removal of the FOSB from the secondary package.

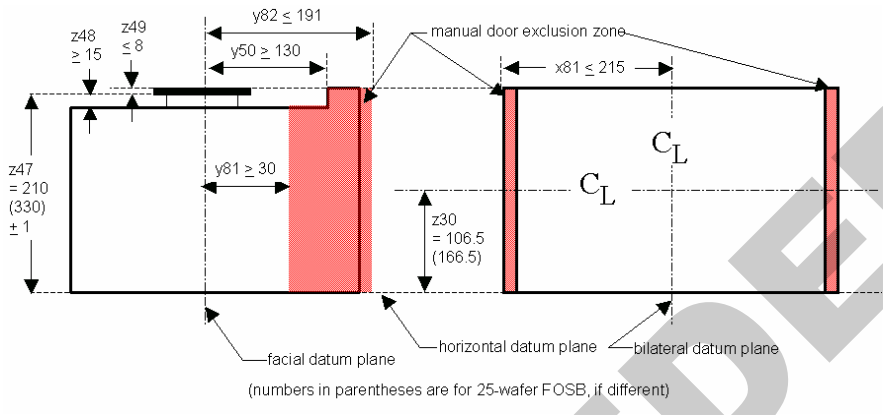


**Figure 1**
**Manual Door Area**

5.7 *Wafer Orientation and Numbering* — The wafers must be horizontal when the FOSB is placed on the coupling, and the wafers slots are numbered in increasing order from bottom to top (so the bottom wafer is wafer number 1, the next wafer up is wafer number 2, etc.).

5.8 *Internal Horizontal Dimensions* — Figure 2 shows a cross-section of the horizontal boundaries of the FOSB side domains (which contain the parts of the FOSB higher than *z*6 above the horizontal datum plane and lower than *z*15 above the top wafer). In this and following figures, the most heavy lines are used for surfaces that have tolerances (not surfaces that have only maximum or minimum dimensions).

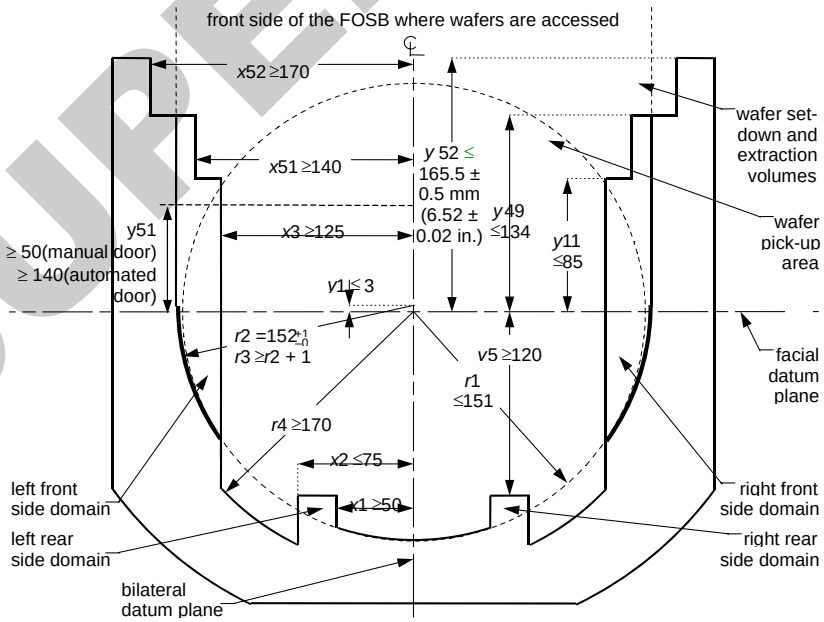


**Figure 2**
**Top View of FOSB Internal Dimensions**

SUPERSEDED



Documents Document Sharing Hub
Full document details: SEMI M31-0307

5.9 *Internal Vertical Dimensions* — Figures 3–7 show the vertical dimensions of the internal FOSB. Note that *z*8 (the height of the bottom nominal wafer seating plane above the horizontal datum plane) and *z*12 (the distance between adjacent nominal wafer seating planes) are given as absolute distances with no tolerance. This means that the sum of actual height variations in the FOSB from the kinematic coupling to the supporting features holding each wafer must be contained within the tolerance of *z*10 with no further stack-up at each higher wafer. The method for meeting this requirement is left up to the FOSB supplier. Table 2 defines all dimensions for Figures 3–7.

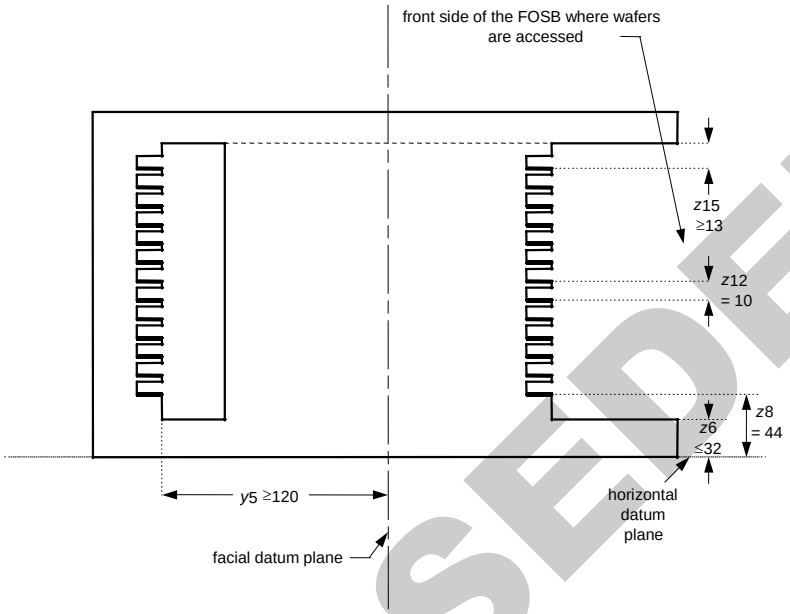


**Figure 3**
**Side View of FOSB Internal Dimensions**

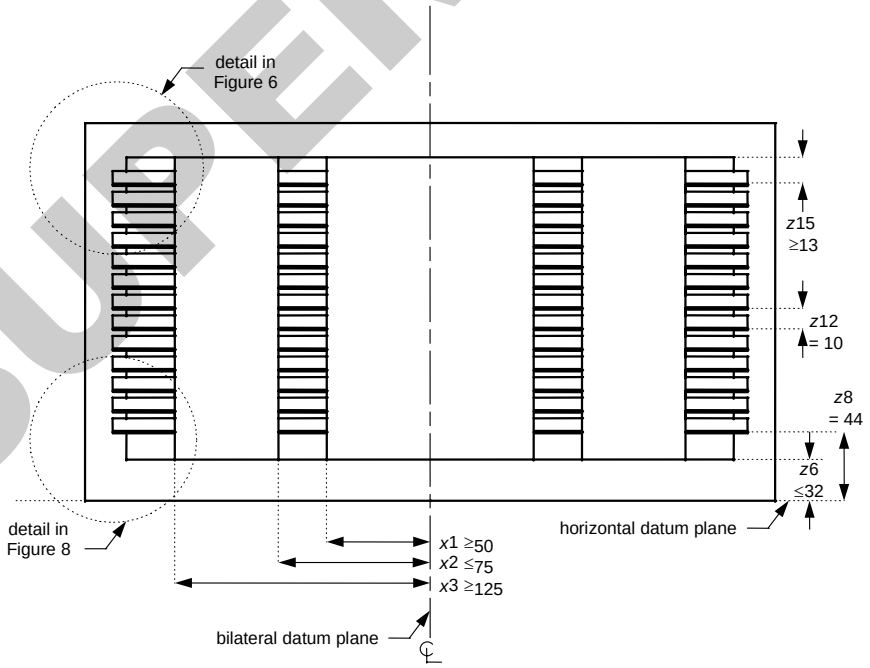


**Figure 4**
**Front View of FOSB Internal Dimensions**

SUPERSEDED



Documents
Document Sharing Hub
Full document details: SEMI M31-0307

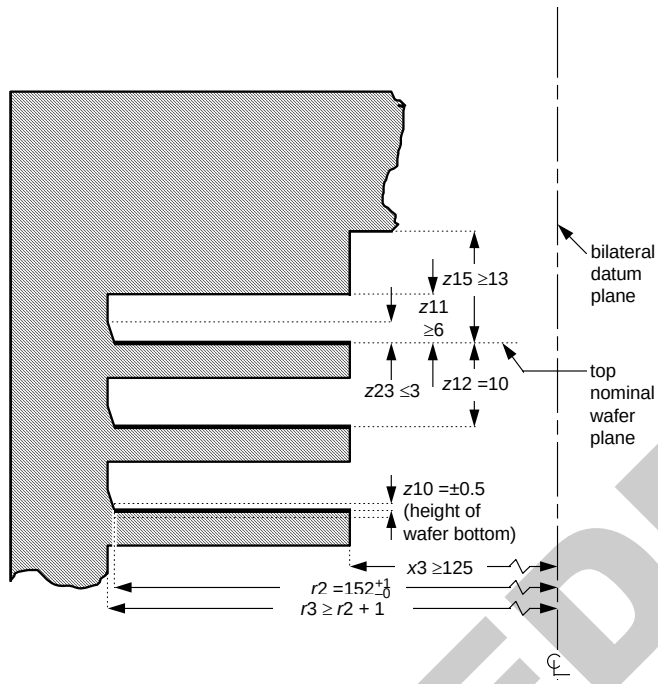


**Figure 5**
**Upper Cross-Section at Facial Datum Plane**

5.9.1 *Wafer Set-Down Volume* — The open space for the wafer set-down volume consists of a cylindrical section with radius *r*2 and a main axis parallel to and *y*1 in front of the nominal wafer centerline. The top of this cylindrical section is *z*11 above the nominal wafer seating plane and its bottom is *z*10 above the nominal wafer seating plane. The implications for wafer positioning of the tolerance on *r*2 are as follows. The wafers should be placed in the FOSB within a circle of radius corresponding to the smaller bound on *r*2 to avoid touching the edge of the wafer to the side of the FOSB. Once the wafer has been placed, the FOSB must not allow a wafer to move outside of a circle of radius corresponding to the larger bound on *r*2. There are two exceptions to this limit on wafer movement. When the wafer is pushed toward the rear of the FOSB, the location of the wafer is defined by the wafer pick-up volume (see ¶ 5.9.3). When the FOSB is gently tilted forward up to 45°, the wafers may slide forward, but it is recommended that they not extend further than *y*20 from the facial datum plane. This may be accomplished by designing the teeth supporting the wafers to include a "wafer stopper" at the front that is outside of *r*2 and under *z*29 as illustrated in Figure 6.

5.9.2 *Wafer Extraction Volume* — The open space for the wafer extraction volume includes a cylindrical section with radius *r*3 and a main axis parallel to and *y*1 in front of the nominal wafer center line. The top of this cylindrical section is *z*11 above the nominal wafer seating plane and its bottom is *z*23 above the nominal wafer seating plane. The wafer extraction volume also includes the extrusion out the front of the FOSB of this cylindrical section and the portion of the wafer set-down volume above *z*29. The implications for wafer extraction of the definition of dimension *r*3 ($r3 \geq r2 + 1$) are as follows. The FOSB must give an extra 1 mm (0.04 in.) of horizontal clearance once the wafer is picked up from wherever it ends up (within the bounds of *r*2) after transport in the FOSB.

SUPERSEDED



Documents Document Sharing Hub
Full document details: SEMI M31-0307

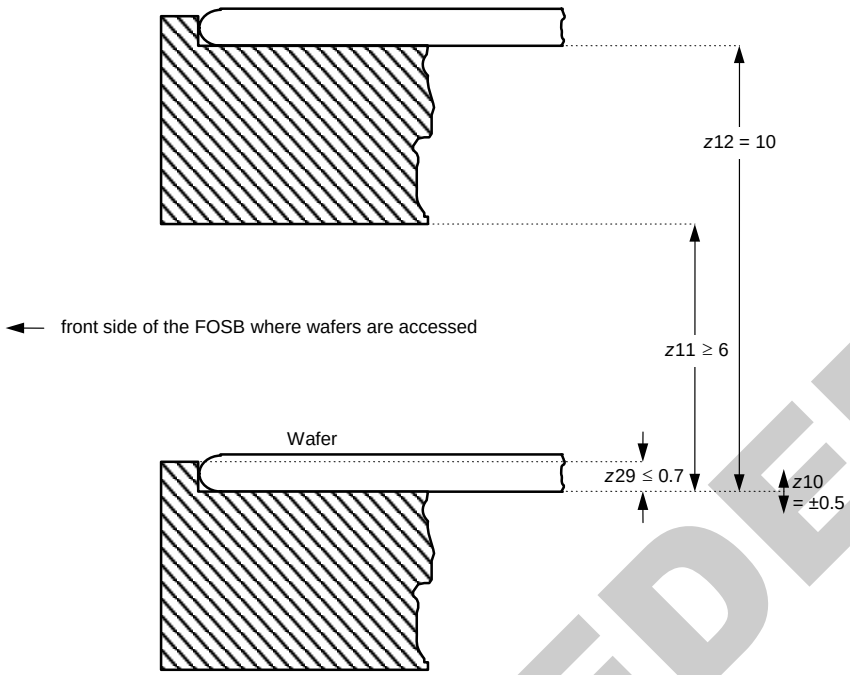


**Figure 6**
**Features That Prevent Wafer Creep-Out**

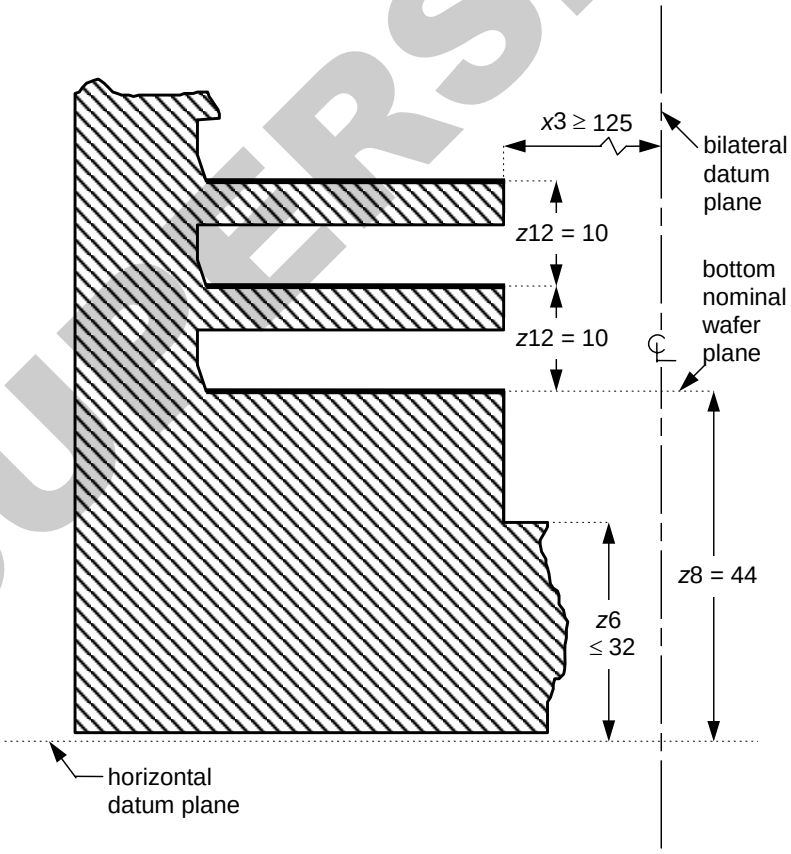


**Figure 7**
**Lower Cross-Section at Facial Datum Plane**

SUPERSEDED



Documents
Document Sharing Hub
Full document details: SEMI M31-0307