SEMI MF110-1107 (Reapproved 0912)
TEST METHOD FOR THICKNESS OF EPITAXIAL OR DIFFUSED LAYERS IN SILICON BY THE ANGLE LAPPING AND STAINING TECHNIQUE

This Standard was technically approved by the Silicon Wafer Global Technical Committee. This edition was approved for publication by the global Audits and Reviews Subcommittee on August 30, 2012. Available at www.semiviews.org and www.semi.org in September 2012; originally published by ASTM International as ASTM F110; previously published November 2007.

NOTICE: This Document was reapproved with minor editorial changes.

SUPERSEDED

1 Purpose

1.1 Epitaxial growth and dopant diffusion processes are used extensively in the manufacture of silicon electron devices. Measurement of the resulting layer thickness is a key factor in the control of these processes. Epitaxial and diffusion layer thickness measurements are also used to determine the suitability of silicon wafers for subsequent steps in electron device manufacture.

1.2 This Test Method is suitable for process control, research and development, and materials acceptance purposes.

2 Scope

2.1 This Test Method covers a procedure suitable for interlaboratory comparisons of layer thickness. This Test Method is applicable for layers of any resistivity so long as the layer differs from the silicon substrate under it either in conductivity type or by at least one order of magnitude in resistivity. The method described is destructive in nature but is more widely applicable than the alternative infrared method, SEMI MF95.

2.2 For layers with thicknesses between 1 and 25 µm, an interlaboratory precision as defined in ASTM E177, of $\pm(0.15\ T + 0.5\ \mu m)$ (3S) can be achieved where T represents thickness expressed in micrometers.

NOTICE: SEMI Standards and Safety Guidelines do not purport to address all safety issues associated with their use. It is the responsibility of the users of the Documents to establish appropriate safety and health practices, and determine the applicability of regulatory or other limitations prior to use.

3 Limitations

3.1 The thickness as determined by various methods depends on the impurity profile in the layer. Therefore, the layer thickness determined by this Test Method may not be equal to the layer thickness determined in accordance with SEMI MF95 or to the depth of the electrical junction below the surface.

4 Referenced Standards and Documents

4.1 *SEMI Standards and Safety Guidelines*

SEMI C28 — Specifications for Hydrofluoric Acid

SEMI C30 — Specifications for Hydrogen Peroxide

SEMI C35 — Specifications and Guidelines for Nitric Acid

SEMI M59 — Terminology for Silicon Technology

SEMI MF42 — Test Methods for Conductivity Type of Extrinsic Semiconducting Materials

SEMI MF95 — Test Method for Thickness of Lightly Doped Silicon Epitaxial Layers on Heavily Doped Silicon Substrates Using a Dispersive Infrared Spectrophotometer

Documents Document Sharing Hub

Full document details: SEMI MF110-1107-0912R

4.2 *ASTM Standards*[1]

ASTM D5127 — Standard Guide for Ultra Pure Water Used in the Electronics and Semiconductor Industry

ASTM E177 — Standard Practice for Use of the Terms Precision and Bias in ASTM Test Methods

NOTICE: Unless otherwise indicated, all documents cited shall be the latest published versions.

5 Terminology

5.1 Terms relating to silicon and other semiconductor technology are defined in SEMI M59.

6 Summary of Test Method

6.1 The specimen is lapped to obtain a section inclined at a small angle to the original surface.

6.2 The boundary of the layer is revealed by a chemical stain and illuminated with monochromatic light through a partially silvered optical flat to produce interference fringes.

6.3 A photomicrograph of the fringe pattern and specimen is taken and the thickness is determined from the number of fringes.

7 Apparatus

7.1 *Angle Lapping* — A plug and plug holder which hold the specimen at an angle of 1° to 5° (see Figure 1), flat frosted-glass lapping plate, a hot plate, a diamond scriber, and tweezers are required.

7.2 *Etching* — Containers of polyethylene or polypropylene suitable for use with hydrofluoric acid. A low-power microscope is required for checking the progress of the etch in staining the specimen.

NOTE 1: Special consideration is necessary in choosing a microscope used in the staining procedure. The etches used contain hydrofluoric acid, the vapors of which will fog glass lenses. An objective lens with a long working distance is recommended to retard this effect.

7.3 *Optical Measurements*

7.3.1 Research microscope adapted for use in this procedure or a special purpose two-beam interferometer is required. Several partially silvered optical flats or microscope slides of different transmission values, and a source of monochromatic light such as a mercury or sodium-vapor lamp are required if a microscope is to be adapted (see Figure 2).

7.3.2 Camera for photomicrography of the fringe pattern.

[1] ASTM International, 100 Barr Harbor Drive, West Conshohocken, PA 19428-2959, USA; Telephone: +1.610.832.9585, Fax: +1.610.832.9555, http://www.astm.org

SUPERSEDED

Documents
Document Sharing Hub

Full document details: SEMI MF110-1107-0912R

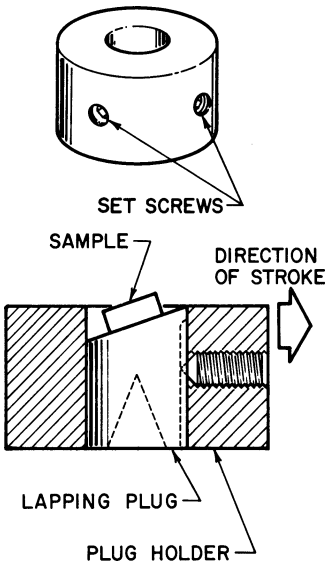

Figure 1
Lapping Plug and Holder

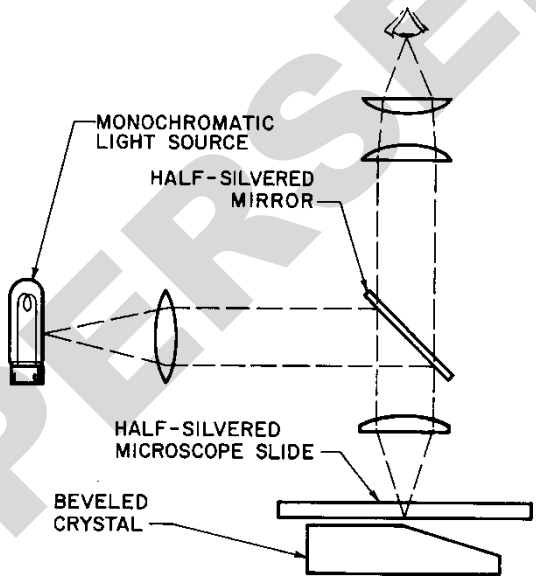

Figure 2
Interference Microscope

8 Reagents and Materials

8.1 *Purity of Reagents* — All chemicals for which SEMI Specifications exist shall conform to Grade 1, SEMI Specifications for those specific chemicals. Reagents for which SEMI Specifications have not been developed shall conform to the specifications of the Committee on Analytical Reagents of the American Chemical Society[2] where such specifications are available. Other grades may be used provided it is first ascertained that the reagent is of sufficiently high purity to permit its use without lessening the accuracy of the determination.

[2] *Reagent Chemicals, American Chemical Society Specifications,* American Chemical Society, Washington, DC.

SUPERSEDED
Documents
Document Sharing Hub
Full document details: SEMI MF110-1107-0912R