SEMI MF374-0312 (Reapproved 0718)
TEST METHOD FOR SHEET RESISTANCE OF SILICON EPITAXIAL, DIFFUSED, POLYSILICON, AND ION-IMPLANTED LAYERS USING AN IN-LINE FOUR-POINT PROBE WITH THE SINGLE-CONFIGURATION PROCEDURE

This Standard was technically approved by the Silicon Wafer Global Technical Committee. This edition was approved for publication by the global Audits and Reviews Subcommittee on February 1, 2018. Available at www.semiviews.org and www.semi.org in July 2018; originally published by ASTM International as ASTM F374-74T; previously published March 2012.

NOTICE: This Document was reapproved with minor editorial changes.

SUPERSEDED

1 Purpose

1.1 The sheet resistance of silicon epitaxial, diffused, and implanted layers is an important materials acceptance and process control parameter. The sheet resistance measurement may be used by itself or may be combined with a value of layer thickness, obtained separately, to obtain an estimate of the resistivity of an epitaxial or polysilicon layer or of the surface concentration of dopant for diffused layers.

1.2 This Test Method is suitable for use in materials acceptance, manufacturing control, research, and development.

2 Scope

2.1 This Test Method covers the direct measurement of the average sheet resistance of thin layers of silicon formed by epitaxy, diffusion, or implantation onto or below the surface of a circular silicon wafer having the opposite conductivity type from the thin layer to be measured or by the deposition of polysilicon over an insulating layer. Measurements are made at the center of the wafer using a single-configuration of the four-point probe. In this configuration, the current is passed through the outer pins and the resulting potential difference is measured with the inner pins.

2.2 This Test Method applies to circular samples with diameter greater than 15.9 mm (0.625 in.).

NOTE 1: The minimum value of the diameter is related to tolerances on the accuracy of the measurement through the geometric correction factor.

2.3 This Test Method is known to be applicable on films having thickness at least 0.2 µm. It can be used to measure sheet resistance in the range 10 to 5,000 Ω, inclusive.

NOTE 2: The minimum layer thickness is related to danger of penetration of the probe tips through the layer during measurement.

2.3.1 The principle of this Test Method can be extended to cover lower or higher values of sheet resistance; however, the precision of the method has not been evaluated for sheet resistance ranges other than those given in ¶ 2.3.

NOTE 3: The principles of this Test Method are also applicable to other semiconductor materials, but neither the appropriate conditions nor the expected precision have been determined. Other geometries can also be measured, but only comparative measurements using similar geometrical conditions should be used unless proper geometrical correction factors are known.

2.4 Procedures for preparing the specimen, for measuring its size, and for determining the temperature of the specimen during the measurement are also given. Abbreviated tables of correction factors appropriate to circular geometry are included with the method so that appropriate calculations can be made conveniently.

NOTE 4: Some relaxations of test conditions are mentioned in order to assist in applying the principles of the method to non-reference applications, for which a complete non-reference method has not yet been developed. The relaxed test conditions given are consensus conditions only and their effect on measurement precision and accuracy has not been explored.

NOTE 5: An alternative method, SEMI MF1529, generally provides superior measurement precision that may be very important for spatial uniformity mapping requirements. That Test Method also avoids the need to apply a lateral geometry correction to the measurements. However, that Test Method generally requires the use of a fully automated four-point probe measurement system.

2.5 This Test Method includes procedures for checking both the probe head and the electrical measuring apparatus.

Documents Document Sharing Hub

Full document details: SEMI MF374-0312-0718R

2.5.1 The spacing between the four probe tips is determined from measurements of indentations made by the probe tips in a polished silicon surface. This test also is used to determine the condition of the probe tips.

2.5.2 The accuracy of the electrical measuring equipment is tested by means of an analog circuit containing a known standard resistor together with other resistors that simulate the resistance at the contacts between the probe tips and the semiconductor surface.

2.6 The values stated in SI units are to be regarded as the standard. Any values given in parentheses are for information only.

NOTICE: SEMI Standards and Safety Guidelines do not purport to address all safety issues associated with their use. It is the responsibility of the users of the Documents to establish appropriate safety and health practices, and determine the applicability of regulatory or other limitations prior to use.

3 Limitations

3.1 In making resistivity measurements, spurious results can arise from a number of sources.

3.1.1 Photoconductive and photovoltaic effects can seriously influence the observed resistivity, particularly with nearly intrinsic material. Therefore, all determinations should be made in a dark chamber unless experience shows that the material is insensitive to ambient illumination.

3.1.2 Systematic error may also be introduced in the measurement of the separation of the probe tips. The relative error in the determination of the probe-tip spacing decreases as the nominal probe-tip spacing increases; a four-point probe with nominal 1.59 mm (0.0625 in.) probe-tip spacing is required for reference measurements.

3.1.3 Minority carrier injection during the measurement can occur due to the electric field in the specimen. With material possessing long lifetime of the minority carriers and high resistivity, such injection can result in a lowering of the resistivity for a distance of several centimeters from the point of injection. Carrier injection can be detected by repeating the measurements at lower current. In the absence of injection, no increase in resistivity should be observed at the lower current. The current level recommended (see ¶ 7.6.1.1) should reduce the probability of difficulty from this source to a minimum, but in cases of doubt the measurements of ¶¶ 12.4 to 12.8 should be repeated at a lower current. If the proper current is being used, doubling or halving its magnitude should cause a total change in observed resistance that is less than 0.5%.

3.1.4 Semiconductors have a significant temperature coefficient of resistivity. Consequently, the current used should be small to avoid resistive heating. The current level recommended (see ¶ 7.6.1.1) should reduce the chances of this difficulty. If resistive heating is suspected, it can be detected by a change in readings as a function of time starting immediately after the current is applied. If such a change is observed, repeat the measurements of ¶¶ 12.4 to 12.8 at a lower current.

3.1.5 Vibration of the probe head may cause variations in contact resistance, which is often manifested in unstable readings. If difficulty is encountered, shock-mount the apparatus.

3.1.6 Penetration of either current or voltage probe tip through the layer to be measured to the substrate can result in erroneous readings. This can usually be checked by mounting the specimen in direct contact with a metallic support grounded to the current supply and looking for a reduction in measured specimen voltage in at least one polarity. If this condition occurs:

- Examine the probe tips microscopically for sharp asperities and remove these by polishing,
- Reduce probe force, or
- Obtain probe pins with blunter tips.

3.1.7 The accuracy with which the separation of the probe tips is measured affects the accuracy of the calculated sheet resistance. The relative accuracy of probe tip spacing measurement decreases as the nominal value of the probe tip spacing decreases. For reference measurement purposes, use of a four-point probe with 1.59 mm (0.0625 in.) nominal spacing is required. Four-point probes having other nominal probe tip spacings are suitable for non-reference measurements.

SUPERSEDED

Documents
Document Sharing Hub

Full document details: SEMI MF374-0312-0718R

3.1.8 The accuracy of the final calculated value of sheet resistance is degraded if the four-point probe is not placed at the center of the specimen during measurement (see ¶ 12.4). For reference measurements, the center of the tip array probe shall not be more than 1 mm from the center of the specimen as measured along a non-flatted diameter.

3.2 The sheet resistance value calculated from the measurements may be in error if the thin film intended for the front surface is also formed on the back surface of the wafer, and if the wafer edges provide a conducting path between the front surface and back surface films. The effect of complete coverage of the wafer front surface, edge, and back surface by a thin conducting film is to make the appropriate value of the correction factor F_2 equal to the limiting value of 4.532, regardless of wafer diameter or probe spacing. It is generally difficult or impossible to test for the conductivity type of the wafer edges. However, if a conductivity-type test of the back surface of the wafer shows this surface to be of the same conductivity type as the front surface, the resulting sheet resistance measurements may be in error. The absolute value of the maximum error is given by $|1 - (4.532/F_2)|$.

3.3 The recommended analog circuit (see ¶ 7.6.2) is not a perfect model of a silicon layer being contacted by four metallic probes, with possible rectifying effects. The most effective use of the analog circuit to test the electrical instrumentation for possible error voltage during measurement requires that readings from opposite current polarities be treated separately, and not averaged. In this manner, the calculated standard deviation of the analog measurements has enhanced sensitivity to possible error voltages.

4 Referenced Standards and Documents

4.1 *SEMI Standards and Safety Guidelines*

SEMI C19 — Specification for Acetone

SEMI C28 — Specification and Guide for Hydrofluoric Acid

SEMI C31 — Specification for Methanol

SEMI C59 — Specification for Nitrogen

SEMI M59 — Terminology for Silicon Technology

SEMI MF42 — Test Method for Conductivity Type of Extrinsic Semiconducting Materials

SEMI MF1529 — Test Method for Sheet Resistance Uniformity Evaluation by In-Line Four-Point Probe with the Dual-Configuration Procedure

SEMI MF2074 — Guide for Measuring Diameter of Silicon and Other Semiconductor Wafers

4.2 *ASTM Standards*[1]

ASTM D5127 — Guide for Ultra-Pure Water Used in the Electronics and Semiconductor Industries

ASTM E177 — Practice for Use of the Terms Precision and Bias in ASTM Test Methods

ASTM E2251 — Specification for Liquid-in-Glass ASTM Thermometers with Low-Hazard Precision Liquids

NOTICE: Unless otherwise indicated, all documents cited shall be the latest published versions.

5 Terminology

5.1 Terms relating to silicon and other semiconductor technology are defined in SEMI M59.

6 Summary of Test Method

6.1 An in-line four-point probe is used to determine the specimen sheet resistance.

6.2 A direct current is passed through the specimen between the outer probe pins, and the resulting potential difference is measured between the inner probe pins.

[1] ASTM International, 100 Barr Harbor Drive, West Conshohocken, PA 19428-2959, USA; Telephone: +1.610.832.9585, Fax: +1.610.832.9555, http://www.astm.org

SUPERSEDED
Documents Document Sharing Hub
Full document details: SEMI MF374-0312-0718R

6.3 The sheet resistance is calculated from the ratio of the measured voltage to current values using correction factors appropriate to the geometry.[2]

7 Apparatus

7.1 *Specimen Preparation*

7.1.1 Chemical laboratory apparatus such as plastic beakers, graduates, and plastic-coated tweezers suitable for use both with acids (including hydrofluoric) and with solvents. Adequate facilities for handling and disposing of acids and their vapors are essential.

7.1.2 Ultrasonic cleaner of suitable frequency (18 to 45 kHz) and adequate power.

7.2 *Measurement of Specimen Diameter* — A micrometer or Vernier caliper.

7.3 *Probe Head*

7.3.1 *Probe Pins*

7.3.1.1 *For Specimen Layers Having Thickness of 3 µm or Less* — Probe pins shall have blunt conical tips of a durable material such as tungsten carbide, with included angle in the nominal range from 45° to 150°. The probe tips shall terminate in a hemisphere with a radius in the nominal range from 100 to 250 µm, or in a flat circular truncation with a circle radius in the nominal range from 50 to 125 µm.

7.3.1.2 *For Specimen Layers Having Thickness Greater Than 3 µm* — Probe pins shall have sharp conical tips of a durable material such as tungsten carbide, with included angle in the nominal range from 45° to 150°. The probe tips shall terminate in a hemisphere with a radius in the nominal range from 35 to 100 µm.

7.3.2 *Probe Force* — For hemispherical-tipped probe pins with tip radius greater than 100 µm or for flat-tipped probe pins with tip radius greater than 50 µm, the force on each probe tip shall be in the range from 0.30 to 0.80 N (31 to 81 gf), inclusive, when the four-point probe is against the specimen in measurement position. For hemispherical-tipped probe pins with tip radius less than 100 µm, the force on each probe tip shall be 0.30 ± 0.03 N (31 ± 3 gf), inclusive, when the four-point probe is against the specimen in measurement position.

NOTE 6: The combination of probe tip radius and probe pin load that is chosen affects not only the immunity from probe tip penetration of very thin layers but also the electrical quality of contact and hence the noise and accuracy of measurement. The presence of higher resistivity values at the top surface of the silicon layer to be measured may require an increase in the force of probe pin or use of sharper probe tips. An example of this situation is a buried peak boron implant.

7.3.3 *Insulation* — The electrical isolation between a probe pin (with its associated spring and external lead) and any other probe pin or probe head part shall be at least 10^9 Ω.

7.3.4 *Probe Alignment and Separation* — The four probe tips shall be in an equally spaced linear array. The separations between adjacent probe tips shall have a nominal value of 1.59 mm (0.0625 in.). Other nominal probe spacings such as 1 and 0.6 mm (0.040 and 0.025 in.) are suitable for non-reference measurements. The spacing between probe pins shall be determined in accordance with the procedure of ¶ 11.1 in order to establish the suitability of the probe head. The following apparatus is required for this determination:

7.3.4.1 *Probe Tip Test Surface* — Piece of material such as porous silicon or germanium that is softer than single crystal silicon, for use with blunt probes, and a slice or block of silicon for use with sharp probe tips as designated for layers more than 3 µm thick. In each case the surface of the piece of material must be polished and have a flatness characteristic of semiconductor wafers used in microelectronic device fabrication. The surface must have lateral dimensions adequate to span the outermost of the probe tips.

7.3.4.2 Micrometer movement capable of moving the probe head or silicon surface in increments in the nominal range from 0.05 to 0.10 mm in a direction perpendicular to a line through the probe tips and parallel to the plane of the surface.

7.3.4.3 Toolmaker's microscope or other traveling microscope capable of measuring increments of 2.5 µm.

[2] Smits, F. M. "Measurement of Sheet Resistivities with the Four-Point Probe." Bell System Tech. J. **37**, 711 (1948); Swartzendruber, L. J., *Correction Factor Tables for Four-Point Probe Resistivity Measurements on Thin, Circular Semiconductor Samples*, NBS Technical Note 199, April 15, 1964. Available as AD 683 408 from National Technical Information Service, Springfield, Va. 22161, USA.

SUPERSEDED
Documents
Document Sharing Hub
Full document details: SEMI MF374-0312-0718R

7.3.4.4 Microscope with a magnification of at least 600× with an eyepiece magnification no greater than 15×.

7.4 *Specimen and Probe Pin Supports*

7.4.1 *Specimen Support* — A copper block at least 100 mm (4 in.) in diameter and at least 38 mm (1.5 in.) thick, or a rectangular block of equivalent mass and thickness, shall be used to support the specimen and provide a heat sink. For adequate heat transfer, vacuum clamping or other means for rigidly clamping the specimen to the heat sink is necessary. The heat sink shall contain a hole to accommodate a thermometer (see ¶ 7.5) in such a manner that the center of the bulk of the thermometer shall be not more than 10 mm below the central area of the heat sink where the specimen is placed (see Figure 1). Comparable provision for the installation of a thermocouple, thermistor, or resistance temperature detector (RTD) may be made instead. An insulating disk, less than 0.076 mm thick and suitably perforated, shall be placed over the center area of the copper to provide electrical isolation between the specimen and the heat sink. Mineral oil or silicone heat sink compound shall be used between the insulating disk and the copper block to reduce the thermal resistance. The heat sink shall be arranged so that the center of the four-point probe array can be placed within 1 mm of the center of the specimen (see Note 7). The heat sink shall be connected to the ground point of the electrical measuring apparatus (see ¶ 7.6). The heat sink shall be at a temperature of 23 ± 1°C during measurement

NOTE 7: Shallow rings, concentric with the center of the copper block, may be machined into the heat sink in order to assist in rapid centering of wafers.

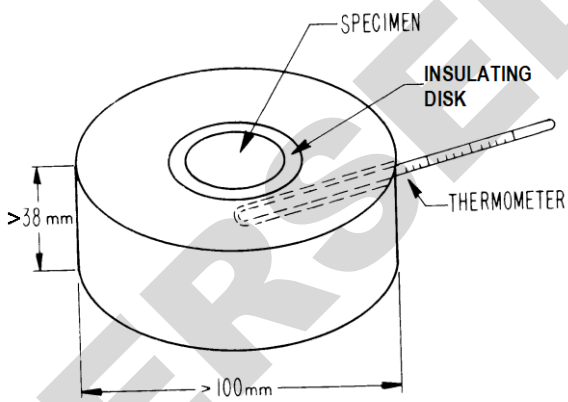

Figure 1
Heat Sink with Specimen, Mica Insulator, and Thermometer

7.4.2 *Probe Assembly Support* — The probe head support shall allow the probe pins to be lowered onto the surface of the specimen with no evidence of lateral movement of the probe tips as observed under a magnification of at least 600× using an eyepiece having a magnification no larger than 15×.

7.5 *Thermometer* — ASTM Precision Thermometer covering a range from −8°C to 32°C and conforming to the requirements for Thermometer S63°C as prescribed in ASTM E2251. The thermometer hole shall be filled with mineral oil or silicone heat sink compound to provide good thermal contact between heat sink and thermometer.

7.5.1 A thermocouple, thermistor, or RTD known to be accurate to at least 0.1°C over the range of normal room temperatures may be mounted, instead of the glass bulb thermometer, in a comparable location in the heat sink.

SUPERSEDED

Documents Document Sharing Hub
Full document details: SEMI MF374-0312-0718R

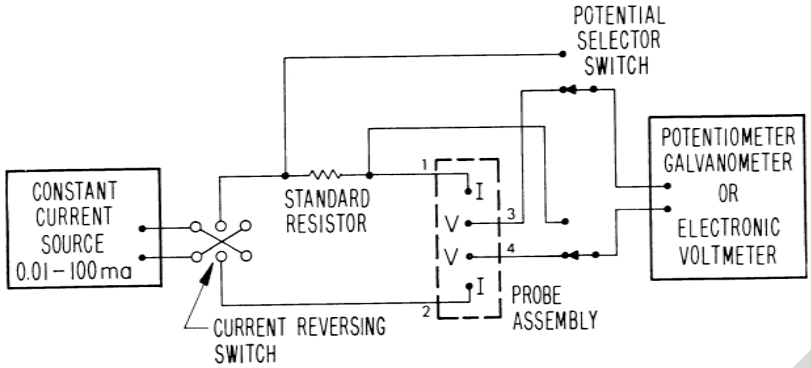

Figure 2
Recommended Electrical Circuit

7.6 *Electrical Measuring Apparatus*

7.6.1 Any circuit that meets the requirements of ¶ 11.2.3 may be used to make the electrical measurements. The recommended circuit, connected as shown in Figure 2, consists of the following:

7.6.1.1 *Constant-Current Source* — The value of current to be used depends on the layer sheet resistance and shall be selected so that the potential difference across the inner probes is between 2 and 60 mV. Currents between 10^{-6} and 10^{-2} A are required if the sheet resistance range 1 to 25,000 Ω inclusive is to be covered (see Table 1).

Table 1 Current Values Required for Measurements of Sheet Resistance

Sheet Resistance (Ω)	*Current*[#1]
2–25	10 mA
20–250	1 mA
200–2,500	100 µA
2,000–25,000	10 µA

#1 The proper value of current depends on layer thickness and probe spacing in addition to layer sheet resistance. The current used shall be stable to within 0.05% during the time of measurement and shall be selected to give a measured specimen voltage between 5 and 20 mV, inclusive. The overlap in ranges in the table is intentional since the table illustrates starting points for current selection.

7.6.1.2 *Double-Pole, Double-Throw Current-Reversing Switch*

7.6.1.3 *Standard Resistor* — The resistance of the standard resistor shall be selected to yield a potential difference that is in the range from 0.1 to 10 times the potential difference measured across the layer when using the appropriate current value for the layer. Recommended resistances for various layer sheet resistance ranges are given in Table 2. Such a standard resistor is not needed when using a precision current supply that is known to have an output accuracy of 0.1% or better of the nominal set point value for the measurement being made.

7.6.1.4 *Electronic Voltmeter* — Instrument to read the potential drop in volts or (when calibrated in conjunction with the current source) to read the volt-current ratio directly. The instrument shall be capable of measuring potential differences between 10^{-3} V and 10^{-1} V full scale and be able to resolve increments as small as 0.1% of full scale for each range, and must have a dc input resistance of 10^{9} Ω or greater.

NOTE 8: A smaller range of full-scale voltages may be sufficient if only a limited range of specimen resistivity values is to be measured.

7.6.2 *Analog Test Circuit* — Five resistors connected as shown in Figure 3 shall be used in testing the electrical measuring apparatus according to the procedure given in ¶ 11.2.1. The resistance of the central resistor, *r*, shall be selected according to the sheet resistance of the layer to be measured as listed in Table 2.

SUPERSEDED

Documents
Document Sharing Hub
Full document details: SEMI MF374-0312-0718R

7.7 *Conductivity-Type Determination* — Apparatus in accordance with Test Method A of SEMI MF42.

7.8 *Ohmmeter* — Resistance measuring instrument capable of indicating any leakage resistance up to 10^9 Ω.

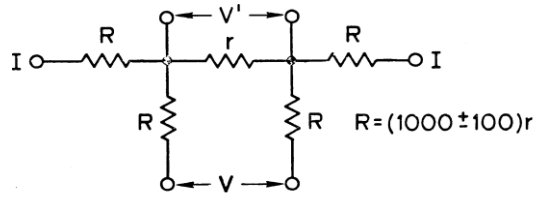

#1 See Table 2 for appropriate values of *r*.

Figure 3
Analog Test Circuit to Simulate Measurement with a Four-Point Probe

Table 2 Sheet Resistance Range Appropriate to Analog Test Circuit Resistance, *r*, and Recommended Standard Resistance, R_s, Values

Sheet Resistance (Ω)	*Resistance of Analog and Standard Resistor (Ω)*[#1]
2–25	10
20–250	100
200–2,500	1,000
2,000–25,000	10,000

#1 The resistance shall be within a range from one half to twice the nominal value given, inclusive, and shall be known to ±0.05%. The value of the standard resistor, *r* (see Figure 1), should be chosen to yield a voltage drop comparable to that measured across the specimen.

8 Reagents and Materials

8.1 *Purity of Reagents* — All chemicals for which such specifications exist shall conform to the assay and to impurity levels of Grade 1 SEMI Specifications for the appropriate chemical. Other grades may be used provided it is first ascertained that the reagent is of sufficiently high purity to permit its use without lessening the accuracy of the determination.

8.2 *Purity of Water* — Reference to water shall be understood to mean Type E-3 or better water as described in ASTM D5127.

8.3 *Acetone ($[CH_3]_2CO$)* — As specified in SEMI C19.

8.4 *Dry Nitrogen* — In accordance with Grade 5.2 of SEMI C59.

8.5 *Hydrofluoric Acid (HF)* — 49 ± 0.25%, in accordance with Grade 1 of SEMI C28.

8.6 *Methanol (CH_3OH)* — As specified in SEMI C31.

8.7 Mineral Oil or Silicone Heat Sink Compound.

9 Hazards

9.1 The chemicals used in this evaluation procedure are potentially harmful and must be handled in an acid exhaust fume hood, with utmost care at all times.

9.1.1 **WARNING:** Hydrofluoric acid solutions are particularly hazardous. They should not be used by anyone who is not familiar with the preventive measures and first aid treatments given in the appropriate material safety data sheet.

SUPERSEDED

Documents Document Sharing Hub
Full document details: SEMI MF374-0312-0718R

9.2 Constant-current supplies are capable of producing high output voltages if not connected to an external circuit. Therefore, any changes of circuits connected to a constant-current supply should be made either with the current supply turned off or with its output short circuited.

10 Preparation of Test Specimen

10.1 Determine the average specimen diameter by measuring individual specimen diameters as follows. For specimens that are expected to be more than 48 mm (1.9 in.) in diameter, measure the length of three diameters selected in accordance with SEMI MF2074. For smaller specimens, measure five diameters at angular separations of 30° to 45°. Do not measure along any diameter that intersects an orientation notch or flat. Determine and record the average value of diameter $\overline{D}$ in mm. For the specimen to be suitable, $\overline{D}$ must be greater than 10 times the average probe spacing, $\overline{S}$ (see ¶ 11.1.2.4), and the sample standard deviation of the diameter measurements shall be less than $\overline{D}/5\overline{S}$ % of the average diameter $\overline{D}$.

10.2 Determine the conductivity type of the layer to be measured and the substrate of the specimen according to Method A of SEMI MF42 if conductivity types are unknown. Follow the procedure as given in SEMI MF42 except that the surfaces shall be cleaned in accordance with ¶ 12.2 of this Test Method. The layer and substrate must be of opposite conductivity type in order to make sheet resistance measurements.

11 Suitability of Test Equipment

11.1 *Probe Head* — Establish the spacing between probe pins and probe tip condition in the following manner immediately prior to each reference test.

NOTE 9: This test procedure need be performed only once even if several specimens are to be measured during a single reference test.

11.1.1 *Procedure*

11.1.1.1 Make a series of indentations of the probe tips on a polished silicon surface or other polished surface (depending on the sharpness of the probe tips, see ¶ 7.3.4.1) with the four-point probe. Make these indentations by applying the probe tips to the surface using loads as specified in ¶ 7.3.2. Lift the probe pins, and move either the chosen polished surface or the probe head 0.05 to 0.10 mm in a direction perpendicular to the line through the probe tips. Again, apply the probe tips to the polished surface. Repeat the procedure until a series of ten indentation sets is obtained.

NOTE 10: It is recommended that the surface or the probes be moved twice the usual distance after every second or every third indentation set in order to assist the operator in identifying the indentations belonging to each set.

11.1.1.2 Inspect the specimen. If stains are observed in the region of the indentations, ultrasonically degrease the specimen in acetone, rinse with methanol, and let dry. Omit the cleaning step if no stains are observed.

11.1.1.3 Place the chosen polished specimen on the stage of the toolmaker's microscope so that the *Y*-axis readings (Y_A and Y_B in Figure 4) do not differ by more than 0.15 mm (0.006 in.). For each of the ten indentation sets record the readings *A* through *H* (defined in Figure 4) on the *X*-axis of the toolmaker's microscope and the readings Y_A and Y_B on the *Y*-axis, both in mm. Record these data to the nearest 2.5 µm. Use a data sheet similar to that shown in Figure 5.

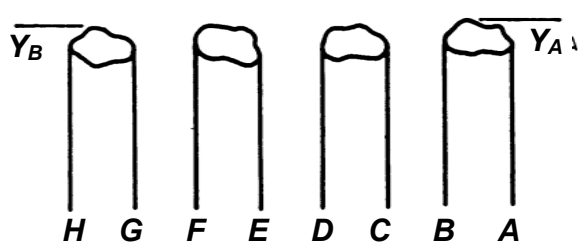

Figure 4
Measurement Locations for Probe Tip Indentation Patterns

SUPERSEDED

Documents
Document Sharing Hub
Full document details: SEMI MF374-0312-0718R