SEMI MF525-0312 (Reapproved 0718)
TEST METHOD FOR MEASURING RESISTIVITY OF SILICON WAFERS USING A SPREADING RESISTANCE PROBE

This Standard was technically approved by the Silicon Wafer Global Technical Committee. This edition was approved for publication by the global Audits and Reviews Subcommittee on February 1, 2018. Available at www.semiviews.org and www.semi.org in July 2018; original edition published by ASTM International as ASTM F525-77T; previously published March 2012.

NOTICE: This Document was reapproved with minor editorial changes.

SUPERSEDED

1 Purpose

1.1 This Test Method provides means for directly determining the resistivity of a substrate or of an epitaxial layer of thickness greater than 20 times the effective electrical contact radius. Unlike SEMI MF84, SEMI MF374, and SEMI MF1392, it can provide lateral spatial resolution of resistivity on the order of a few micrometers.

1.2 This Test Method is intended primarily for use in process control, research, and development applications. In the absence of between laboratory precision data, this Test Method is not recommended for use between supplier and customer unless correlation experiments have been conducted between the parties.

2 Scope

2.1 This Test Method covers the measurement of the resistivity of a silicon substrate of known orientation and type, or of a uniform silicon epitaxial layer of known orientation and type that is deposited on a substrate of the same or opposite type. Resistivity of the epitaxial films can be evaluated without the necessity of thin film correction factors provided that the ratio of layer thickness to effective probe contact radius is greater than 20.

2.2 This Test Method is comparative in that the resistivity of an unknown specimen is determined by comparing its measured spreading resistance with that of calibration standards of known resistivity. These calibration standards must have the same surface finish, conductivity type, and orientation as the unknown specimen.

NOTE 1: Although a structure may consist of several epitaxial layers on a substrate, in which case each layer is separated from a neighboring layer (or the substrate) by an interface region, this Test Method applies to a structure with a single layer. With suitable modification, it can be extended to the multiple layer case, but these modifications have not been evaluated.

2.3 This Test Method is intended for use on silicon substrates and epitaxial layers. Within-laboratory precision has been determined through a multilaboratory experiment on substrates having resistivities from 0.01 to 200 Ω·cm.

2.3.1 The principles of this Test Method can be extended to lower and higher specimen resistivity values, but the precision of the test method has not been evaluated for values other than those in the range given in ¶ 2.3.

2.4 This Test Method is nondestructive in the sense that the specimen is not totally destroyed in making the measurements, the specimen need not be cut into a special shape, and no destructive processing need be done on the specimen. However, the probe can produce mechanical damage that may be detrimental to a device fabricated in the probed area.

2.5 The volume of semiconductor material sampled is proportional to the third power of the effective electrical contact radius of the probe. For an effective electrical contact radius of 2 µm, the volume sampled by a single probe is approximately 10^{-11} cm^{-3}.

NOTICE: SEMI Standards and Safety Guidelines do not purport to address all safety issues associated with their use. It is the responsibility of the users of the Documents to establish appropriate safety and health practices, and determine the applicability of regulatory or other limitations prior to use.

3 Limitations

3.1 *Temperature* — Spreading resistance measurements are sensitive to the temperature of the specimen. Therefore, it is important that the calibration and actual measurements be made at the same temperature.

Documents Document Sharing Hub

Full document details: SEMI MF525-0312-0718R

3.2 *Light* — Photoconductive and photovoltaic effects can seriously influence the resistance determined by this Test Method, especially on wafers with *p-n* junctions. All determinations shall be made in a dark chamber, or if experience shows that the material is insensitive to illumination of this type, in diffuse room light.

3.3 *Radio-Frequency Fields* — Spurious currents can be introduced in the testing circuit when the equipment is located near high-frequency generators. If equipment is located near such sources, adequate shielding must be provided.

3.4 *Mechanical Vibrations* — The apparatus may be sensitive to building or other vibrations. Therefore, the probe should be located in an area free from significant vibrations. It may be desirable to mount the probe assembly on a vibration-free table.

3.5 *Minority Carrier Injection* — Caution should be taken to prevent minority carrier injection during the measurement. Experience has shown that if the potential on the probe is kept to 20 mV or less, minority carrier injection does not occur.

3.6 *Reactive Atmosphere* — Exposure of the probe or specimen to reactive atmospheres, such as those produced in the vicinity of epitaxial reactors or by high humidity, leads to changes in the characteristics of the instrument and to non-reproducible measurements. Probes and specimens shall be protected from such exposure. Relative humidity in excess of 60% shall be avoided.

3.7 *Semiconductor Surfaces*

3.7.1 *Surface Instability* — It has been found that spreading resistance measurements made on surfaces that have been exposed to an aqueous solution may be erratic. Surfaces exposed to solutions containing fluorine ions may also exhibit instability. The heat treatment included in the procedure (see ¶ 13.5) may reduce these instabilities.

3.7.2 *Surface Damage* — Spreading resistance measurements made in areas of severe or nonuniform mechanical damage may give erroneous results. Such damage may be caused by previous spreading resistance probe marks.

3.8 *Correction Factors* — When the ratio of epitaxial layer thickness, *t*, to the effective electrical contact radius of the probe, *a*, is less than 20, it is necessary to employ correction factors to determine the correct resistivity value from the spreading resistance measurement.[1]

4 Referenced Standards and Documents

4.1 *SEMI Standards and Safety Guidelines*

SEMI E89 — Guide for Measurement System Analysis (MSA)

SEMI M59 — Terminology for Silicon Technology

SEMI MF26 — Test Method for Determining the Orientation of a Semiconductive Single Crystal

SEMI MF42 — Test Method for Conductivity Type of Extrinsic Semiconducting Materials

SEMI MF84 — Test Method for Measuring Resistivity of Silicon Slices with an In-line Four-point Probe

SEMI MF95 — Test Method for Thickness of Lightly Doped Silicon Epitaxial Layers on Heavily Doped Silicon Substrates Using an Infrared Dispersive Spectrophotometer

SEMI MF110 — Test Method for Thickness of Epitaxial or Diffused Layers in Silicon by the Angle Lapping and Staining Technique

SEMI MF374 — Test Method for Sheet Resistance of Silicon Epitaxial, Diffused Polysilicon, and Ion-implanted Layers Using an In-Line Four-Point Probe with the Single-configuration Procedure

SEMI MF1392 — Test Method for Determining Net Carrier Density Profiles in Silicon Wafers by Capacitance-Voltage Measurements with a Mercury Probe

[1] Dickey, J. H. "Two-Point Probe Correction Factors." in *Semiconductor Measurement Technology:* Spreading Resistance Symposium, NBS Special Publication 400-10, December 1974, Ehrstein, J. R., Ed., pp. 45–50. Available from the Superintendent of Documents, U. S. Government Printing Office, Washington, DC 20402, USA. SD Catalog Number C13.10:400-10.

SUPERSEDED
Documents
Document Sharing Hub
Full document details: SEMI MF525-0312-0718R

4.2 *ASTM Standard*[2]

ASTM E2251 — Standard Specification for Liquid-in-Glass ASTM Thermometers with Low-Hazard Precision Liquids

NOTICE: Unless otherwise indicated, all documents cited shall be the latest published versions.

5 Terminology

5.1 Terms relating to silicon and other semiconductor technology are defined in SEMI M59.

6 Summary of Test Method

6.1 The spreading resistance of a reproducibly formed point contact is measured.

6.2 The resistivity of the material in the vicinity of the probe is determined from a calibration curve derived from spreading resistance measurements made under the same conditions on reference specimens of known resistivity.

6.3 The spreading resistance may be measured with the use of one, two, or three probes and (1) by applying a known constant voltage and measuring the current, (2) by applying a known constant current and measuring the voltage, or (3) by a resistance comparator technique.

7 Apparatus

7.1 *Mechanical Apparatus*

7.1.1 *Probes and Probe Assembly* — A spreading resistance probe assembly with provision for supporting and lowering either one, two, or three replaceable probe tips to the wafer surface at a reproducible rate and with a predetermined load. The supporting mechanism shall provide for spatial displacement of the probes for adjustment of the point of contact.

NOTE 2: In a three-probe arrangement, the experimental conditions approximate those of the definition (based on a single probe) and the spreading resistance R_s, in Ω, is given by:

$$R_s = \frac{V}{I} \tag{2}$$

where V = the potential drop between one of the current-carrying probes and the reference (noncurrent carrying) probe on the front surface (in mV), and I = current through the metal probe (in mA). In a two-probe arrangement, the potential drop, V, is measured between two similar current-carrying probes. In this case, the voltage-to-current ratio, and hence the spreading resistance, is approximately twice that associated with a single probe.

7.1.1.1 *Probe Tip Material* — A hard, durable, low-resistance substance that wears well without flaking, such as osmium, tungsten carbide, or tungsten-ruthenium alloys.

7.1.1.2 *Probe Tip Radius* — The mechanical radius of curvature of the probe tips in the region that will touch the specimen shall be less than or equal to 25 µm. The tip angle of the probe shall be within the range from 30° to 60°, inclusive.

7.1.1.3 *Probe Loading and Descent Rate* — The loading applied to each point shall be less than 50 gf (490 mN). A 1-mm/s descent rate has been found to be adequate for a 40 gf (390 mN) load (see ¶ 11.3 and Note 5).

7.1.1.4 *Probe Spacing* — As used for calibration (see § 15).

NOTE 3: Typical probe spacings are between 15 and 1000 µm.

7.1.1.5 *Probe Insulation* — A dc isolation resistance of 1 GΩ or greater between any pair of probes and between each probe and any guard circuit used.

7.1.2 *Sample Holder* — An insulated vacuum chuck or other means for clamping the substrate tightly while measurements are made.

[2] ASTM International, 100 Barr Harbor Drive, West Conshohocken, PA 19428-2959, USA; Telephone: +1.610.832.9585, Fax: +1.610.832.9555, http://www.astm.org

SUPERSEDED
Documents Document Sharing Hub
Full document details: SEMI MF525-0312-0718R

NOTE 4: The vacuum chuck may be inserted on a high-resolution translatable microscope stage with drum calibrated preferably in metric units. Gear boxes for stage movement should allow step-size movements in the range from 5 to 500 µm per step, inclusive. Usual increments are 5, 10, 25, and multiples of 10 thereof.

7.2 *Electrical Measuring Apparatus*

7.2.1 *Constant-Voltage Method* — Suitable for use with the one- or two-probe arrangement (see Figure 1).

7.2.1.1 *DC Voltage Source* — With a constant output between 1 and 20 mV, inclusive. The output potential shall be constant to within ±0.1% into a load that varies from 1 Ω to 10 MΩ, inclusive.

7.2.1.2 *DC Current Detector* — Accurate to within ±0.1% and capable of covering the range from 10 mA to 1 pA, inclusive.

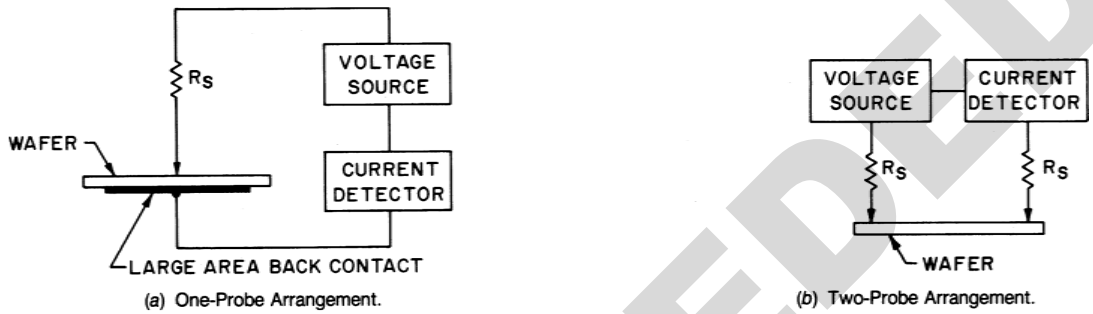

Figure 1
Electrical Circuits for the Constant-Voltage Method

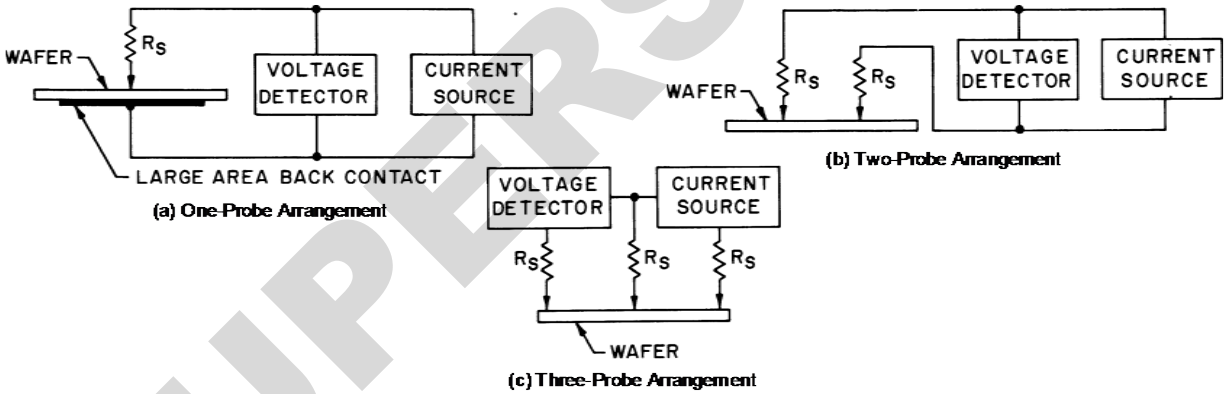

Figure 2
Electrical Circuits for the Constant-Current Method

7.2.2 *Constant-Current Method* — Suitable for use with the one-, two-, or three-probe arrangement (see Figure 2).

7.2.2.1 *Variable DC Current Source* — Capable of providing currents from 10 nA to 10 mA, inclusive. The current source shall be accurate to within ±0.1% and capable of providing a current of 10 nA into a 10 MΩ load. **CAUTION:** For safety reasons the compliance voltage shall not exceed 40 V.

7.2.2.2 *DC Voltage Detector* — Linear over the range from 1 to 100 mV, inclusive, and accurate to within ±0.1% of the reading. The input impedance shall be 10 MΩ or greater.

7.2.3 *Comparator Method* — Suitable for use with the one- or two-probe arrangement (see Figure 3).

7.2.3.1 *DC Voltage Source* — With a constant output between 1 and 20 mV, inclusive, but no special requirements on the precision.

SUPERSEDED

Documents
Document Sharing Hub
Full document details: SEMI MF525-0312-0718R

7.2.3.2 *Log Comparator* — With an output voltage proportional to the logarithm of the ratio of two currents. Together with its standard resistor, R_0, the comparator shall be capable of measuring resistances from 1 Ω to 10 MΩ inclusive, with a deviation from linearity not greater than ±1%.

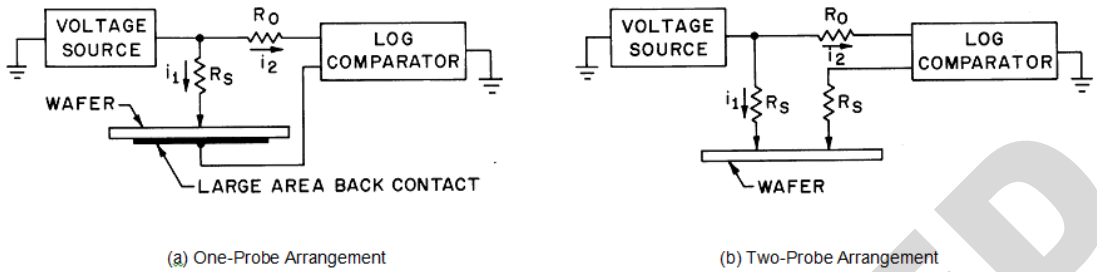

Figure 3
Electrical Circuits for the Log Comparator Method

7.2.3.3 *Standard Resistor* — Nominally 10 kΩ, known to an accuracy of ±0.1%.

7.3 *Microscope* — Capable of a magnification of at least 400×.

7.4 *Thermometer* — An ASTM Precision Thermometer having a range from −8°C to +32°C, inclusive, and conforming to the requirements for Thermometer S63C as described in ASTM E2251.

8 Reagents and Materials

8.1 *Resistivity Standards for Calibration*

8.1.1 Resistivity standards shall be chosen from substrates in the resistivity range of the unknowns in accordance with § 12.

NOTE 5: It is desirable to use at least three resistivity values per decade of resistivity. For applications where spreading resistance measurements are being used to sort material within a narrow resistivity range (one decade or less) it may be necessary to have 8 or 10 calibration specimens spanning the decade of interest to compensate for the resistivity averaging effect of a four probe on nonhomogeneous calibration specimens. This is particularly important for resistivity ranges where calibration material is found to have significant fine-scale resistivity variations (striations).

8.1.2 The standards shall match the conductivity type and orientation of the test specimens. The surface finish of the standards shall match the surface finish of the test specimens as closely as possible. For use in connection with epitaxial layer test specimens, standards shall have a polished surface.

8.2 A *p*-type silicon specimen of uniform resistivity with a (111) orientation, for which the typical spreading resistance per probe tip is between 300 and 1000 Ω, shall be used to ensure that the probe tips are properly conditioned (see ¶ 11.4.1).

NOTE 6: An epitaxial layer of 0.1 to 1 Ω·cm, 10 µm or thicker is acceptable.

8.3 A substrate, lapped or ground with 5 µm grit slurry or a tape or cloth coated with an abrasive grit of 8,000 to 12,000 grade, shall be used for conditioning the probe tips (see ¶ 11.4).

8.4 *Specimen Preparation Materials* — Consisting of polishing materials and pads or other backing plates, as follows:

8.4.1 *Silica Powder* — Colloidal or non-colloidal in aqueous suspension with pH from 7 to 11.5 and either hard plastic such as methyl methacrylate (for small area specimens) or a poromeric polishing pad of urethane or polyurethane foam with a napped or sueded surface and attached to a rigid backing plate (for large area specimens).

8.4.2 *Diamond Suspension* — In fluid or paste carrier with diamond in the range from 0.1 to 1 µm, together with (1) a glass plate lapped with aluminum oxide in the range from 5 to 12 µm (and thoroughly removed subsequent to lapping), for use with small area specimens, or (2) a nonwoven chemotextile polishing pad attached to a rigid backing plate, for use with large or small area specimens.

SUPERSEDED

Documents Document Sharing Hub
Full document details: SEMI MF525-0312-0718R

8.4.3 *Aluminum Oxide* — 0.3 µm particle size in water together with a nonwoven chemotextile polishing pad bonded to a rigid backing plate.

8.4.4 *Aluminum Oxide* — 5 µm particle size, together with a frosted glass or cast iron lapping plate.

9 Safety Precautions

9.1 Use normal safety precautions in operating the electrical equipment.

10 Sampling

10.1 Since the most suitable sampling plan depends upon individual conditions, no general sampling procedure is included here. For referee purposes a sampling plan shall be agreed upon by the parties to the test before the tests are started.

11 Preparation of Apparatus

11.1 Adjust the probe separation to the desired value if a multiple-probe arrangement is employed. Record the probe separation.

11.2 Choose a loading in the range from 10 to 100 gf (98 to 980 mN), inclusive, to be applied to the probes. In a multiple-probe arrangement, use the same loading for each probe.

11.3 Once the loading on the probes has been chosen, determine an appropriate descent rate of the probes on the specimen to minimize damage to the points and avoid fracturing the specimen.

NOTE 7: The descent rate specified in ¶ 7.1.1.3 is adequate for a load of 40 gf (390 mN).

11.4 Condition probe tips by stepping them at least 500 times on a silicon substrate that has been ground with 5 µm grit slurry (see ¶ 8.3) or very lightly abrade the individual probe tips using the abrasive cloth or tape.

NOTE 8: It is permissible to leave the slurry on the substrate during conditioning, but it must be removed from probe tips before measuring test specimens.

11.4.1 Measure the spreading resistance of the uniform *p*-type silicon specimen (see ¶ 8.2) in accordance with ¶¶ 13.4 through 14.2. Consider the probes to be satisfactory if the measured spreading resistance is within ±10% of the usual value that has been found to be consistent over a long period of time.

11.4.2 If the probes are not satisfactory, repeat the conditioning step or use new probe tips.

11.5 Using the microscope at 400×, examine the probe marks for reproducibility (see Note 9). If the probe marks from a given probe do not appear similar, recondition (see ¶ 11.4) or replace the probe.

NOTE 9: All the marks from a specific probe should appear to be similar. Probe imprints from different probes need not be identical.

11.6 If the two-probe arrangement is being employed, verify that the spreading resistances of the two probes are equal to within 10% when measured on the uniform *p*-type specimen (see ¶ 8.2) using the one-probe configuration. If they are not, recheck or adjust the loading (see ¶ 11.2) and descent rate (see ¶ 11.3) to be equal on both probes. If satisfactory results are not achieved with equal probe loading and descent rate, recondition (see ¶ 11.4) or replace the probes.

11.7 Connect the appropriate electrical circuit (see Figures 1 through 3). If a voltage source is used (constant-voltage or log comparator methods), adjust the potential to 20 mV or less. If a current source is used (constant-current method), short circuit the output.

11.8 Note and record the voltage to be applied in millivolts as V (constant-voltage method), the current to be applied in milliamperes as I (constant-current method), or the value of the standard resistor in ohms as R_0 (log comparator method).

12 Calibration

12.1 Measure the resistivity of the specimens to be used as standards (see ¶ 8.1) at 23 ± 3°C in accordance with SEMI MF84, if not previously measured. Record the results or the previously determined value.

12.2 Prepare the surface of the calibration specimens using the materials of ¶¶ 8.4.1, 8.4.2, 8.4.3, or 8.4.4 using manual or machine procedures, the choice of materials and procedure being governed only by the requirement that

SUPERSEDED

Documents
Document Sharing Hub
Full document details: SEMI MF525-0312-0718R