SEMI MF84-0312 (Reapproved 1023)
TEST METHOD FOR MEASURING RESISTIVITY OF SILICON WAFERS WITH AN IN-LINE FOUR-POINT PROBE

This Standard was technically approved by the Silicon Wafer Global Technical Committee. This edition was approved for publication by the global Audits and Reviews Subcommittee on August 21, 2023. Available at www.semiviews.org and www.semi.org in October 2023; originally published by ASTM International as ASTM F84-67T; previously published July 2018.

NOTICE: The section symbol (§) is used to reference a numbered section, paragraph, or header and all subordinate paragraphs, headers, and embedded material (i.e., EXCEPTIONs, lists) therein. The paragraph symbol (¶) is used to reference a particular numbered paragraph and embedded material therein. When duplicated (i.e., §§ and ¶¶) the symbols are used to reference more than one section or paragraph, respectively.

NOTICE: Paragraphs entitled 'NOTE:' are not an official part of this Standard or Safety Guideline and are not intended to modify or supersede the official Standard or Safety Guideline. These have been supplied by the global technical committee to enhance the usage of the Standard or Safety Guideline.

1 Purpose

1.1 The resistivity of a silicon wafer is an important materials acceptance requirement.

1.2 Resistivity values measured by this Test Method are a primary quantity for characterization and specification of silicon wafers used for fabrication of semiconductor ICs and other electron devices.

2 Scope

2.1 This Test Method[1] covers the measurement of the resistivity of silicon wafers with an in-line four-point probe. This Test Method describes a procedure that enables inter-laboratory comparisons of the room temperature resistivity of silicon wafers. The precision that can be expected depends on both the resistivity of the wafer and on the homogeneity of the wafer. Round-robin tests have been conducted to establish the expected precision for measurements on *p*-type wafers with room temperature (23°C) resistivity between 0.0008 Ω·cm and 2000 Ω·cm and on *n*-type wafers with room temperature (23°C) resistivity between 0.0008 Ω·cm and 6000 Ω·cm.

2.2 This Test Method is intended for use on single crystals of silicon in the form of circular wafers with a diameter greater than 16 mm (0.625 in.) and a thickness less than 1.6 mm (0.0625 in.). Geometrical correction factors required for these measurements are available in tabulated form.[2]

2.3 Procedures for preparing the specimen, for measuring its size, and for determining the temperature of the specimen during the measurements are also given.

2.4 This Test Method includes procedures for checking both the probe head and the electrical measuring apparatus.

2.4.1 The spacing between the four-probe tips is determined from measurements of indentations made by the probe tips in a polished silicon surface. This test also is used to determine the condition of the probe tips.

2.4.2 The accuracy of the electrical measuring equipment is tested by means of an analog circuit containing a known standard resistor together with other resistors that simulate the resistance at the contacts between the probe tips and the semiconductor surface.

[1] DIN 50431, Testing of Inorganic Semiconductor Materials: Measurement of the Specific Electrical Resistance of Monocrystals of Silicon or Germanium by the Four-Point Direct-Current Technique with Linearly Arranged Probes, is a similar, but not equivalent, method that is equivalent to the four-probe method of SEMI MF43. It is the responsibility of DIN Committee NMP 221 and is available in both German and English editions from Beuth Verlag GmbH, Burggrafenstrasse 6, 10787 Berlin, Germany, Telephone: +49.30.2601-0; Fax: +49.30.2601.1263; Website: http://www.beuth.de.

[2] Smits, F. M. "*Measurement of Sheet Resistivities with the Four-Point Probe*." Bell System Tech. J. **37** (1958): pp. 711–718; Swartzendruber, L. J. "Correction Factor Tables for Four-Point Probe Resistivity Measurements on Thin, Circular Semiconductor Samples." NBS Technical Note 199, National Bureau of Standards, April 15, 1964. Available as AD 683 408 from National Technical Information Service, Springfield, VA 22161, USA.

Documents Document Sharing Hub

Full document details: SEMI MF84-0312-1023R

2.5 The current level, probe force, and specimen surface preparation specified in this Test Method are to be preferred for all referee measurements on bulk silicon wafers. However, many changes in these conditions may be made for non-referee applications without severe changes in measurement results.[3]

2.6 A table of temperature coefficient as a function of resistivity and abbreviated tables of correction factors appropriate to circular wafer geometry are included with the test method so that appropriate calculations can be made conveniently.

2.7 This Test Method is to be used as a referee method for determining the resistivity of single crystal silicon wafers in preference to SEMI MF43.

NOTE 1: This Test Method is also applicable to other semiconductor materials, but neither the appropriate conditions of measurement nor the expected precision has been experimentally determined. Other geometries for which correction factors are not available can also be measured by this Test Method, but only comparative measurements using similar geometrical conditions should be made in such situations.

2.8 The values stated in SI units are to be regarded as the standard. Any values given in parentheses are for information only.

NOTICE: SEMI Standards and Safety Guidelines do not purport to address all safety issues associated with their use. It is the responsibility of the users of the Documents to establish appropriate safety and health practices, and determine the applicability of regulatory or other limitations prior to use.

3 Limitations

3.1 The accuracy of the resistivity as measured by this Test Method has not been determined. Systematic error is introduced by characteristic radial non-uniformities in the resistivity of silicon wafers and by the finite dimensions of the wafer. The magnitude of these errors is affected by the position of the probe head on the wafer; for referee measurements the probe head should be placed within 0.25 mm (0.01 in.) of the center of the wafer.

3.2 Systematic error may also be introduced in the measurement of the separation of the probe tips. The relative error in the determination of the probe-tip spacing decreases as the nominal probe-tip spacing increases; a four-point probe with nominal 1.59 mm (0.0625 in.) probe-tip spacing is required for referee measurements.

3.3 In making resistivity measurements, spurious results can arise from a number of sources.

3.3.1 Photoconductive and photovoltaic effects can seriously influence the observed resistivity, particularly with nearly intrinsic material. Therefore, all determinations should be made in a dark chamber unless experience shows that the material is insensitive to ambient illumination.

3.3.2 Spurious currents can be introduced in the testing circuit when the equipment is located near high frequency generators. If equipment is located near such sources, adequate shielding must be provided.

3.3.3 Minority carrier injection during the measurement can occur due to the electric field in the specimen. With material possessing high lifetime of the minority carriers and high resistivity, such injection can result in a lowering of the resistivity for a distance of several centimeters. Carrier injection can be detected by repeating the measurements at lower current. In the absence of injection, no increase in resistivity should be observed. For specimens thicker than 0.75 mm (0.030 in.) use of the currents recommended in Table 1 should reduce the probability of difficulty from this source to a minimum. In cases of doubt and for thinner specimens, the measurements of ¶¶ 12.4 and 12.5 should be repeated at a lower current. If the proper current is being used, doubling, or halving its magnitude should cause a change in observed resistance that is less than 0.5%.

3.3.4 Semiconductors have a significant temperature coefficient of resistivity. Consequently, the current used should be small to avoid resistive heating. If resistive heating is suspected, it can be detected by a change in readings as a function of time starting immediately after the current is applied.

3.3.5 Vibration of the probe sometimes causes troublesome changes in contact resistance. If difficulty is encountered, the apparatus should be shock mounted.

[3] Ehrstein, J. R., Brewer, F. H., Ricks, D. R., and Bullis, W. M. "Effects of Current, Probe, Force and Wafer Surface Condition on Measurement of Resistivity of Bulk Silicon Wafers by the Four-Probe Method." Appendix E, *Methods of Measurement for Semiconductor Materials, Process Control, and Devices*, *Quarterly Report, October 1 to December 31, 1972*, NBS Technical Note 773, National Bureau of Standards, June 1973, pp. 43–49. Available as COM 73-50534 from National Technical Information Service, Springfield, VA 22161, USA.

Documents
Document Sharing Hub
Full document details: SEMI MF84-0312-1023R

3.3.6 The temperature corrections given in this Test Method are valid only if the temperature of the specimen during measurement is held constant in the range from 18°C to 28°C.

3.3.7 It is not uncommon with modern digital voltmeters to find that the voltmeter itself provides a source of current of the order of 10 pA between its high and low input terminals. Currents of this magnitude generally have no effect on measurement accuracy for specimens below about 1000 Ω·cm. However, since such spurious currents flow through the contact resistance of the voltage sensing probes, which contact resistances may be many megohms for higher resistivity specimens, the result may be spurious voltages of several tens of microvolts. These spurious currents can often be reduced if the auto zero and auto calibration functions of the voltmeter can be suppressed. They generally are of fixed sign and the effect of the resulting spurious voltages can generally be cancelled by the use of forward and reverse current measurements (refer to ¶¶ 12.4 and 12.5).

3.3.8 It is common to find that the measurement guard terminal is the source of electrical spikes and other electrical noise components, often due to capacitive coupling to the instrument power supply in modern digital voltmeters. Since such noise may be rectified by the contact of the probes to the specimen, care should be taken when choosing where to connect the input guard lead to the measurement circuit.

3.4 The recommended analog circuit (refer to Figure 1) is not a perfect model of a semiconductor wafer being contacted by four metallic probes, with possible rectifying effects. The most effective use of the analog circuit to test the electrical instrumentation for possible error voltage during measurement requires that readings from opposite current polarities be treated separately, and not averaged. In this manner, the calculated standard deviation of the analog measurements has enhanced sensitivity to possible error voltages.

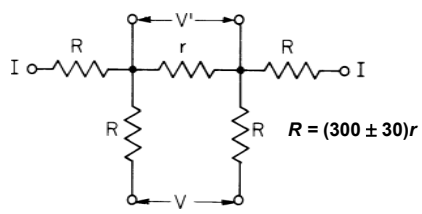

#1 Refer to Table 2 for appropriate values of *r*.

Figure 1
Analog Test Circuit to Simulate Measurement with a Four-Point Probe

4 Referenced Standards and Documents

4.1 *SEMI Standards and Safety Guidelines*

SEMI C19 — Specification for Acetone

SEMI C28 — Specification and Guide for Hydrofluoric Acid

SEMI C31 — Specification for Methanol

SEMI C35 — Specification and Guide for Nitric Acid

SEMI M59 — Terminology for Silicon Technology

SEMI MF42 — Test Method for Conductivity Type of Extrinsic Semiconducting Materials

SEMI MF43 — Test Method for Resistivity of Semiconductor Materials

SEMI MF1527 — Guide for Application of Certified Reference Materials and Reference Wafers for Calibration and Control of Instruments for Measuring Resistivity of Silicon

SEMI MF2074 — Guide for Measuring Diameter of Silicon and Other Semiconductor Wafers

Documents Document Sharing Hub
Full document details: SEMI MF84-0312-1023R

4.2 *ASTM® Standards*[4]

ASTM D5127 — Standard Guide for Ultra-Pure Water Used in the Electronics and Semiconductor Industries

ASTM E177 — Standard Practice for Use of the Terms Precision and Bias in ASTM Test Methods

ASTM E2251 — Standard Specification for Liquid-in-Glass ASTM Thermometers with Low-Hazard Precision Liquids

NOTICE: Unless otherwise indicated, all documents cited shall be the latest published versions.

5 Terminology

5.1 Terms relating to silicon and other semiconductor technology are defined in SEMI M59.

6 Summary of Test Method

6.1 An in-line four-point probe is used in determining the resistivity in this Test Method.

6.2 A direct current is passed through the specimen between the outer probe pins and the resulting potential difference is measured between the inner probe pins.

6.3 The resistivity is calculated from the measured current and potential values using factors appropriate to the geometry.

7 Apparatus

7.1 *Specimen Preparation*

7.1.1 *Lapping Facilities* — To permit the lapping of a wafer so that the thickness varies by no more than ±1% from its value at the center.

7.1.2 *Ultrasonic Cleaner* — Of suitable frequency (18 kHz to 45 kHz) and adequate power.

7.1.3 *Chemical Laboratory Apparatus* — Such as plastic beakers, graduates, and plastic-coated tweezers suitable for use both with acids (including hydrofluoric) and with solvents. Adequate facilities for handling and disposing of acids and their vapors are essential.

7.2 *Measurement of Specimen Geometry*

7.2.1 *Thickness* — Calibrated mechanical or electronic thickness gage capable of measuring the wafer thickness to ±1.0% at various positions on the wafer.

7.2.2 *Diameter* — A micrometer or Vernier caliper.

7.3 *Probe Assembly*

7.3.1 *Probe Pins* — With conical tungsten carbide probe tips with included angle of 45° to 150°. The nominal radius of a probe tip should be initially 25 µm to 50 µm.

7.3.2 *Probe Force* — The force on each probe shall be 1.75 N ± 0.25 N when the probe pins are against the specimen in measurement position.

7.3.3 *Insulation* — For measurement of specimens with resistivity up to approximately 100 Ω·cm, the electrical isolation between a probe pin (with its associated spring and external lead) and any other probe pin or part of the probe head shall be at least 100 MΩ. For measurement of specimens with higher resistivity, the electrical isolation in ohms should be at least a factor of 10^6 times the specimen resistivity in Ω·cm.

7.3.4 *Probe Alignment and Separation* — The four-probe tips shall be in an equally spaced linear array. The probe-tip spacing shall have a nominal value of 1.59 mm (0.0625 in.). Probe-tip spacing shall be determined in accordance with the procedure of ¶ 11.1 in order to establish the suitability of the probe head. The following apparatus is required for this determination:

[4] ASTM International, 100 Barr Harbor Drive, West Conshohocken, PA 19428-2959, USA; Telephone: +1.610.832.9585, Fax: +1.610.832.9555, http://www.astm.org. ASTM trademark is owned by ASTM International.

Documents
Document Sharing Hub

Full document details: SEMI MF84-0312-1023R

7.3.4.1 Silicon surface such as that of a wafer or block that can be conveniently placed under the probe head. The surface must be polished and have a flatness characteristic of semiconductor wafers used in transistor or IC fabrication.

7.3.4.2 Micrometer movement capable of moving the probe head or silicon surface in increments of 0.05 mm to 0.10 mm (0.002 in. to 0.004 in.) in a direction perpendicular to a line through the probe tips and parallel to the plane of the surface.

7.3.4.3 Toolmaker's microscope capable of measuring increments of 2.5 µm.

7.3.4.4 Microscope capable of a magnification of at least 400×.

7.4 *Specimen and Probe Head Supports*

7.4.1 *Specimen Support* — A copper block with diameter at least the larger of 100 mm (4 in.) or the nominal diameter of the specimen and at least 38 mm (1.5 in.) thick shall be used to support the specimen and provide a heat sink. It shall contain a hole to accommodate a thermometer (refer to ¶ 7.5) in such a manner that the center of the bulk of the thermometer shall be not more than 10 mm (0.4 in.) below the central area of the heat sink where the specimen is placed. A layer of mica 12 µm to 25 µm thick shall be placed on top of the heat sink to provide electrical isolation between the specimen and heat sink (refer to Figure 2). Mineral oil or silicone heat sink compound shall be used between the mica layer and copper block to reduce the thermal resistance. The heat sink shall be arranged so that the center of the probe tip array can be placed within 0.25 mm (0.010 in.) of the center of the specimen (refer to Note 2). The heat sink shall be connected to the ground point of the electrical measuring apparatus (refer to ¶ 7.6).

NOTE 2: Shallow rings, concentric with the center of the copper block, may be machined into the heat sink in order to assist in rapid centering of wafers.

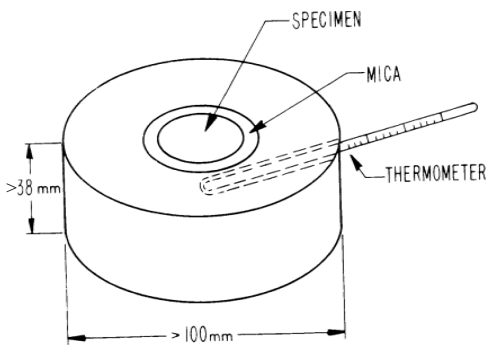

Figure 2
Heat Sink with Specimen, Mica Insulator, and Thermometer

7.4.2 *Probe Head* — The probe head shall allow the probe pins to be lowered onto the surface of the specimen with negligible lateral movement of the probe tips (refer to ¶ 11.1.3.4).

7.5 *Thermometer* — ASTM Precision Thermometer covering a range from −8°C to 32°C and conforming to the requirements for Thermometer S63C as prescribed in ASTM E2251. The thermometer hole shall be filled with mineral oil or silicone heat sink compound to provide good thermal contact between heat sink and thermometer.

Documents
Document Sharing Hub
Full document details: SEMI MF84-0312-1023R

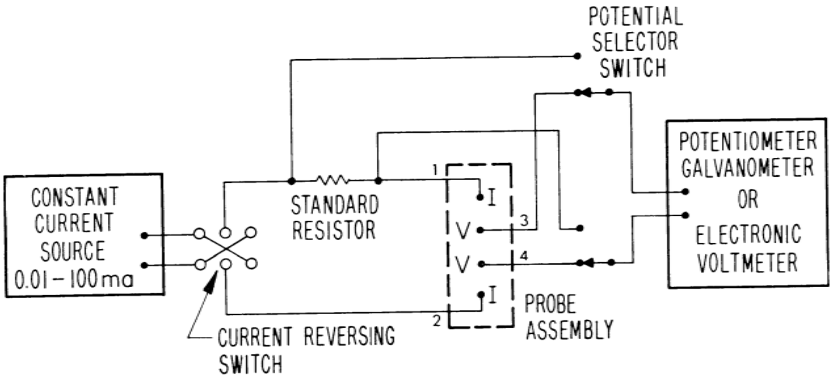

Figure 3
Recommended Electrical Circuit

7.6 *Electrical Measuring Apparatus*

7.6.1 Any circuit that meets the requirements of ¶ 11.2 may be used to make the electrical measurements. The recommended circuit, connected as shown in Figure 3, consists of the following:

7.6.1.1 *Constant-Current Source* — The value of current to be used depends on specimen resistivity and thickness. The current supply must have a compliance of at least 10 V, have ripple and noise no more than 0.1% of the DC current level being used, and must be stable to at least 0.05% during the time required for measurement of a specimen. Currents between about 0.1 µA and 100 mA are necessary to cover the resistivity range from about 0.005 Ω·cm to 10,000 Ω·cm with equivalent precision at the specimen voltage level recommended in ¶ 12.4, assuming a specimen thickness of 0.5 mm (0.020 in.). Recommended current values intended to achieve 10 mV of specimen voltage between pins 2 and 3 with specimen thickness of 0.5 mm (0.020 in.) are given in Table 1.

Table 1 Recommended Nominal Measurement Current Values

Resistivity (Ω·cm)	*Current*
<0.03	100 mA
0.03–0.3	25 mA
0.3–3	2.5 mA
3–30	250 µA
30–300	25 µA
300–3000	2.5 µA
>3000	0.25 µA

NOTE 3: For specimens of lower resistivity, it is advisable not to use currents significantly above 100 mA due to the risk of joule heating at the current probe tips (refer to ¶ 3.3.7). Rather, to maintain equivalent measurement precision at resistivities below about 0.05 Ω·cm it is advisable to use a voltmeter of higher sensitivity and resolution (refer to ¶ 7.6.1.5).

NOTE 4: A smaller range of current values can be used to cover the full range of specimen resistivity and thickness values in the scope of this method without loss at measurement precision if the electronic voltmeter exceeds the minimum resolution requirements of ¶ 7.6.1.5.

7.6.1.2 *Current-Reversing Switch*

7.6.1.3 *Standard Resistor* — The resistance of the standard resistor shall be selected so that it is within a factor of 10 of that of the specimen to be measured. Recommended values of resistance for various resistivity ranges are listed in Table 2. The values must be known to ±0.05%. These values also apply to the resistor *r* in the analog test circuit shown in Figure 1 (refer to ¶¶ 3.4 and 6.2).

Documents
Document Sharing Hub
Full document details: SEMI MF84-0312-1023R