SEMI MF978-1106 (Reapproved 1111)
TEST METHOD FOR CHARACTERIZING SEMICONDUCTOR DEEP LEVELS BY TRANSIENT CAPACITANCE TECHNIQUES

This Standard was technically approved by the global Gases Technical Committee. This edition was approved for publication by the global Audits and Reviews Subcommittee on September 12, 2011. Available at www.semiviews.org and www.semi.org in November 2011; originally published by ASTM International as ASTM F978; previously published November 2006.

NOTICE: This Document was reapproved with minor editorial changes.

1 Purpose

1.1 Deep-level defect measurement techniques such as isothermal transient capacitance (ITCAP)[1,2] and DLTS[3] utilize the ability of electrically active defects to trap free carriers and to re-emit them by thermal emission. Theoretically, the emission rate e_n for electrons is given by the following equation:

$$e_n = \sigma_n v_f N_c \exp(-\Delta G / kT) \tag{1}$$

where:

σ_n = capture cross section of the defect for an electron,

v_t = thermal velocity of the electron,

N_c = density-of-states in the conduction band,

ΔG = Gibbs free energy (a function of temperature) of the defect,

k = Boltzmann constant, and

T = absolute temperature.

1.2 A form commonly used for emission rate,

$$e_n = BT^2 \exp(-\Delta E / kT), \tag{2}$$

where B is assumed to be independent of temperature, is obtained by using $\Delta G = \Delta E - T\Delta S$, where ΔE is the activation energy (to be more exact, the enthalpy, which is the energy of the trap below the conduction band) and ΔS is the change in entropy.[4] For the equivalence of BT^2 to $\sigma_n v_t N_c \exp(\Delta S/k)$, one assumes σ_n and ΔS to have no dependence on temperature, a $T^{1/2}$ dependence for v_t, and a $T^{3/2}$ dependence for N_c. For ΔG to equal ΔE, $\Delta S = 0$ (that is, no change between the initial and final state degeneracy or lattice relaxation associated with the transition).

1.3 An analogous expression can be written for the hole emission rate. Analysis of the measured thermal emission rate in the depletion layer of a test device as a function of temperature leads to activation energies and effective capture cross sections of the defects present. The magnitude of the capacitance changes associated with the emission can be related to the densities of the defects present. The interest in measurement of deep levels in semiconductors stems from the following two related aspects:

1.3.1 Detection, identification, and control of unwanted native or process-induced impurities or defects; and

1.3.2 Characterization and control of impurities specifically introduced for lifetime or other parameter control.

---

[1] Phillips, W. E., and Buehler, M. G., In Semiconductor Measurement Technology: Progress Report, July 1 to September 30, 1976, edited by W. M. Bullis and J. F. Mayo-Wells, NBS Special Publication 400-36 (1978), pp. 20–22.

[2] Phillips, W. E., and Lowney, J. R., "Analysis of Nonexponential Transient Capacitance in Silicon Diodes Heavily Doped with Platinum," *J. Appl. Phys.* **54**, 2786–2791 (1983).

[3] Lang, D. V., "Deep-Level Transient Spectroscopy: A New Method to Characterize Traps in Semiconductors," *J. Appl. Phys.* **45**, 3023–3032 (1974).

[4] Engstrom, O., and Alm, Anders, "Thermodynamical Analysis of Optimal Recombination Centers in Thyristors," *Solid-State Electron.* **21**, 1571–1576 (1978).

Documents Document Sharing Hub

Full document details: SEMI MF978-1106-1111R

2 Scope

2.1 This Test Method covers three procedures for determining the density, activation energy, and prefactor of the exponential expression for the emission rate of deep-level defect centers in semiconductor depletion regions by transient-capacitance techniques.

2.1.1 Procedure A is the conventional, constant voltage, deep-level transient spectroscopy (DLTS) technique in which the temperature is slowly scanned and an exponential capacitance transient is assumed.

2.1.2 Procedure B is the conventional DLTS (Procedure A) with corrections for non-exponential transients due to heavy trap doping and incomplete charging of the depletion region.

2.1.3 Procedure C is a more precise referee technique that uses a series of isothermal transient measurements and corrects for the same sources of error as Procedure B.

NOTICE: SEMI Standards and Safety Guidelines do not purport to address all safety issues associated with their use. It is the responsibility of the users of the Documents to establish appropriate safety and health practices, and determine the applicability of regulatory or other limitations prior to use.

3 Limitations

3.1 Temperature errors significantly reduce the accuracy of the energy determination. Temperature inaccuracies that vary in magnitude with temperature are even more significant.

3.2 Non-exponentiality of the capacitance transient interferes with the characterization technique. Tests for non-exponentiality are given in ¶ 11.1. Causes of non-exponentiality are as follows:

3.2.1 The density of the deep-level defects is not small compared to the net shallow dopant density. Procedures B and C correct for this interference.

3.2.2 Trap charging does not take place throughout the depletion region at moderate (or higher) levels of trap density relative to net shallow dopant density. Procedures B and C correct for this interference.

3.2.3 The onset of free carriers at the edge of the depletion region is not sufficiently abrupt (i.e., the approximation of complete depletion is not valid). Procedures B and C help correct for this.

3.2.4 The emission rate varies with electric field intensity (e.g., Poole-Frankel effect).

3.2.5 The observed emission is the sum of emissions from two or more closely spaced and unresolved defect centers.

3.2.6 The response time of the capacitance meter, the recording system, or the test specimen (high resistance) is not negligible compared to the transient time constant.

3.3 Temperature dependencies of the capture cross section and the entropy change will introduce error in the proposed analysis.

4 Referenced Standards and Documents

4.1 *SEMI Standards and Safety Guidelines*

SEMI M59 — Terminology for Silicon Technology

SEMI MF1392 — Test Method for Determining Net Carrier Density Profiles in Silicon Wafers by Capacitance-Voltage Measurements with a Mercury Probe

4.2 *ANSI Standards*[5]

ANSI/ASQ Z1.4 — Sampling Procedures and Tables for Inspection by Attributes

[5] American National Standards Institute, 25 West 43rd Street, New York, NY 10036, USA; Telephone: 212.642.4900, Fax: 212.398.0023, http://www.ansi.org

Documents
Document Sharing Hub
Full document details: SEMI MF978-1106-1111R

4.3 *ASTM Standards*[6]

ASTM E177 — Standard Practice for Use of the Terms Precision and Bias in ASTM Test Methods

ASTM E178 — Standard Practice for Dealing with Outlying Observations

NOTICE: Unless otherwise indicated, all documents cited shall be the latest published versions.

5 Terminology

5.1 Terms relating to silicon and other semiconductor technology are defined in SEMI M59.

6 Summary of Test Method

6.1 In this method procedures are given for determining the density, activation energy, and the prefactor of the exponential expression for the emission rate of deep-level defect centers.

6.1.1 In Procedure A (see Figure 1), the temperature of the diode is slowly scanned while the bias voltage is repetitively changed. The high-frequency capacitance transient due to trap emission is sampled at two successively delayed gate times. The average difference between these sampled values constitutes the signal that has a maximum or peak at a temperature that is a function of the gate times. The time constant associated with the peak response is fixed by the rate window of the boxcar averager used to sample the transient or by computer simulation of such an instrument.

6.1.2 For non-exponential transients, Procedure B adds a correction to the calculation of the time constant at the temperature of the response peak.

6.1.3 In Procedure C, the temperature is held constant at each of a series of temperatures and the observed capacitance transient is analyzed for its corrected time constant. An Arrhenius-type semi-logarithmic plot of normalized emission rate versus reciprocal temperature is made in each procedure, and the activation energy and prefactor are calculated from the slope and intercept, respectively. The density of the defects is determined from the magnitude of the capacitance changes.

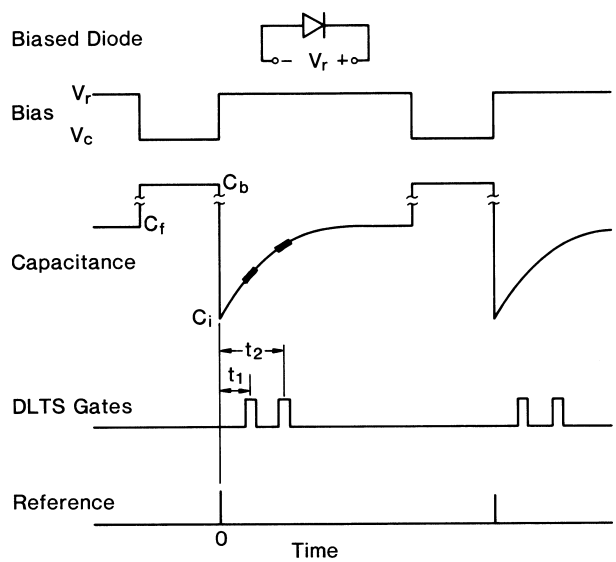

Figure 1
Schematic of Biased n^+p Diode and Waveforms Associated with Repetitively Changing the Bias and Analyzing the Resulting Capacitance Transient

[6] American Society for Testing and Materials, 100 Barr Harbor Drive, West Conshohocken, PA 19428-2959, USA; Telephone: 610.832.9585, Fax: 610.832.9555, http://www.astm.org

Documents Document Sharing Hub
Full document details: SEMI MF978-1106-1111R

6.2 The use of a boxcar averager is assumed in the discussion of Procedures A and B. However, a lock-in amplifier may also be used for these procedures, provided that factors that may degrade the results are taken into account. Constant-capacitance versions of these procedures are not discussed but are, of course, suitable for the purposes considered here. The nonexponential corrections covered in this test method are in general not needed for constant-capacitance measurements as the method itself eliminates most of the nonexponentiality.

7 Apparatus

7.1 *Capacitance Bridge or Meter* — Using a high-frequency test signal and capable of measuring from 1 to 100 pF full scale with an accuracy as defined in ASTM E177 of ±0.5% (1S%). Its response time should be much less than the smallest time constant to be measured. The instrument shall be capable of sustaining external dc bias of about ±50 V and have offset provisions for compensating or nulling out the external capacitance of the specimen holder, connecting cables, steady-state capacitance, etc. A provision for blocking out the large capacitance during the fill pulse is desirable. The capacitance measurement system used for determining the DLTS peaks in Procedures A and B does not need to be direct reading but must have an output that is sufficiently linear and a response time that is sufficiently fast to give undistorted peaks.

7.2 *Standard Capacitances* — Of accuracy 0.25% or better (1S%) at the measurement frequency. One capacitor shall be in the range from 1 to 10 pF and another in the range from 10 to 100 pF.

7.3 *Pulser* — With controllable repetition rate capable of changing from one bias voltage adjustable within the range of at least +10 to −10 V to another bias voltage in the same range. Switching time shall be much less than the smallest time constant to be measured and overshoot and undershoot shall be less than 1% of pulse amplitude under operating conditions.

7.4 *Boxcar Averager* — Or equivalent instrument (needed for Procedures A and B only) to process the capacitance transient. Desirable features are two separately controllable gate delay times with adjustable sampling time.

7.5 *Interval Timer* — (needed for Procedures A and B only) capable of measuring gate delay times of a few microseconds to several seconds with an accuracy of 0.1% (1S%).

7.6 *Recorder System* — Capable of digitally or continuously measuring and recording the following:

7.6.1 Capacitance as a function of time or temperature, or

7.6.2 The average difference in capacitance at two gate delay times as a function of temperature.

7.7 *Oscilloscope* — Capable of observing the pulser output, the capacitance transient, and boxcar or other output to be recorded (not required but extremely helpful).

7.8 *Cryostat* — Containing a specimen holder capable of maintaining a selectable temperature or of ramping the temperature up or down at a controlled rate. For silicon, the temperature range is usually between cryogenic and room temperature, and for gallium arsenide, the range is from cryogenic or room temperature to higher temperatures depending upon the energy levels of interest. In Procedure C, a radiation shield surrounding the specimen holder is necessary to attain temperature accuracy of 0.1 K at temperatures much below or much above room temperature.

7.9 *Thermometry System* — Capable of determining the diode temperature with a precision of 0.1 K and an accuracy of 0.5 K for Procedures A and B and a precision of 0.02 K and an accuracy of 0.1 K for Procedure C.

8 Sampling

8.1 These procedures are nondestructive and are suitable for use on 100% inspection. If a sampling basis is employed, the method of sampling shall be agreed upon by the parties to the test and shall be in accordance with acceptable statistical procedures (see ANSI/ASQ Z1.4).

9 Test Specimen

9.1 The procedures of this test method require that the deep levels to be characterized shall be in a depletable region of a semiconductor such as in a *p-n* junction diode or a Schottky diode. It is desirable to use a peripheral guard ring suitably biased to isolate the depletion region of the device from surface states (see ¶ 11.2.1).

Documents
Document Sharing Hub
Full document details: SEMI MF978-1106-1111R

10 Calibration and Standardization

10.1 Measure the standard capacitances to determine that the capacitance bridge or meter is within specifications.

10.2 Verify time calibration by use of a calibrated time-mark generator or an interval timer for the recorder system. (For Procedure C only.)

10.3 Verify temperature calibration. Comparison with a calibrated platinum resistance thermometer under isothermal conditions is preferred. An alternative check is to use a well-characterized diode, lightly doped with platinum or another deep level (ΔE and B known), measure the emission rate $e_n = 1/\tau$, and calculate iteratively:

$$T = \frac{11604.5\,\Delta E}{\ln\tau + 2\ln T + \ln B}. \tag{3}$$

11 Procedure

11.1 *Tests for Non-exponentiality of the Capacitance Transients* — Use one or more of the following techniques:

11.1.1 *Thurber et al. Technique*[7]

11.1.1.1 Choose a convenient value of rate window τ^{-1}, for example $(500\ \mu s)^{-1}$, and choose a sequence of values of t_2/t_1, for example, 2, 5, 10, 20, 50. Calculate for each value of t_2/t_1 as follows:

$$t_1 = \tau\frac{\ln(t_2/t_1)}{(t_2/t_1)-1} \tag{4}$$

and

$$t_2 = t_1(t_2/t_1). \tag{5}$$

11.1.1.2 Perform ¶¶ 11.2.1 and 11.2.2 of Procedure A using the gate times t_1 and t_2 calculated here. Compare values of T_m from each run. If T_m is constant, the transient is exponential and the corrections of Procedure B are not needed; consequently follow Procedure A. If T_m changes with changes in the t_2/t_1 ratio, apply corrections by following Procedure B or use Procedure C.

11.1.2 *Manglesdorf Test*[8]

11.1.2.1 For a single capacitance transient, recorded at constant temperature, plot capacitance at time t against capacitance at a delayed time $t + \Delta t$ for several Δt values ranging from about 0.5τ to a few τ. Calculate the slope m of the linear regression line fitted to the data points as follows:

$$m = \frac{nZ_1 - X_1Y_1}{nX_2 - X_1^2}. \tag{6}$$

where:

n = number of points,

$X_1 = \Sigma C(t)$,

$X_2 = \Sigma[C(t)]^2$,

$Y_1 = \Sigma C(t + \Delta t)$, and

$Z_1 = \Sigma[C(t)\cdot C(t + \Delta t)]$.

11.1.2.2 Calculate $\tau = -\Delta t/\ln(m)$. If τ does not change as Δt is changed, the transient is exponential and any of the procedures can be used. If τ changes as Δt is changed, Procedure B or C must be used.

[7] Thurber, W. R., Forman, R. A., and Phillips, W. E. "A Novel Method to Detect Nonexponential Transients in Deep Level Transient Spectroscopy." *J. Appl. Phys.* **53** (1982): pp. 7397–7400.

[8] Mangelsdorf, P. C., Jr. "Convenient Plot for Exponential Functions with Unknown Asymptotes." *J. Appl. Phys.* **30** (1959): p. 442.

Documents Document Sharing Hub

Full document details: SEMI MF978-1106-1111R