SEMI MS2-0212
TEST METHOD FOR STEP-HEIGHT MEASUREMENTS OF THIN FILMS

This Standard was technically approved by the global MEMS/NEMS Technical Committee. This edition was approved for publication by the global Audits and Reviews Subcommittee on December 24, 2011. Available at www.semiviews.org and www.semi.org in February 2012; originally published March 2007; previously published November 2009.

1 Purpose

1.1 This Test Method enables the determination of step height measurements of thin films. Step height measurements can be used to determine thin film thickness values. Thickness measurements[1] are an aid in the design and fabrication of MEMS devices and can be used to obtain thin film material parameters, such as Young's modulus.[2]

2 Scope

2.1 This Test Method presents a procedure for measuring step heights of thin films using step height test structures. It applies only to films, such as those found in microelectromechanical system (MEMS) materials, which can be accurately imaged using an optical interferometer (also called an interferometric microscope) or comparable instrument with the capability of obtaining topographical 2-D data traces.

NOTICE: SEMI Standards and Safety Guidelines do not purport to address all safety issues associated with their use. It is the responsibility of the users of the Documents to establish appropriate safety and health practices, and determine the applicability of regulatory or other limitations prior to use.

3 Limitations

3.1 For optical interferometry, all platforms involved in step height measurements must be reflective.

NOTE 1: If in doubt as to whether or not the platforms are sufficiently reflective, approximately 8 nm of chromium followed by approximately 150 nm of gold can be deposited on the top surface. The chromium serves as an adhesion layer for the gold while the gold coverage provides a smooth, reflective surface enabling accurate interferometric measurements. These additional layers are assumed to have a uniform thickness across the chip and, as such, do not enter into the calculations. This post-processing is considered outside the scope of this Test Method.

4 Referenced Standards and Documents

4.1 *SEMI Standards and Safety Guidelines*

SEMI MS4 — Test Method for Young's Modulus Measurements of Thin, Reflecting Films Based on the Frequency of Beams in Resonance

4.2 *ASTM Standards*[3]

ASTM E2244 — Standard Test Method for In-Plane Length Measurements of Thin, Reflecting Films Using an Optical Interferometer

---

[1] Marshall, J. C., and Vernier, P. T. "Electro-Physical Technique for Post-Fabrication Measurements of CMOS Process Layer Thicknesses." *NIST J. Res*., Vol. 112, No. 5 (2007): pp. 223–56.

Gupta, R. K., Osterberg, P. M., and Senturia, S. D. "Material Property Measurements of Micromechanical Polysilicon Beams." *Microlithography and Metrology in Micromachining II*, SPIE, Vol 2880 (October 14-15, 1996): pp. 39–45.

Jensen, B. D., de Boer, M. P., Masters, N. D., Bitsie, F., and LaVan, D. A. "Interferometry of Actuated Microcantilevers to Determine Material Properties and Test Structure Nonidealities in MEMS," *Journal of Microelectromechanical Systems*, Vol 10 (September 2001): pp. 336–46.

Marshall, J. C. "New Optomechanical Technique for Measuring Layer Thickness in MEMS Processes." *Journal of Microelectromechanical Systems*, Vol 10 (March 2001): pp. 153–57.

[2] Marshall, J. C., Herman, D. L., Vernier, P. T., DeVoe, D. L., and Gaitan, M. "Young's Modulus Measurements in Standard IC CMOS Processes using MEMS Test Structures." *IEEE Electron Device Letters*, Vol. 28, No. 11 (2007): pp. 960–63.

[3] American Society for Testing and Materials, 100 Barr Harbor Drive, West Conshohocken, PA 19428-2959, USA; Telephone: 610.832.9585, Fax: 610.832.9555, http://www.astm.org

SUPERSEDED
Documents Document Sharing Hub
Full document details: SEMI MS2-0212

ASTM E2245 — Standard Test Method for Residual Strain Measurements of Thin, Reflecting Films Using an Optical Interferometer

ASTM E2246 — Standard Test Method for Strain Gradient Measurements of Thin, Reflecting Films Using an Optical Interferometer

ASTM E2444 — Standard Terminology Relating to Measurements Taken on Thin, Reflecting Films

ASTM E2530 — Standard Practice for Calibrating the Z-Magnification of an Atomic Force Microscope at Subnanometer Displacement Levels Using Si (111) Monatomic Steps

NOTICE: Unless otherwise indicated, all documents cited shall be the latest published versions.

5 Terminology

5.1 *Abbreviations and Acronyms*

5.1.1 *CMOS* — complementary metal oxide semiconductor

5.1.2 *FOV* — field of view

5.1.3 *MEMS* — microelectromechanical systems

5.2 *Definitions*

NOTE 2: Some of the following terms and definitions are similar to those found in ASTM E2444.

5.2.1 *2-D data trace* — a two-dimensional group of points that is parallel to the *xz*- or *yz*-plane of the instrument.

NOTE 3: For many instruments, the 2-D data trace is extracted from a 3-D data set.

5.2.2 *3-D data set* — a three-dimensional group of points with a topographical *z*-value for each (*x*, *y*) pixel location within the field of view of the instrument.

5.2.3 *bulk micromachining* — a MEMS fabrication process that removes the substrate at specified locations.

5.2.4 *interferometer* — a noncontact optical instrument used to obtain topographical data (such as 3-D data sets and 2-D data traces).

NOTE 4: The *z*-axis of the interferometer is used to measure the height of the sample. The *x*-axis is typically aligned parallel or perpendicular to the measured transitional edges.

5.2.5 *microelectromechanical systems* — a term used to describe micron-scale structures, sensors, actuators, and technologies used for their manufacture (such as, silicon process technologies), or combinations thereof.

5.2.6 *physical step height standard* — the artifact used to calibrate the optical interferometric microscope or comparable instrument in the out-of-plane *z*-direction.

5.2.7 *platform height* — the distance in the *z*-direction that a flat, processed surface of interest is from a designated flat, processed reference surface.

5.2.8 *reference platform* — the flat, processed surface that is used to level and zero the measurements in the *z*-direction.

5.2.9 *sacrificial layer* — to allow freestanding microstructures, a single thickness of material that is intentionally deposited (or added) then removed (in whole or in part) during the micromachining process.

5.2.10 *step height* — the distance in the *z*-direction that an initial, flat, processed surface (or platform) is to a final, flat, processed surface (or platform).

NOTE 5: It is recommended that the two platforms of interest be designed adjacent to each other.

5.2.11 *step height test structure* — a test structure from which step height measurements are obtained.

5.2.12 *substrate* — in a fabrication process, the thick, starting material (often single crystal silicon or glass) that can be used to build MEMS devices.

5.2.13 *surface micromachining* — a MEMS fabrication process where components are formed on a substrate by the deposition (or addition) and removal (in whole or in part) of structural and sacrificial layers.

SUPERSEDED

Documents
Document Sharing Hub
Full document details: SEMI MS2-0212

5.2.14 *test structure* — a fabricated component (such as, a fixed-fixed beam or cantilever) that is used to extract information (such as, the residual strain or the strain gradient of a layer) about the fabrication process.

5.2.15 *thickness* — the height in the *z*-direction of one or more designated thin film layers.

5.2.16 *transitional edge* — the side of a MEMS structure that is characterized by a distinctive out-of-plane vertical displacement as seen in a 2-D data trace.

5.2.17 *Young's modulus* — a parameter indicative of material stiffness that is equal to the stress divided by the strain when the material is loaded in uniaxial tension, assuming the strain is small enough such that it does not irreversibly deform the material.

NOTE 6: It is also called the elastic modulus, the modulus of elasticity, and the tensile modulus.

5.3 *Symbols*

5.3.1 *For Calibration*

5.3.1.1 σ_{6ave} — the maximum of two uncalibrated values (σ_{before} and σ_{after}) where σ_{before} is the standard deviation of the six step height measurements taken along the physical step height standard before the data session and σ_{after} is the standard deviation of the six measurements taken along the physical step height standard after the data session.

5.3.1.2 σ_{6same} — the maximum of two uncalibrated values (σ_{same1} and σ_{same2}) where σ_{same1} is the standard deviation of the six step height measurements taken at the same location on the physical step height standard before the data session and σ_{same2} is the standard deviation of the six measurements taken at this same location after the data session.

5.3.1.3 σ_{cert} — the one sigma uncertainty of the physical step height standard used for calibration.

5.3.1.4 $\sigma_{repeat(samp)}$ — the relative step height repeatability standard deviation as obtained from step height test structures fabricated in a process similar to that used to fabricate the sample.

5.3.1.5 cal_z — the *z*-calibration factor of the interferometric microscope or comparable instrument.

5.3.1.6 *cert* — the certified value of the physical step height standard used for calibration.

5.3.1.7 z_{drift} — the uncalibrated positive difference between the average of the six calibration measurements taken before the data session (at the same location on the physical step height standard) and the average of the six calibration measurements taken after the data session (at this same location).

5.3.1.8 z_{lin} — over the instrument's total scan range, the maximum relative deviation from linearity (typically less than 3 %), as quoted by the instrument manufacturer.

5.3.1.9 $\bar{z}_{6ave}$ — the uncalibrated average of the six calibration measurements from which σ_{6ave} is found.

5.3.1.10 $\bar{z}_{6same}$ — the uncalibrated average of the six calibration measurements used to determine σ_{6same}.

5.3.1.11 $\bar{z}_{ave}$ — the average of the twelve calibration measurements (taken along the physical step height standard before and after the data session) used to calculate cal_z.

5.3.2 *For Step Height Measurements and Calculations*

5.3.2.1 *platNrD* — the calibrated average of the reference platform height measurements taken from multiple data traces on one step height test structure, where *N* is the test structure number (*1*, *2*, *3*, etc.), *r* indicates it is from a reference platform, and *D* directionally indicates which reference platform (using the compass indicators *N*, *S*, *E*, or *W* where *N* refers to the reference platform designed closest to the top of the chip).

5.3.2.2 *platNrDt* — an uncalibrated reference platform height measurement from one data trace, where *N* is the test structure number (*1*, *2*, *3*, etc.), *r* indicates it is from a reference platform, *D* directionally indicates which reference platform (using the compass indicators *N*, *S*, *E*, or *W* where *N* refers to the reference platform designed closest to the top of the chip), and *t* is the data trace (*a*, *b*, *c*, etc.) being examined.

SUPERSEDED

Documents Document Sharing Hub
Full document details: SEMI MS2-0212

5.3.2.3 *platNX* — the calibrated platform height measurement, where *N* is the test structure number (*1*, *2*, *3*, etc.) and *X* is the capital letter (or *r* is used if it is the reference platform) associated with the platform (*A*, *B*, *C*, etc.) as lettered starting with *A* for the platform closest to *platNrW* or *platNrS*.

5.3.2.4 *platNXt* — an uncalibrated platform height measurement from one data trace, where *N* is the test structure number (*1*, *2*, *3*, etc.), *X* is the capital letter associated with the platform (*A*, *B*, *C*, etc.) as lettered starting with *A* for the platform closest to *platNrW* or *platNrS*, and *t* is the data trace (*a*, *b*, *c*, etc.) being examined.

5.3.2.5 $s_{platNrDt}$ — the uncalibrated standard deviation of the data from Trace *t* on *platNrD*.

5.3.2.6 $s_{platNXave}$ — the average of the calibrated standard deviation values from the data traces on *platNX*.

5.3.2.7 $s_{platNXt}$ — the uncalibrated standard deviation of the data from Trace *t* on *platNX*.

5.3.2.8 $s_{platNYt}$ — the uncalibrated standard deviation of the data from Trace *t* on *platNY*.

5.3.2.9 $s_{roughNX}$ — the uncalibrated surface roughness of *platNX* measured as the smallest of all the values obtained for $s_{platNXt}$; however, if the surfaces of the platforms (including the reference platform) all have identical compositions, then it is measured as the smallest of all the standard deviation values obtained from data traces *a*, *b*, and *c* along these platforms.

5.3.2.10 $s_{roughNY}$ — the uncalibrated surface roughness of *platNY* measured as the smallest of all the values obtained for $s_{platNYt}$; however, if the surfaces of the platforms (including the reference platform) all have identical compositions, then it is measured as the smallest of all the standard deviation values obtained from data traces *a*, *b*, and *c* along these platforms.

5.3.2.11 $stepN_XM_Y$ — the calibrated step height measurement taken from two different step height test structures (*N* and *M*) on the same test chip, which is equal to the final platform height minus the initial platform height, where the step is from the initial platform to the final platform and where *X* is the capital letter associated with the initial platform from test structure number *N*, and *Y* is the capital letter associated with the final platform from test structure number *M*.

5.3.2.12 $stepN_{XY}$ — the average of the calibrated step height measurements taken from multiple data traces on one step height test structure, where *N* is the number associated with the test structure, *X* is the capital letter associated with the initial platform (or *r* is used if it is the reference platform), *Y* is the capital letter associated with the final platform (or *r* is used if it is the reference platform), and the step is from the initial platform to the final platform.

5.3.2.13 $stepN_{XYt}$ — a calibrated step height measurement from one data trace on one step height test structure, where *N* is the number associated with the test structure, *X* is the capital letter associated with the initial platform (or *r* is used if it is the reference platform), *Y* is the capital letter associated with the final platform (or *r* is used if it is the reference platform), *t* is the data trace (*a*, *b*, *c*, etc.) being examined, and the step is from the initial platform to the final platform.

5.3.3 *For Combined Standard Uncertainty Calculations*

5.3.3.1 u_{cal} — the component in the combined standard uncertainty calculation for step height measurements that is due to the uncertainty of the measurements taken across the physical step height standard.

5.3.3.2 u_{cert} — the component in the combined standard uncertainty calculation for step height measurements that is due to the uncertainty of the value of the physical step height standard used for calibration.

5.3.3.3 u_{cSH} — the combined standard uncertainty of a step height measurement.

5.3.3.4 u_{drift} — the component in the combined standard uncertainty calculation for step height measurements that is due to the amount of drift during the data session.

5.3.3.5 $u_{LplatNX}$ — the component in the combined standard uncertainty calculation for platform height measurements that is due to the measurement uncertainty across the length of *platNX*, where the length is measured perpendicular to the edge of the step.

SUPERSEDED

Documents
Document Sharing Hub
Full document details: SEMI MS2-0212

5.3.3.6 u_{Lstep} — the component in the combined standard uncertainty calculation for step height measurements that is due to the measurement uncertainty of the step height across the length of the step, where the length is measured perpendicular to the edge of the step.

5.3.3.7 u_{linear} — the component in the combined standard uncertainty calculation for step height measurements that is due to the deviation from linearity of the data scan.

5.3.3.8 u_{platNX} — the component in the combined standard uncertainty calculation for step height measurements obtained from two step height test structures that is due to the uncertainty of the platform height measurement for *platNX*.

5.3.3.9 $u_{repeat(samp)}$ — the component in the combined standard uncertainty calculation for step height measurements that is due to the repeatability of measurements taken on step height test structures processed similarly to the one being measured.

5.3.3.10 $u_{repeat(shs)}$ — the component in the combined standard uncertainty calculation for step height measurements that is due to the repeatability of measurements taken on the physical step height standard.

5.3.3.11 U_{SH} — the expanded uncertainty of a step height measurement.

5.3.3.12 $u_{WplatNX}$ — the component in the combined standard uncertainty calculation for platform height measurements that is due to the measurement uncertainty across the width of *platNX*, where the width is measured parallel to the edge of the ste*p*.

5.3.3.13 u_{Wstep} — the component in the combined standard uncertainty calculation for step height measurements that is due to the measurement uncertainty of the step height across the width of the step, where the width is measured parallel to the edge of the step.

6 Summary of Method

NOTE 7: This Test Method is written for use with an optical interferometric microscope or comparable instrument and may not specifically pertain to all instruments. Therefore, modifications may need to be made, as appropriate, to obtain the required data.

6.1 This Test Method can be used to obtain the step height measurements $stepN_{XY}$ or $stepN_XM_Y$ from one step height test structure (recommended) or from two step height test structures on the same chip, respectively, and their combined standard uncertainty values, u_{cSH}. Sample step height test structures are shown in Figures 1 through 4. An optical interferometric microscope (a schematic of which is shown in Figure 5) or comparable instrument is used to obtain multiple 2-D data traces along the top of the test structure(s) involved in the step. An example of a 2-D data trace is shown in Figure 6. Data averages and standard deviations from the 2-D data traces along the pertinent platforms, including the reference platform(s), are recorded.

6.2 *Obtaining $stepN_{XY}$ From One Step Height Test Structure (recommended due to a resulting lower value for u_{cSH})* — For each 2-D data trace, the difference in the platform heights involved in the step is calculated. The step height, $stepN_{XY}$, is the average of these values from the different 2-D data traces. The value for u_{cSH} for this measurement is determined as given in Appendix 1 (specifically § A1-1).

6.3 *Obtaining $stepN_XM_Y$ From Two Step Height Test Structures on the Same Chip* — For each test structure, the reference platform height is calculated as the average of the reference platform height measurements taken from the 2-D data traces on that test structure. For each test structure, a platform height measurement is the average of the platform measurements from the 2-D data traces minus the just calculated reference platform height for that test structure. The step height, $stepN_XM_Y$, is the difference in height between the two platforms measured for the two test structures. (This assumes that the reference platform in each test structure is comprised of the same design layers and that the two test structures are on the same test chip.) The value for u_{cSH} for this measurement is determined as given in Appendix 1 (specifically § A1-2).

SUPERSEDED

Documents Document Sharing Hub
Full document details: SEMI MS2-0212

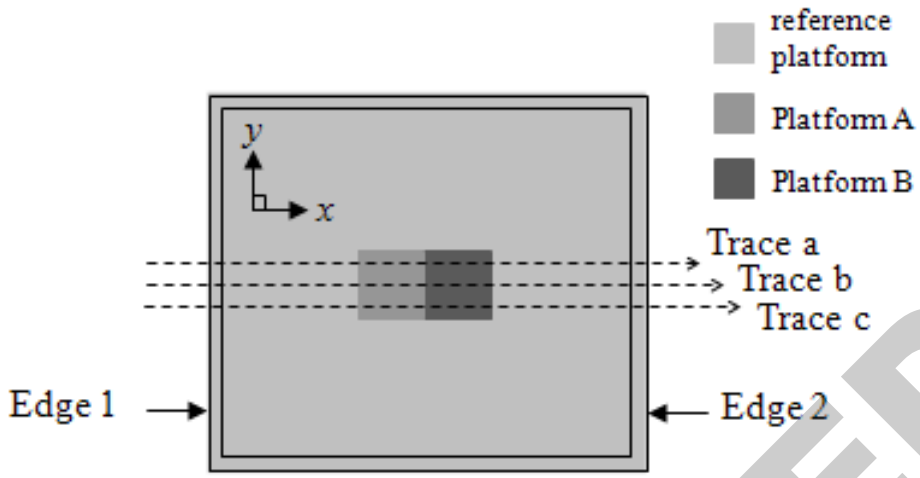

Figure 1
An Ideal Step Height Test Structure Indicating the Location of Three 2-D Data Traces

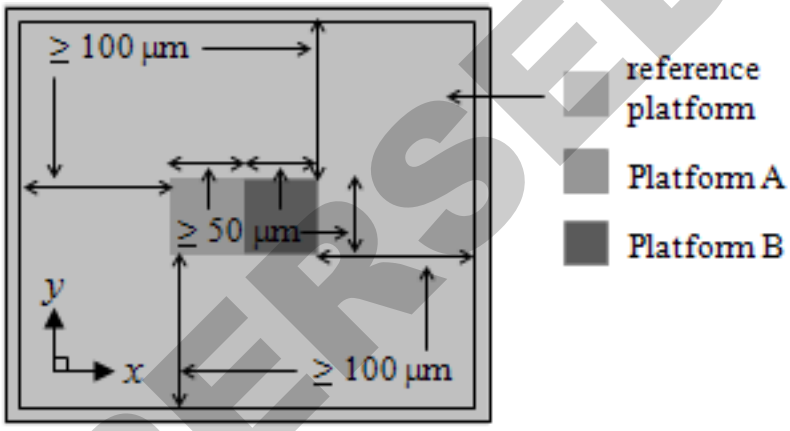

Figure 2
Dimensional Considerations for the Ideal Step Height Test Structure in Figure 1

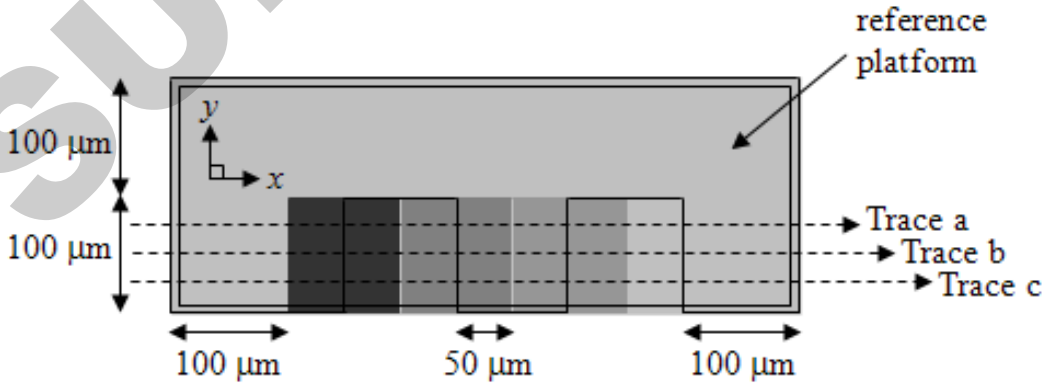

Figure 3
A Step Height Test Structure with Multiple Steps
Indicating the Location of Three 2-D Data Traces

SUPERSEDED

Documents
Document Sharing Hub
Full document details: SEMI MS2-0212

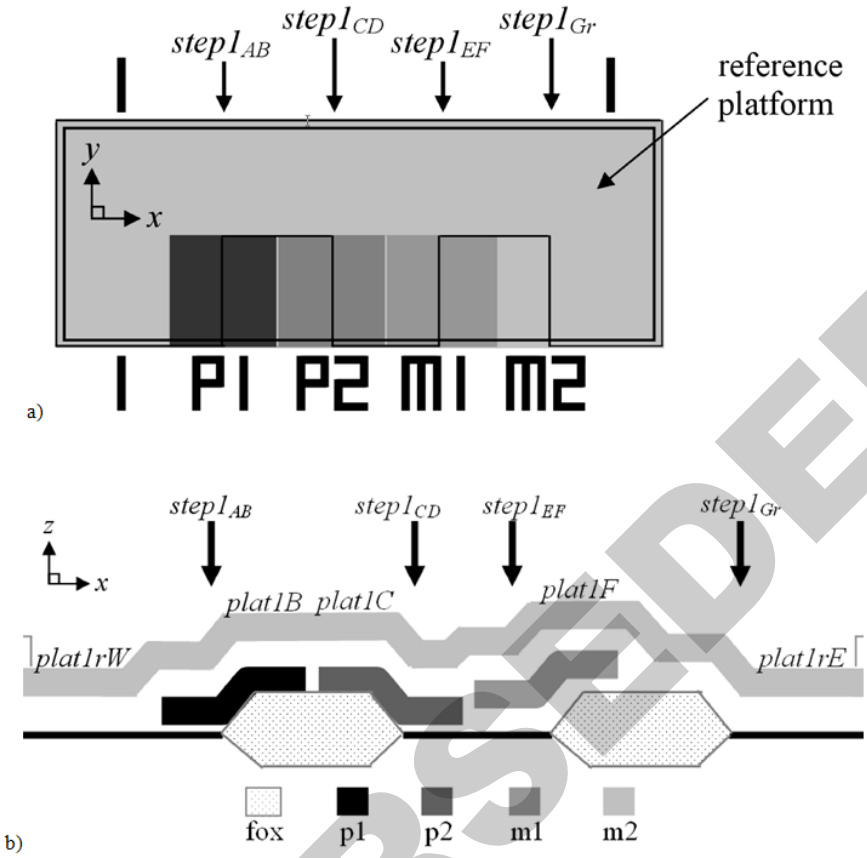

Figure 4
For Step Height Test Structure 1 in Figure 3; a) a Design Rendition and b) a Cross Section

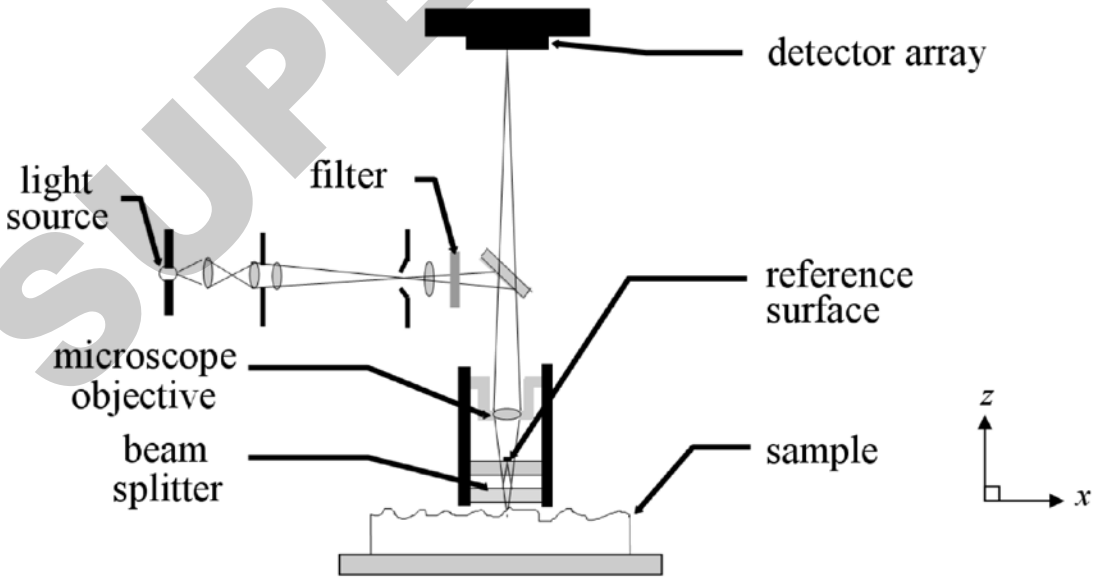

Figure 5
Schematic of an Optical Interferometric Microscope

SUPERSEDED

Documents Document Sharing Hub
Full document details: SEMI MS2-0212