SEMI MS5-0813 (Reapproved 0819)
TEST METHOD FOR WAFER BOND STRENGTH MEASUREMENTS USING MICRO-CHEVRON TEST STRUCTURES

This Standard was technically approved by the MEMS/NEMS Global Technical Committee. This edition was approved for publication by the global Audits and Reviews Subcommittee on May 7, 2019. Available at www.semiviews.org and www.semi.org in August 2019. Originally published November 2007; previously published August 2013.

NOTICE: This Document was reapproved with minor editorial changes.

1 Purpose

1.1 This Test Method enables the determination of the bond strength between two wafers using micro-chevron test structures. Wafer-wafer bonding is a mainstay for microelectromechanical system (MEMS) and three-dimensional stacked integrated circuits (3DS-IC) design and fabrication. MEMS components, such as acceleration sensors, gyroscopes, micropumps, or microvalves that are increasingly found in smart automotive and navigation control systems or in medical devices typically use wafer bonding technologies. Due to being subjected to mechanical stresses, the industrial applications of these components require high mechanical strength, low leakage, and high reliability of the wafer-bonded interface. For a knowledge of the strength determining factors (such as fatigue and stress corrosion) of wafer bonding, for quality control, and for the development of new bonding technologies, a method for determining the strength of such bonds is important to producers and users of MEMS devices, of wafer bonding equipment, and of wafer materials.

2 Scope

2.1 This Test Method allows determination[1, 2, 3, 4, 5, 6] of the bond-interface strength, using micro-chevron test structures, of bonded wafer materials. The bond-interface strength is expressed in units of energy per unit area and is technically the critical wafer bond toughness. It is restricted to the use of silicon wafers with or without a thin intermediate layer with one geometrical configuration for the micro-chevron test structures.

2.2 The processing of the micro-chevron test structures (including steps such as the etching used to create the micro-chevron pattern, the bonding of the wafers, and the sawing of the bonded wafers) is beyond the scope of this Test Method. Although these steps are discussed in general terms, this Test Method does not recommend etching, bonding, or sawing techniques, rather, it is used to ascertain the bond strength once the wafers are bonded. Therefore, this Test Method can be used to determine a preferred bonding technique.

NOTE 1: Also, the design and fabrication of the sawing guides and the determination of any geometrical parameters is considered outside the scope of this Test Method.

2.3 This Test Method can be used to obtain the on-wafer spatial distributions of wafer bond strength.

NOTE 2: In addition to this micro-scale chevron test method, there is a macro-scale chevron test method for metallic materials. [ASTM E1304]

---

[1] Petzold, M., Bagdahn, J., Katzer, D. "Quality and mechanical reliability assessment of wafer-bonded micromechanical components." *Microelectronics Reliability 39* (1999): pp. 1103–1108.

[2] Bagdahn, J., A., Wiemer, M., and Petzold, M. "Measurement of the local strength distribution of directly bonded silicon wafers using the micro-chevron-test." Proc. 5th International Symposium on Semiconductor Wafer Bonding, *Electrochem. Soc.* PV 99-35 (2001): pp. 218–223.

[3] Petzold, M., Knoll, H., and Bagdahn, J. "Strength assessment of wafer-bonded micromechanical components using the Micro-Chevron-Test." Proceedings of the SPIE 4558: Reliability, Testing, and Characterization of MEMS/MOEMS, San Francisco, California, USA (October 22–24, 2001): pp. 133–142.

[4] Ebert, M., Dresbach, C., Bagdahn, J., Wiemer, M., Glien, K., Graf, J. "Mechanical failure behavior of glass frit bonded structures." Conference on Design, Testing, Integration and Packaging of MEMS, Montreux, Switzerland (June 2005).

[5] Bagdahn, J., Bernasch, M., Fischer, C., Wiemer, M. "Comparison of the Mechanical Properties of Low Temperature Bonded Test Samples." 210th ECS Meeting: Wafer Bonding for Advanced Device Applications II, Cancun, Mexico (October 29–November 3, 2006)

[6] Tadepalli, R., and Turner, K.T. "A Chevron Specimen for the Measurement of Mixed-Mode Interface Toughness of Wafer Bonds." Engineering Fracture Mechanics 75 (2008): pp. 1310–1319.

Documents Document Sharing Hub
Full document details: SEMI MS5-0813-0819R

NOTICE: SEMI Standards and Safety Guidelines do not purport to address all safety issues associated with their use. It is the responsibility of the users of the Documents to establish appropriate safety and health practices, and determine the applicability of regulatory or other limitations prior to use.

3 Limitations

3.1 The samples in this Test Method use a built-in notch to initiate a crack where other methods use fatigue pre-cracks. Caution should be used in comparing the results from different test methods.

3.2 Variations in the relative humidity are known to affect the results of standard chevron tests; the user of this method is encouraged to consider controlling relative humidity while performing this experiment.

4 Referenced Standards and Documents

4.1 *ASTM Standards*[7]

ASTM E691 — Standard Practice for Conducting an Interlaboratory Study to Determine the Precision of a Test Method

ASTM E1304 — Standard Test Method for Plane-Strain (Chevron-Notch) Fracture Toughness of Metallic Materials

NOTICE: Unless otherwise indicated, all documents cited shall be the latest published versions.

5 Terminology

5.1 *Abbreviations and Acronyms*

5.1.1 *FEA* — finite element analysis

5.1.2 *FEM* — finite element method

5.1.3 *MEMS* — microelectromechanical system

5.1.4 *RIE* — reactive ion etching

5.2 *Definitions*

5.2.1 *bond strength* — the material's resistance against crack propagation measured in units of energy per unit area.

5.2.2 *critical crack length* — the depth of penetration of the narrow split between bonded wafers that occurs at the maximum applied load, after which, an unstable fracture process results and the propagation of this narrow split accelerates.

5.2.3 *critical wafer bond toughness* — the material parameter used to characterize the bond strength between two materials at their interface expressed in terms of energy per unit area (see ¶ 5.3.1.12).

5.2.4 *micro chevron* — a wedge-like pattern in the wafer bond interface used to determine wafer bond strength.

5.2.5 *microelectromechanical systems* — a term used to describe micron-scale structures, sensors, actuators, and technologies used for their manufacture (such as, silicon process technologies), or combinations thereof.

5.2.6 *test structure* — a fabricated component (such as, a fixed-fixed beam or cantilever) that is used to extract information (such as, the residual strain or the strain gradient of a layer) about the fabrication process.

5.3 *Symbols*

5.3.1 For Wafer-Bond Strength Measurements and Calculations

5.3.1.1 α_0 — the initial crack length ratio.

5.3.1.2 β — the angle at the tip of the micro-chevron test structure.

5.3.1.3 A_0 — the minimum mouth length in the x-direction, that is, the positive distance from the physical opening of the mouth to the tip of the micro-chevron tongue.

[7] ASTM International, 100 Barr Harbor Drive, West Conshohocken, PA 19428-2959, USA; Telephone: +1.610.832.9585, Fax: +1.610.832.9555, http://www.astm.org

Documents
Document Sharing Hub

Full document details: SEMI MS5-0813-0819R

5.3.1.4 a_0 — the minimum mouth length in the *x*-direction from the load line, that is, the positive distance from the opening of the mouth at the load line to the tip of the micro-chevron tongue.

5.3.1.5 A_1 — the maximum mouth length in the *x*-direction, that is, the positive distance from the physical opening of the mouth to where the micro-chevron tongue meets the edge of the test structure.

5.3.1.6 a_1 — the maximum mouth length in the *x*-direction from the load line, that is, the positive distance from the opening of the mouth at the load line to where the micro-chevron tongue meets the edge of the test structure.

5.3.1.7 B — the test structure width.

5.3.1.8 c_h — the distance from the center of the hole in the stud to the gluing surface of the stud.

5.3.1.9 d_h — the diameter of the hole in the stud.

5.3.1.10 $\overline{E}$ — the plane strain elastic modulus.

5.3.1.11 F_{max} — the maximum fracture load.

5.3.1.12 G_{cwb} — the critical wafer bond toughness (see ¶ 5.2.3).

5.3.1.13 H — the test structure height, namely, the thickness of the test structure after the two wafers are bonded.

5.3.1.14 h_1 — the thickness of the top wafer.

5.3.1.15 h_2 — the thickness of the bottom wafer.

5.3.1.16 H_K — the etch depth of the bottom wafer, or the opening of the mouth in the *z*-direction.

5.3.1.17 l_S — the length of the studs in the *y*-direction at the gluing surface.

5.3.1.18 η — the ratio of thicknesses of the bottom (patterned) and top (unpatterned) wafers used in the calculation of Y_{min}. η is calculated by dividing the smaller of these values by the larger.

5.3.1.19 W — the physical test structure length.

5.3.1.20 w — the test structure length from the load line.

5.3.1.21 w_{LL} — the positive distance of the load line in the *x*-direction from the unbonded edge of the test structure.

5.3.1.22 w_S — the width of the studs in the *x*-direction at the gluing surface.

5.3.1.23 Y_{min} — the minimum value of the geometry function derived by numerical simulations using 3-D finite element analysis (FEA).

5.3.2 *For Combined Standard Uncertainty Calculations*

5.3.2.1 σ_B — the one sigma uncertainty of the value of B.

5.3.2.2 σ_{cert} — the certified one sigma uncertainty of the load cell.

5.3.2.3 σ_E — the one sigma uncertainty of the value of $\overline{E}$.

5.3.2.4 σ_{Fmax} — the one sigma uncertainty of the value of F_{max}.

5.3.2.5 σ_W — the one sigma uncertainty of the value of W.

5.3.2.6 σ_w — the one sigma uncertainty of the value of w.

5.3.2.7 σ_{wLL} — the one sigma uncertainty of the value of w_{LL}.

5.3.2.8 σ_{Ymin} — the one sigma uncertainty of the value of Y_{min}.

5.3.2.9 *cert* — the certified value of the load cell.

5.3.2.10 G_{cwbmax} — the maximum critical wafer bond toughness as determined in an uncertainty calculation.

5.3.2.11 G_{cwbmin} — the minimum critical wafer bond toughness as determined in an uncertainty calculation.

5.3.2.12 u_B — the component in the combined standard uncertainty calculation that is due to the uncertainty of B.

Documents Document Sharing Hub
Full document details: SEMI MS5-0813-0819R

5.3.2.13 u_c — the combined standard uncertainty value (that is, the estimated standard deviation of the result).

5.3.2.14 u_E — the component in the combined standard uncertainty calculation that is due to the uncertainty of $\overline{E}$.

5.3.2.15 u_{Fmax} — the component in the combined standard uncertainty calculation that is due to the uncertainty of $F_{max.}$

5.3.2.16 u_w — the component in the combined standard uncertainty calculation that is due to the uncertainty of w.

5.3.2.17 u_{Ymin} — the component in the combined standard uncertainty calculation that is due to the uncertainty of $Y_{min.}$

6 Summary of Test Method

6.1 This Test Method can be used to obtain a measure of wafer bond strength, in terms of the critical wafer bond toughness, G_{cwb}, and the combined standard uncertainty value, u_c, associated with the measurement. G_{cwb} is a measure of the strength of atomic bonds, which can be viewed as the material's resistance against crack propagation.

6.2 *Test Structure* — A micro-chevron test structure, such as shown in Figure 1 (a), is the test structure used for these measurements. It consists of two materials, typically two silicon wafers as used in this Test Method, bonded together. The main characteristic of the test structure is the wedge-like structure (which gives it its name) in the bond interface. This chevron pattern is created by etching away the undesired wafer material around the pattern in one of the wafers before bonding and sawing thereby creating an air space, or mouth, within the test structure, as can be seen in the cross sectional side view in Figure 1 (b).

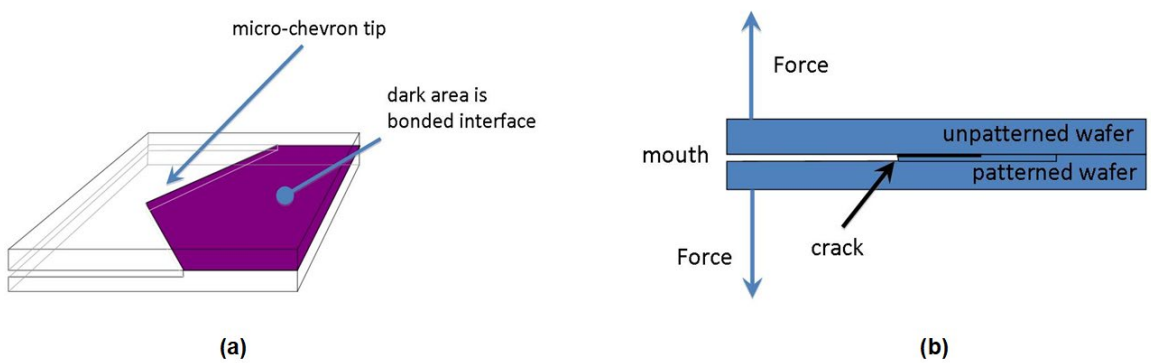

Figure 1
Schematics of Micro-Chevron Test Structure Showing (a) an Angled View of the Bonded Interface and (b) a Cross Sectional Side View of the Formation of a Crack at the Micro-Chevron Tip, where *F* is the Applied Load

6.3 *Mounting* — Studs [as shown in Figure 2 (a)] are glued to either side of the mouth of the micro-chevron test structure, as shown in Figure 2 (b), and positioned within the material testing machine by way of the hole in the studs. The specific method for gluing the blocks to the micro-chevron and connecting the blocks to the materials testing machine are dependent on the tools available to the user. To assist the user of this standard, gluing and fixturing approaches that have been successfully used in the development of this standard and the related round robin are included in Related Information 1.

Documents
Document Sharing Hub
Full document details: SEMI MS5-0813-0819R

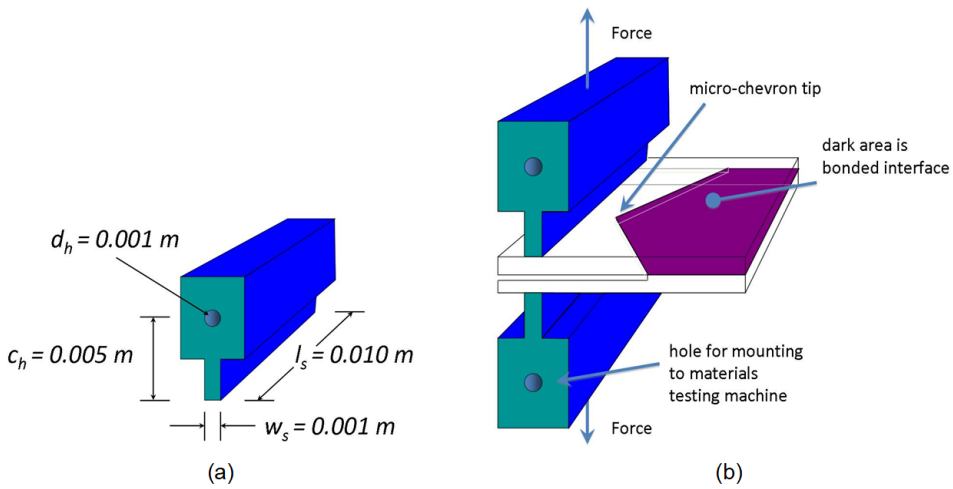

Figure 2
Mounting of Studs to a Micro-Chevron Test Structure Where
(a) Indicates the Stud Geometrical Dimensions and (b) Shows the Final Sample Assembly

6.4 *Test* — The material testing machine applies load to the micro-chevron structure, as shown in Figure 2 (b). The displacement of the opening of the mouth of the sample in the test structure's *z*-direction (the direction of which is indicated in Figure 1 (b) is increased at a constant speed and the corresponding applied load is recorded. At some applied load, the force will exceed the strength of the bond (or one of the bonded wafers) and a crack will propagate. If the crack propagates in the bond plane, it will initiate in the micro-chevron tip, due to the high local stress concentration. In other words, the micro-chevron tip serves as a pre-crack. The crack grows in a stable fashion with increased loading as shown in Figure 4 (a). After the crack has reached the critical crack length, an unstable fracture process results and the propagation of the crack accelerates. The maximum load, F_{max}, corresponding to the critical crack length is measured. Note that if the crack propagates through one of the bonded wafers, the crack will not propagate in a stable fashion but will propagate as shown in Figure 4 (b) and the results can be identified as a non-successful test as defined below.

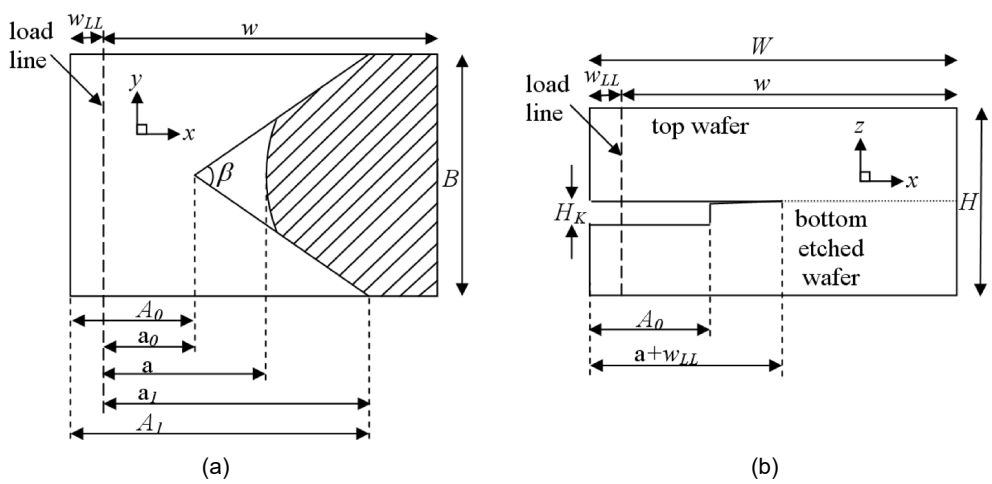

#1 For upper case letters in this figure, both endpoints of the dimension are to a physical edge.
For lower case letters, one endpoint of the dimension is to the load line.

Figure 3
Schematic of a Micro-Chevron Notched Test Structure
(a) on the Fracture Plane and (b) a Cross-Sectional Side View

Documents Document Sharing Hub
Full document details: SEMI MS5-0813-0819R

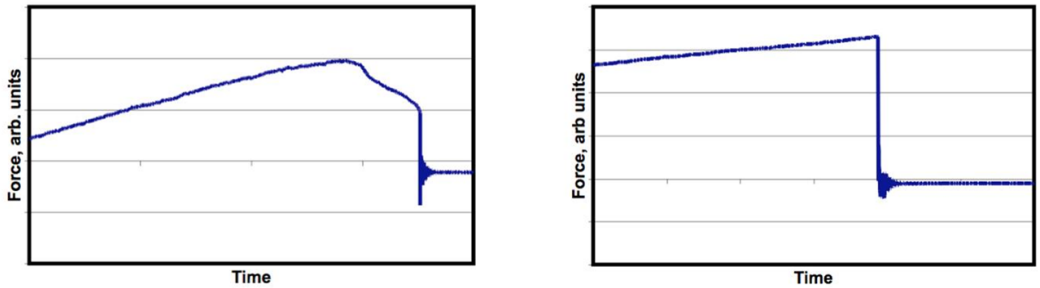

(a) Successful Test (b) Unsuccessful Test

Figure 4
Typical Successful (a) and Unsuccessful (b) Load-Displacement Plots from Micro-Chevron Test Structures. The gently curved drop-off in (2) reflects delamination from the pre-crack created by the chevron tip while the vertical drop-off in (b) reflects the measurement of an alternate failure, such as one of the two chips breaking.

6.5 *Calculation* — The critical wafer bond toughness, G_{cwb}, is calculated given F_{max} and the minimum value of the geometry function, Y_{min}, which is determined from FEM simulations for the unique micro-chevron geometry configuration. The calculation for the combined standard uncertainty, u_c, is given in Appendix 1.

NOTE 3: This Test Method can be used to obtain the on-wafer spatial distributions of wafer bond strength, as shown in Figure 5.

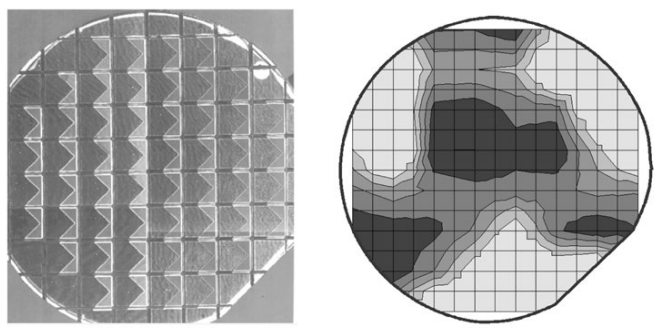

(a) (b)

Figure 5
(a) Acoustic Micrograph Showing the Interface of the Micro-Chevron Test Structures Used to Find (b) The On-Wafer Spatial Distributions of Wafer Bond Strength

7 Apparatus

7.1 *Material Testing Machine with an Accurate Load Cell* — For silicon bonds, a 10 N (20 N max.) load cell is used. (For materials with tougher bonds, a 100 N or larger load cell may be required.) The load cell size (*cert*) should be as close to the maximum fracture load, F_{max}, as possible but still greater than it. An approximate value for*ce rt* can be found from an estimate for the critical wafer bond toughness, G_{cwb}, using the following equation:

$$cert \approx \frac{B\sqrt{G_{cwb}\overline{E}w}}{Y_{min}} \tag{1}$$

where details concerning the parameters in this equation can be found in §§ 5 and 11.

7.2 *Two Identical Studs with a 1 mm × 10 mm Flat Surface for Bonding* — Each stud is symmetrical about an *yz*-plane and about an *xz*-plane. These studs [one of which is shown in Figure 2 (a)] are glued to either side of the mouth

Documents
Document Sharing Hub
Full document details: SEMI MS5-0813-0819R