DEP SPECIFICATION

WELDING OF METALS (AMENDMENTS/SUPPLEMENTS TO API RP 582)

DEP 30.10.60.18-Gen.

February 2012

(Amendment A01 has been incorporated – February 2013)

ECCN EAR99

DESIGN AND ENGINEERING PRACTICE

© 2012 Shell Group of companies
All rights reserved. No part of this publication may be reproduced, stored in a retrieval system, published or transmitted, in any form or by any means, without the prior written permission of the copyright owner or Shell Global Solutions International BV.

This document contains information that is classified as EAR99 and, as a consequence, can neither be exported nor re-exported to any country which is under an embargo of the U.S. government pursuant to Part 746 of the Export Administration Regulations (15 C.F.R. Part 746) nor can be made available to any national of such country. In addition, the information in this document cannot be exported nor re-exported to an end-user or for an end-use that is prohibited by Part 744 of the Export Administration Regulations (15 C.F.R. Part 744)..

Documents
Document Sharing Hub

Full document details: SHELL 30.10.60.18 0

PREFACE

DEP (Design and Engineering Practice) publications reflect the views, at the time of publication, of Shell Global Solutions International B.V. (Shell GSI) and, in some cases, of other Shell Companies.

These views are based on the experience acquired during involvement with the design, construction, operation and maintenance of processing units and facilities. Where deemed appropriate DEPs are based on, or reference international, regional, national and industry standards.

The objective is to set the standard for good design and engineering practice to be applied by Shell companies in oil and gas production, oil refining, gas handling, gasification, chemical processing, or any other such facility, and thereby to help achieve maximum technical and economic benefit from standardization.

The information set forth in these publications is provided to Shell companies for their consideration and decision to implement. This is of particular importance where DEPs may not cover every requirement or diversity of condition at each locality. The system of DEPs is expected to be sufficiently flexible to allow individual Operating Units to adapt the information set forth in DEPs to their own environment and requirements.

When Contractors or Manufacturers/Suppliers use DEPs, they shall be solely responsible for such use, including the quality of their work and the attainment of the required design and engineering standards. In particular, for those requirements not specifically covered, the Principal will typically expect them to follow those design and engineering practices that will achieve at least the same level of integrity as reflected in the DEPs. If in doubt, the Contractor or Manufacturer/Supplier shall, without detracting from his own responsibility, consult the Principal.

The right to obtain and to use DEPs is restricted, and is typically granted by Shell GSI (and in some cases by other Shell Companies) under a Service Agreement or a License Agreement. This right is granted primarily to Shell companies and other companies receiving technical advice and services from Shell GSI or another Shell Company. Consequently, three categories of users of DEPs can be distinguished:

1) Operating Units having a Service Agreement with Shell GSI or another Shell Company. The use of DEPs by these Operating Units is subject in all respects to the terms and conditions of the relevant Service Agreement.

2) Other parties who are authorised to use DEPs subject to appropriate contractual arrangements (whether as part of a Service Agreement or otherwise).

3) Contractors/subcontractors and Manufacturers/Suppliers under a contract with users referred to under 1) or 2) which requires that tenders for projects, materials supplied or - generally - work performed on behalf of the said users comply with the relevant standards.

Subject to any particular terms and conditions as may be set forth in specific agreements with users, Shell GSI disclaims any liability of whatsoever nature for any damage (including injury or death) suffered by any company or person whomsoever as a result of or in connection with the use, application or implementation of any DEP, combination of DEPs or any part thereof, even if it is wholly or partly caused by negligence on the part of Shell GSI or other Shell Company. The benefit of this disclaimer shall inure in all respects to Shell GSI and/or any Shell Company, or companies affiliated to these companies, that may issue DEPs or advise or require the use of DEPs.

Without prejudice to any specific terms in respect of confidentiality under relevant contractual arrangements, DEPs shall not, without the prior written consent of Shell GSI, be disclosed by users to any company or person whomsoever and the DEPs shall be used exclusively for the purpose for which they have been provided to the user. They shall be returned after use, including any copies which shall only be made by users with the express prior written consent of Shell GSI. The copyright of DEPs vests in Shell Group of companies. Users shall arrange for DEPs to be held in safe custody and Shell GSI may at any time require information satisfactory to them in order to ascertain how users implement this requirement.

All administrative queries should be directed to the DEP Administrator in Shell GSI.

Documents
Document Sharing Hub

Full document details: SHELL 30.10.60.18 0

TABLE OF CONTENTS

PART I INTRODUCTION 5
1.1 SCOPE 5
1.2 DISTRIBUTION, INTENDED USE AND REGULATORY CONSIDERATIONS 5
1.3 DEFINITIONS 6
1.4 CROSS-REFERENCES 6
1.5 SUMMARY OF MAIN CHANGES 6
1.6 COMMENTS ON THIS DEP 7
1.7 DUAL UNITS 7

PART II GENERAL 8
2.1 GENERAL 8
2.2 DEVIATIONS 8
2.3 METHODS AND EXTENT OF NON-DESTRUCTIVE EXAMINATION 8
2.4 TESTING QUALIFICATIONS 8
2.5 EQUIPMENT 9
2.6 SPECIAL REQUIREMENTS 9

PART III AMENDMENTS/SUPPLEMENTS TO API RP 582 10

1 Scope 10

2 Normative References 10

4 General Welding Requirements 10
4.7 Before Welding 11
4.8 During Welding 17
4.9 After Welding 19

5 Welding Processes 20
5.1 Acceptable Welding Processes 21
5.2 Limitations of Fusion Welding Processes 21

6 Welding Consumables (Filler Metal and Flux) 24
6.1 General 24
6.4 Stainless Steel Welding (P-6, P-7, and P-8) 25
6.5 Duplex Stainless Steel Welding 26
6.6 SAW 27
6.7 Electroslag Welding (for Corrosion Resistant Weld Overlay) 28
6.8 Consumable Storage and Handling 28
6.10 Carbon steel 29
6.11 Nickel Alloys 30
6.12 Copper Alloys 30
6.13 Titanium Alloys 30
6.14 Nickel Steels 31
6.15 6 % Mo Superaustenitic Stainless Steels 31
6.16 P91 31

7 Shielding and Purging Gases 32

8 Preheating and Interpass Temperature 32

9 Post Weld Heat Treatment (PWHT) 33

10 Cleaning and Surface Preparation 37
10.13 9 % Nickel Steel 37

11 Special Procedure Qualification Requirements/Testing 37
11.1 General 37

12 Other Items 38
12.1 Backing Materials 38
12.4 Temporary Attachments 38
12.5 Stud Welding 39
12.6 Hardness Testing—Weld Procedure Qualification and Production Testing 39

Documents
Document Sharing Hub

Full document details: SHELL 30.10.60.18 0

12.7 Single-pass Welds 40
12.8 Tube Skin Thermocouple Welding 40

13 Environment 41

Annex A (informative) Welding Consumables for Shielded Metal Arc Welding (SMAW) 41

Annex B (normative) Weld Overlay and Clad Restoration (Back Cladding) 41

Annex C (normative) Carbon steel Welding 51

Annex D (normative) Low Alloy Steel Welding 51

Annex E (normative) Stainless Steels Welding 54

Annex F (normative) Ni steels 64

Annex G (normative) High Ni Alloys Welding 66

Annex H (normative) Copper Alloys Welding 67

Annex I (normative) Aluminum alloys Welding 68

Annex J (normative) Titanium alloys Welding 69

Annex K (normative) Dissimilar Welding 70

PART IV REFERENCES 73

Documents
Document Sharing Hub

Full document details: SHELL 30.10.60.18 0

PART I INTRODUCTION

1.1 SCOPE

This DEP specifies requirements and give recommendations for welding of metals. It is based on API RP 582 (second edition, December 2009). Part III of this DEP amends, supplements and deletes various clauses of API RP 582, and follows the clause numbering of API RP 582 for easy reference. The annexes primarily cover details that are material specific and other welding information not covered in API RP 582.

All clauses of API RP 582 not modified by this DEP remain valid as written.

This DEP essentially lists basic and expected good manufacturing practices. Most of these quality assurance requirements or technology items would be normally expected to be in place in good quality welding shops or other welding organizations and can be found in different forms in most user's specifications. They should not be viewed as extraordinary or unusual requirements unless so identified. This DEP also includes experience-based requirements and warnings to prevent defects and rework. Some of the specific technical requirements may not be commonly used in industrial standards or well known but they are important to be identified as they would have an impact on weld performance. This DEP is also intended to be used as a yardstick of fabrication quality assessment. It can be easily measured by the number of exceptions a fabrication shop will require to be able to comply with the basic good fabrication practices. There is an emphasis on proper work procedures, record keeping and traceability. These are concepts, which should be well developed in quality fabrication organizations.

It is important to review this DEP with the fabrication organization prior to fabrication to ensure that all questions and issues are settled. It is possible that in some cases the fabricator can offer an alternate approach leading essentially to the same result. In such cases the Principal may accept such alternate solutions and record them in using the project standard management of change (MOC) procedures prior to commencement of fabrication.

Additional technical aspects of welding relevant to the job and not specifically listed by this DEP should be covered individually via review of proposed welding procedures and/or other agreements made between the Manufacturer and Contractor or Principal representatives during prefabrication meetings.

The scope of this DEP does not include pipelines and civil structural welding.
DEP 61.40.20.30-Gen., DEP 37.81.40.31-Gen. and DEP 30.10.60.30-Gen. cover pipeline welding, and DEP 37.81.10.34-Gen. covers civil structural welding.

This is a revision of the DEP of the same number dated May 2004; see (1.5) regarding the changes.

1.2 DISTRIBUTION, INTENDED USE AND REGULATORY CONSIDERATIONS

Unless otherwise authorised by Shell GSI, the distribution of this DEP is confined to Shell companies and, where necessary, to Contractors and Manufacturers/Suppliers nominated by them. Any authorised access to DEPs does not for that reason constitute an authorisation to any documents, data or information to which the DEPs may refer.

This DEP is intended for use in facilities related to oil and gas production, gas handling, oil refining, chemical processing, gasification, distribution and supply/marketing. This DEP may also be applied in other similar facilities.

When DEPs are applied, a Management of Change (MOC) process shall be implemented; this is of particular importance when existing facilities are to be modified.

If national and/or local regulations exist in which some of the requirements could be more stringent than in this DEP, the Contractor shall determine by careful scrutiny which of the requirements are the more stringent and which combination of requirements will be acceptable with regards to the safety, environmental, economic and legal aspects. In all cases, the Contractor shall inform the Principal of any deviation from the requirements of this DEP which is considered to be necessary in order to comply with national and/or local

Documents
Document Sharing Hub

Full document details: SHELL 30.10.60.18 0

regulations. The Principal may then negotiate with the Authorities concerned, the objective being to obtain agreement to follow this DEP as closely as possible.

1.3 DEFINITIONS

1.3.1 General definitions

The **Contractor** is the party that carries out all or part of the design, engineering, procurement, construction, commissioning or management of a project or operation of a facility. The Principal may undertake all or part of the duties of the Contractor.

The **Manufacturer/Supplier** is the party that manufactures or supplies equipment and services to perform the duties specified by the Contractor or Principal.

NOTE: For the purposes of this DEP, **Vendor** is the supplier of the equipment, not necessarily the Manufacturer.

The **Principal** is the party that initiates the project and ultimately pays for it. The Principal may also include an agent or consultant authorised to act for, and on behalf of, the Principal.

The word **shall** indicates a requirement.

The word **should** indicates a recommendation.

The word **may** indicates a permissible option.

1.3.2 Specific definitions

Term	Definition
Subcontractor	a company awarded a contract by a Contractor to do part of the work awarded to the Contractor by the Principal. The work of the Subcontractor is carried out under the direction and control of the Contractor. Under its model contracts the Principal maintains the right to review all proposed Subcontractors, and subcontracts.
Welding Technical Authority (TA)	person identified by the Principal as the authority for welding technology. In Shell, the TA assignment will follow the structure established by the DCAF (Discipline Controls and Assurance Framework) process used in major projects. For work that is performed for small projects or maintenance activities, a welding focal point will normally be identified as the TA.

1.4 CROSS-REFERENCES

Where cross-references to other parts of this DEP are made, the referenced section number is shown in brackets ( ). Other documents referenced by this DEP are listed in (Part IV).

1.5 SUMMARY OF MAIN CHANGES

This DEP is a revision of the DEP of the same number dated May 2004 (with DEP Circulars 01/06, 44/07 and 16/08 incorporated). This DEP has undergone a complete re-write. In addition, it has been harmonized with the following local and project welding specifications:

a) Previous DEP 30.10.60.18-Gen. (2002).

b) Prior DEP 30.10.60.18-Gen. (October 1995).

c) 2EG-50 Welding (Including Heat Treatment, NDT & Other Testing Requirements).

d) 2 GS-50 Welding, Post weld Heat Treatment, and Weld Testing for Pressure Equipment.

e) 2GS-51 PS MZR Crude Tank Replacement Project.

f) 2GS-57 Welding, PWHT, and Inspection of Pipe with Internal Overlay.

g) S-21 Construction Specification Section 21: Welding (SPDC-Nigeria).

h) SES 46-3 Welding Austenitic/Ferritic (Duplex and Super Duplex) stainless Steel.

Documents
Document Sharing Hub

Full document details: SHELL 30.10.60.18 0

i) BSP-12-Standard-601 – The Welding of Metals.

j) API 577 Welding Processes, Inspection, and Metallurgy.

k) DEP 31.38.01.31-UIE Welding and Inspection of Process and Utility Pipework, Vessels and Equipment at Land and Offshore Facilities. January 2011.

l) DISSIMILAR WELDS AMENDMENTS AND SUPPLEMENTS TO STANDARDS Draft proposal, Dec 8, 2010 Frank J.Vacha.

m) STD 57-2-01 Welding of pressure Equipment and Piping Project Specification for Scotford Expansion 1 Downstream.

n) 118-57-11 ASME/ANSI Registered Welding Procedures.

o) MZR – Welding & Materials Supplement to API 650.

p) Filler Metal Procurement Guidelines.

Amendment A01

Section	Change
PART I, 1.6	Updated DEP feedback process.
PART IV PART IV	Reference to pressure vessel DEPs have been updated. Added DEP feedback form - DEP 00.00.05.80-Gen.

1.6 COMMENTS ON THIS DEP

Amendment A01

Comments on this DEP may be submitted to the Administrator using one of the following options:

Shell DEPs Online (Users with access to Shell DEPs Online)	Enter the Shell DEPs Online system at https://www.shelldeps.com Select a DEP and then go to the details screen for that DEP. Click on the “Give feedback” link, fill in the online form and submit.
DEP Feedback System (Users with access to Shell Wide Web)	Enter comments directly in the DEP Feedback System which is accessible from the Technical Standards Portal http://sww.shell.com/standards. Select “Submit DEP Feedback”, fill in the online form and submit.
DEP Standard Form (Other users)	Use DEP Standard Form 00.00.05.80-Gen. to record feedback and email the form to the Administrator at standards@shell.com.

Feedback that has been registered in the DEP Feedback System by using one of the above options will be reviewed by the DEP Custodian for potential improvements to the DEP.

1.7 DUAL UNITS

This DEP contains both the International System (SI) units, as well as the corresponding US Customary (USC) units, which are given following the SI units in brackets. When agreed by the Principal, the indicated USC values/units may be used.

Documents
Document Sharing Hub

Full document details: SHELL 30.10.60.18 0

PART II GENERAL

2.1 GENERAL

Part III of this DEP is written as amendments and supplements to API RP 582. Wherever reference is made to API RP 582, it shall be understood to mean API RP 582 as amended/supplemented by this DEP.

For ease of reference, the clause numbering of API RP 582 has been used throughout Part III of this DEP.

Clauses in API RP 582, which are not mentioned in this DEP shall remain valid as written.

The Principal shall identify a welding Technical Authority (TA) whenever this DEP is applied. For work that is performed for small projects or maintenance activities, a welding focal point will normally be identified as the TA. This person shall be responsible for any special requirements clauses in this DEP identified by the statement, “If required by the Principal…”

2.2 DEVIATIONS

All conflicts between the requirements of this DEP and other relevant documents shall be referred to the Principal’s welding TA for resolution.

2.3 METHODS AND EXTENT OF NON-DESTRUCTIVE EXAMINATION

This DEP does not include a complete specification for testing and the non-destructive examination (NDE) requirements for all production welds. Only the NDE or testing which may be specific to or resulting from the use of a particular welding process (e.g., GMAW, FCAW) or to assure in service weld performance (e.g., ferrite tests) are included.

The methods and extent of NDE for pressure vessels or piping are covered by other applicable DEPs, the respective design code, and relevant design/purchasing documents.

- The extent of piping inspection is covered by DEP-31.38.01.31-Gen.
- The extent of pressure vessel inspection is contained in the DEP associated with the applicable pressure vessel design code.

2.4 TESTING QUALIFICATIONS

Mechanical, chemical and electrical testing shall be performed with equipment calibrated in accordance with applicable ASME, ASTM or ISO standards or by a recognised local Regulatory Agency or third-party agency (e.g., TŰV, Lloyds, DNV, EN, CSA).

Inspection Personnel

The inspection personnel to be used by the Contractor are to be individually approved by the Principal. The Principal reserves the option to interview operatives and, when necessary, to require a practical skills test.

The minimum qualification requirements are as follows:

Visual	ASNT, CGSB or EN 473 or ISO 9712, Level 2
MT	ASNT, CGSB or EN 473 or ISO 9712, Level 2
PT	ASNT, CGSB or EN 473 or ISO 9712, Level 2
Radiography	ASNT, CGSB or EN 473 or ISO 9712, Level 2
Interpretation only	ASNT, CGSB or EN 473 or ISO 9712, Level 2
Ultrasonic	ASNT, CGSB or EN 473 or ISO 9712, Level 2

Additionally, supervisors responsible for overseeing and controlling NDE activities shall be Level 3 qualified.

Documents
Document Sharing Hub

Full document details: SHELL 30.10.60.18 0

Alternative qualifications shall be accepted only by specific approval of the Principal. Approval shall be subject to satisfactory demonstration of independence and control of the qualification specifications and reviewed by an NDE Specialist.

2.5 EQUIPMENT

All welding equipment shall be in accordance with the relevant sections of either EN 60974-1 or equivalent AWS standard.

Welding sets shall be calibrated or verified at intervals not exceeding 12 months.

Welding generators, cables, electrode holders, earth return clamps and all other ancillary equipment shall be supplied by the Contractor or Manufacturer and shall conform to a standard acceptable to the Principal that ensures acceptable welds and continuity of operations. All welding equipment and cutting equipment shall be maintained in good condition and working order throughout the Contract to ensure the safety of the personnel. All gas cutting equipment shall comply with ISO 5172 or equivalent AWS standard. The continuous rated capacity of all equipment shall be at least 30 % greater than the duty requirement for any welding or cutting procedure used in the Contract.

All welding equipment and associated metres shall be verified as calibrated immediately prior to the commencement of production welding and thereafter at regular intervals according to the Contractor's or Manufacturer's calibration procedure. This procedure shall be agreed with the Principal before the start of production. In the case of critical equipment where heat input and interpass temperature will have impact on metal toughness, such measurements shall be done either continuously or if agreed by the Principal, for a minimum of three times per shift.

Ammeters and voltmeters shall be fitted to welding equipment for the GMAW, FCAW and SAW welding processes.

Separate voltmeters and ammeters ('tong tester' or Hall effect type tester) shall be provided for all other arc-welding processes by the Contractor or Manufacturer.

The equipment shall be operated within the current and voltage ranges given in the qualified welding procedure; and, any equipment which does not meet these requirements shall be repaired or replaced at the Contractor's or Manufacturer's expense.

If clamps are welded to the pipe during fit up and welding, these attachment welds shall be treated as temporary welds per API RP 582, section 12.4.

The Contractor or Manufacturer shall supply, as required, ovens for drying and storage of electrodes. The ovens shall be capable of accurate temperature control and be of sufficient size to facilitate uniform drying of the electrodes.

The Contractor shall ensure that all welding operators are provided with full protective clothing, helmets, suitable welding glasses and visors.

2.6 SPECIAL REQUIREMENTS

Requirements introduced by a statement: "If required by the Principal…" are special requirements, which shall be confirmed by the Principal. It is intended that this confirmation be performed either at the beginning of a project (as a whole), or for individual equipment purchases, during a pre-award or prefabrication meeting.

Documents
Document Sharing Hub

Full document details: SHELL 30.10.60.18 0

PART III AMENDMENTS/SUPPLEMENTS TO API RP 582

1 Scope

Add new 1.4:

1.4 Throughout API RP 582, all instances of the word "should" shall be read as "shall" unless otherwise approved by the Principal.

2 Normative References

Add the following:

API TR 938-B, Use of 9Cr-1Mo-V (Grade 91) Steel in the Oil Refining Industry

ASME/Boiler and Pressure Vessel Code

- Section II, Materials Part D – Properties
- Section V Nondestructive Examination
- *Section VIII-Rules for Construction of Pressure Vessels*

ASTM A923, Standard Test Methods for Detecting Detrimental Intermetallic Phase in Duplex Austenitic/Ferritic Stainless Steels;

ASTM E562, Standard Test Method for Determining Volume Fraction by Systematic Manual Point Count;

AWS A4.3, Standard Methods for Determination of the Diffusible Hydrogen Content of Martensitic, Bainitic, and Ferritic Steel Weld Metal Produced by Arc Welding;

AWS D10.11, Recommended Practices for Root Pass Welding without Backing;

CSA Welded Steel Construction (AWS D1.1 for US based companies);

CSA W59.2, Welded Aluminium construction (AWS D1.2 for US based companies);

European Pressure Equipment Directive (PED) 97/23

WRC Bulletin 421, Welding Type 347 Stainless Steel – An Interpretative Report, R. David Thomas Jr. and Robert W. Messler, Jr.

WRC Bulletin 452, Recommended Practices for Local Heating of welds in Pressure Vessels, Joseph W. McEnerney and Pingsha Dong

SSPC-SP 5/NACE No. 1, White Metal Blast Cleaning

DEP 30.10.02.31-Gen.-Shell Design and Engineering Practice: Metallic Materials – Prevention of Brittle Fracture

EN 473, Non-destructive Testing. Qualification and Certification of NDE Personnel – General Principles

4 General Welding Requirements

Add the following to 4.1:

Structural welding may alternatively require compliance with the local jurisdictional code (e.g., CSA W59 in Canada). When welding is performed onto the pressure boundary, it shall be qualified and executed in accordance with ASME/BPVC Sec IX or applicable pressure vessel code.

Add the following to 4.2:

Procedures prequalified in accordance with other local jurisdictional codes will also be accepted, provided they comply with requirements of this DEP.

Documents
Document Sharing Hub

Full document details: SHELL 30.10.60.18 0

Add new 4.5:

4.5 Special Conditions

When the equipment or piping is identified as “sour” or “wet H2S” service, fabrication shall be in accordance with DEP-30.10.02.15-Gen. or DEP 30.10.02.17-Gen. as applicable.

Special root pass quality - Note: Whenever special root quality or profile is required, it should be specified in other purchasing specifications, such as drawings or manufacturing specifications.

Add new 4.6:

4.6 During new piping fabrication, deposition of weld metal, or weld build up to restore the wall thickness of the base metal for strength consideration or for meeting minimum design wall thickness requirement is prohibited.

Add new 4.7:

4.7 Before Welding

4.7.1 Welding procedure Specifications (WPS)

No fabrication welding shall be carried out before the WPS and the PQR are completed and approved by the Principal and the welders have been qualified.

When required by the Principal, a detailed WPS shall be prepared by the Contractor and submitted to the Principal for review and approval before procedure qualification welding is started. For piping fabrication, applicable WPS shall refer to the relevant piping classes and shall indicate the diameter and the thickness range, as appropriate. The WPS submitted shall also indicate repair-welding procedures separately. Only WPS approved by the Principal shall be used for procedure test welding.

4.7.1.1 Approval

WPS shall meet the local jurisdictional code requirements. In addition to the local requirements, the WPS shall meet the ASME/BPVC Sec IX or the relevant part of ISO 15614, and the requirements of this specification.

WPS approval may be withdrawn during production welding when excessive repair rates that cannot be attributed to bad workmanship are encountered.

4.7.1.2 Previously Qualified Procedures

WPSs previously qualified by the Contractor may be submitted for approval as long as requirements of this specification are met. If required by the Principal, they shall be supported by a WPQR witnessed by an acceptable Independent Third Party.

When required by the Principal, the Contractor shall furnish evidence of the successful application of the proposed procedures from previous work.

4.7.1.3 Procedures to be Qualified

Specification of welding essential variables for heat input/arc energy determination and all measurement records shall relate to unfactored arc energy.

Designated testing laboratories shall have a quality system in compliance with ISO 17025 or equivalent. The Principal may require laboratory to be pre-approved.

4.7.2 Welding Procedure Qualifications

Procedure and documentation – Unless local Codes/regulations require otherwise welding procedures shall be prepared and qualified according to ASME/BPVC Sec IX or ISO 15614. If required by the Principal, the PQR shall include test reports that demonstrate that the test welds meet chemical, mechanical and hardness requirements as specified by the Purchaser.

PQR review - Procedure qualifications records (PQR) shall always be attached to WPS for the review by the Purchaser, unless otherwise approved by the Purchaser.

Mock-up coupons – For designated thickness ranges or where required by purchasing specifications, all “highly restrained” joints or tube sheets with strength welded tube joints will

Documents
Document Sharing Hub

Full document details: SHELL 30.10.60.18 0

require full size mock-ups. Other methods of demonstration of sufficient weldment ductility in restrained weld cases can be proposed for acceptance by the Principal.

When welding production coupons for ASME/BPVC Sec VIII Div 2 vessels, the coupons shall be welded on production machines whenever possible. If this is agreed by the Principal as being impractical, a comparative review of the production and laboratory welding machines shall be made to ensure that the welding parameters used on the laboratory machines are indeed identical to those of the production welding machines.

Weld and NDE maps – Use of welding procedures (WPS) and NDE coverage shall be identified on general arrangement and/or detail drawings as applicable in a manner allowing identification of welding procedure and NDE coverage used on each particular weld.

Field weld identification – Field welds shall be identified on drawings using the identifier described in AWS D2.4 or ISO 2553.

Unless otherwise identified, multi-pass fillet welds may be qualified by groove welds in accordance with ISO 15614, although separate WPS's shall be submitted. Single pass fillet welds for pressure retention shall be separately qualified in accordance with ISO 15614.

Combination of WPQRs with other Contractor procedures, even if a combined operational control exists, is not permitted unless specific approval is given by the Principal.

4.7.2.1 If required by the Principal or Jurisdiction:

- All welding procedures proposed for welding on registered pressure equipment and piping shall be approved by the Jurisdiction of the state or province in which the equipment shall be registered, or if fabricated outside of the state or province in which it is registered, by a certified/authorised third party entity (i.e., ASME, TSSA).
- The WPQR/PQR documentation shall include the material certificates for the base and filler materials applied in the weld qualification test.
- Separate WPSs for fillet and groove should be submitted even in the case the procedure was qualified using groove welds.
- And if not required by the code, all welders and welding operators' performance test coupons shall be visually examined, radiographed and mechanically tested, which include bend test and subjected to corrosion testing when applicable. The mechanical test pieces shall be as per ASME/BPVC Sec IX.
- Prior to removal of test specimens, the test weld shall be subjected to the NDT defined below in the presence of the Principal or approved third party certifying authority. The NDT shall consist of the following:
  - visual examination
  - liquid penetrant or magnetic particle testing;
  - Radiographic testing; and
  - Ultrasonic testing (for welds made by GMAW, GTAW and/or FCAW only).
- The acceptance criteria shall be as stated in chapter VI of ASME B31.3 and the corresponding sections of this specification. The Principal will select the service condition to be used along with ASME B31.3 Table 341.3.2. Any weld, which fails to meet the acceptance criteria, shall not be offered for destructive testing. Visual examination of all butt welds shall include the pipe bore surfaces. For austenitic and duplex stainless steel and high Nickel austenitic alloys welds the degree of oxidation present on these surfaces following welding shall be within the visual acceptance criteria of DEP 30.10.60.31-Gen.
- After successful completion of NDT and destructive testing, the Contractor shall submit the original WPS/PQR to be used for production welding along with supporting test results for review and approval by the Principal. Production welding shall not commence until the WPS/PQR has been endorsed 'Approved for Fabrication' with the date and contract number and signed by the Principal. Only those WPS/PQR shown on the approved WPS register shall be used in production.

Documents
Document Sharing Hub

Full document details: SHELL 30.10.60.18 0

- Charpy tests beyond code requirements may be specified.
- Mechanical testing shall be delayed to account for delayed hydrogen cracks.

4.7.2.2 Materials

Specific requirements for each material group are shown in the relevant section for material types included in this specification. Other non-specified materials shall comply with usual industrial standards plus any specific design requirements as advised by purchase order.

4.7.3 Welder Qualification

4.7.3.1 All welders shall be qualified to meet the local jurisdictional code requirements. Additionally, all welders and welding operators shall be qualified in accordance with ASME/BPVC Sec IX, EN 287-1, ISO 9606-3 to ISO 9606-5 or EN 1418 as applicable or equivalent codes. If the applicable code does not specify the welder qualification validity period, it should be set to a maximum of 6 months, with possibility of extension upon review of welders' performance records. If the Principal requires, welder qualification tests shall be witnessed by the Principal.

While on site, the welders and welding operators shall be easily identifiable. This may be by:

1. A badge bearing name, photograph and identification number
2. The welder carrying a works ID pass including a photograph
3. By the Contractor maintaining a report of welder IDs including name, photograph, and welder ID number.

In the event that a welder leaves the Contractor, his welder number shall not be assigned to another welder employed on the work.

4.7.3.2 If required by the Principal, and if not required by the code, all welders and welding operators' performance test coupons shall be visually examined, radiographed and mechanically tested, which include bend test and subjected to corrosion testing when applicable. The mechanical test pieces shall be as per ASME/BPVC Sec IX.

4.7.3.3 In order to confirm the qualification by validation, a welder performance register shall be kept up-to-date by the Manufacturer. This register shall at least contain the following data:

1. Welder's name and stamp;
2. Welding position and X-ray number;
3. Data of welding inspection and the result;
4. Materials (base and consumable);
5. Geometrical data (diameter, wall thickness, etc.);
6. Reference to welding procedure specification applied.

4.7.3.4 If required by the Principal, for pressure retaining welds, for all positions only welders qualified in 6G position shall be acceptable.

4.7.4 Weld Preparation

Before start of welding, all of the materials, consumables, shielding gas shall be made traceable with identification numbers to their material test certificates. All material shall be visually inspected prior to welding to confirm freedom from mechanical damage/corrosion and confirm correct marking. Any deviations shall be reported in writing to the Principal.

Weld preparations shall be in accordance with ASME B16.25 or as-qualified in the PQR. Square butt ends are permissible below 2 mm (0.080 in) wall thickness.

Care shall be taken to avoid contamination of prepared bevel surface and surrounding area with low melting point metals such as copper, zinc or paint and markers containing zinc or chloride.

If required by the Principal, prior to preparation/fabrication/cutting of vessel wall or process piping for branch connection shall be UT tested to confirm freedom from non-acceptable

Documents
Document Sharing Hub

Full document details: SHELL 30.10.60.18 0

discontinuities. The weld foot print and 75 mm (3 in) minimum about the weld shall be examined.

4.7.4.1 Cutting and Bevelling

The equipment used for edge preparation and cleaning (e.g., plasma cutting, grinding, brushing, etc.) shall cause no detrimental metallurgical effects upon the edges to be welded. Edges shall normally be machined or bevelled by grinding. Preparation of weld edges by plasma cutting shall be done, wherever practical, with a mechanically guided torch.

Bevelling with hand-held cutting torches is not permitted except when specifically approved by the Principal. Flame cutting may be used for un-alloyed and low-alloy steels. Carbon and low-alloy steels shall be ground to bright metal approximately 3 mm (1/8 in). Cold-sheared plates of 10 mm (0.4 in) and less need not be dressed back.

For Ni-steels (> 0.5 % Ni) used for low temperature application, the edge preparation shall be done by machining or grinding. Flame cutting may be used, followed by 3 mm (1/8 in) grinding or machining. Cold shearing shall not be used.

After grinding, the weld edges shall be visually examined to ensure freedom from defects. Deep gouges and dents on the preparation surface shall be cause for rejection. Any bevelled edge that has been damaged shall be restored within the tolerances required by the welding procedure to be applied. Weld bevel restoration involving welding shall be accompanied by a qualified procedure in case of major build-up over 6 mm (1/4 in), and in case of alloy equipment shall only be permitted by approval of the Principal. Laminations identified on the bevel surface by visual examination shall be investigated by MT or PT prior to removal.

Plasma cutting should be used for high-alloy steels and clad steels followed by grinding to bright metal to a minimum of 3 mm (1/8 in).

In all cases, grinding depth could be reduced if testing shows that microstructure changes have been removed.

4.7.4.2 Spacing

Pipe or vessel containing longitudinal seams shall be separated by at least 45 ° of rotation or 150 mm (6 in), whichever is the less. Additionally, any longitudinal welds in horizontal pipes shall also be so positioned that the weld is at the upper segment of 120 ° of the pipeline.

Circumferential welds shall be separated by at least 4 times the nominal wall thickness (toe to toe).

Attachments shall be at least 2 times the nominal thickness or 40 mm (1.5 in) (toe to toe) from any weld, whichever is the smaller.

4.7.4.3 Permitted Weld Detail

All vessels, process piping and other equipment main pressure retaining joint welds shall be fabricated with full penetration butt welds unless otherwise specified.

Two-sided welding shall be applied whenever practical.

Permanent backing strips or rings shall not be used unless approved.

Temporary backing devices (e.g., ceramics, fluxes, copper backing strips, etc.) may be used provided that the chemical composition of the weld metal is not influenced by the backing strip. The strip shall be removed without damage to the surrounding material. The areas involved shall be ground flush and cleaned after removal. Welds of low-alloy ferritic steels shall be inspected by MT after the removal of the metallic backing strips or other temporary weldments, with acceptance criteria in accordance with the design code.

Fusible inserts or removable backing strips may only be used with the approval of the Principal.

4.7.4.4 Tack Welding and Clamping

Tack welding is to be carried out following the root parameters of the qualified WPS and be performed by qualified welders.

Documents
Document Sharing Hub

Full document details: SHELL 30.10.60.18 0

If tacks are applied using bars, bullets or bridges, these components shall be of the same nominal composition of the base material.

The tacks shall be equally spaced around the circumference and in sufficient number to temporarily support the loads from the process piping, equipment or fitting.

Tack welds intended to be an integral part of the root weld shall be ground to a taper edge to facilitate weld pick-up.

Cracked or badly profiled tack welds are to be completely removed prior to welding.

If line-up clamps are used without tack welding, they shall not be removed until after the root pass has been fully completed.

Permanent tack welds shall be made in accordance with all parameters of welding procedures requirements (e.g., including preheat) by qualified welders. All tack welds shall be examined in accordance with design specification. VT inspection is mandatory in all cases.

On pressure vessels with skirts, no tack welds are permitted on the inside of the skirt between the head and the skirt.

4.7.4.5 Alignment

When not specified in the piping code or purchasing specification, the permitted maximum misalignment for butt welds shall be:

Internal Pipe Diameter	**Misalignment**
= 100 mm (4 in)	1.0 mm (0.04 in)
> 100 mm(4 in)	1.6 mm (1/16 in)
External Pipe Diameter	**Misalignment**
≤ 12 mm (0.5 in)	Pipe thickness/4
> 12 mm(0.5 in)	3.0 mm (1/8 in)

For vessels and other equipment, misalignment shall be in accordance with the design standards.

Misalignments greater than these limits may be corrected by grinding or machining to a taper of 1:4 provided the wall thickness is not reduced below the minimum tolerance. Reforming of process piping vessel walls or other equipment, either hot or cold shall not be attempted without the approval of the Principal.

4.7.4.6 Identification

Welds are to be uniquely identified.

The Contractor shall demonstrate to the satisfaction of the Principal that individual welds can be positively identified at all stages of construction.

Weld identification numbers shall be marked adjacent to the weld by crayon, paint stick or similar marker prior to welding. The Contractor shall maintain records of weld number and the welder identification for each weld for inclusion in documentation package.

Particular attention shall be given to maintaining identification during grit-blasting and painting.

Similarly, welders shall mark their numbers adjacent to each weld they make.

4.7.5 Quality Assurance

The Contractor shall have an established, active and documented quality assurance system in accordance with the applicable ISO 9000 series standards as defined elsewhere in the order. These requirements shall be applied in full to the Subcontractor. The Principal may make any investigation necessary to assure compliance by the Contractor and may reject any material or work processes that do not comply with the specification. Full compliance

Documents
Document Sharing Hub

Full document details: SHELL 30.10.60.18 0

with this specification does not relieve the Contractor from the obligation to carry out additional tests at the discretion of the inspector representing the Principal in the case that serious doubt has arisen about certain quality aspects of the Work.

If required by the Principal, the Contractor is required to issue a signed statement of compliance confirming that the product has been fabricated in accordance with the requirements detailed in the purchase order.

4.7.6 Quality Conformance

Prior to commencement of work, the Contractor shall submit for the Principal's review and approval, a Quality Plan and procedural specifications, which shall be in accordance with the relevant clauses from ISO 3834 or equivalent. Fabrications shall be accepted after the Contractors submits satisfactory reporting on production welding and inspection activities.

Review of the Quality Plan by the Principal shall only indicate a general acceptance and does not relieve the Contractor of obligations to comply with the requirements of the Contract.

4.7.7 Alloy segregation

Prior to welding, the Contractor shall submit with the Quality Plan, a procedure for the segregation of all materials in the work scope and control of the tools to be used with them.

The shop fabrication of stainless steel and other non-ferrous process piping and equipment work shall be carried out in a separate area from that of Carbon-Manganese and low alloy steels. Alternatively, fabricators might submit to the Principal for approval a procedure to avoid surface contamination.

Titanium welding shall be carried out in a fully enclosed quarantined area dedicated to Titanium fabrication.

4.7.8 Inspection and Testing Plan (ITP)

Before start of welding and fabrication, the Contractor shall prepare a test package containing Inspection and Test plan and procedures to be employed in the project and shall be submitted to the Principal QCS Engineer through the project group for review and approval.

The Contractor shall maintain records showing the weld defect rates per welding procedure and per welder. For piping, rejection rates are based on the number of completed pipe welds. A rejection is considered to be any weld that requires a repair. The rejection rate will be defined as the number of repairs per number of completed welds.

For equipment, the rejection rate is based on the total linear weld distance on a per-metre (or per-foot) basis. A rejection is considered to be any weld that requires a repair within a one-metre segment. The rejection rate will be defined as the number of repair segments per total number of one-metre segments.

4.7.9 Records

Pre-Welding Documentation shall include the following:

1. Quality plan, ITP and QA/QC procedures
2. Weld plan/map
3. Approved WPS/PQR repair procedures
4. Preheating and PWHT Procedures per Section 3.9
5. Welder qualification register and identification cards copy
6. List of NDE operators and their qualification certificates
7. Copies of the Principal approved deviations
8. List of material certificates
9. List of consumable batch certificates

Documents
Document Sharing Hub

Full document details: SHELL 30.10.60.18 0

10. List of test equipments and calibration certificates
11. Approved Consumable handling procedure
12. If required by the Principal, Original copy of the WPS proposal, endorsed 'Approved for Qualification'

Add new 4.8

4.8 During Welding

4.8.1 Shop and Site Conditions / Weld protection

Field welding shall be carried out in conditions, which will not result in negative effect on weld quality. The Contractor shall propose and the Principal review the methods and precautions (e.g., heating and shelters), which shall be used to ensure good quality of welds.

Such precautions shall be applied in case of rain or snow. When the base metal temperature is below 5 °C (40 °F), both sides of the weld preparation shall be preheated to a temperature of approximately 50 °C (120 °F) or the preheat temperature prescribed in the WPS, whichever is higher.

When fabrication is to be carried out in the vicinity of plant or equipment, which may be damaged or otherwise compromised by such planned construction work, i.e., weld spatter, cutting droplets, fumes, grinding dust, etc., then adequate protection shall be provided for this ancillary plant and equipment.

The use of tent type enclosures shall be subject to approval by the Principal but such approval may be withdrawn at any time that the enclosures become inadequate or ineffective.

4.8.2 Weld Integrity and Quality

4.8.2.1 The backside of double-welded joints shall be cleaned to sound metal and examined 100 % visually, and by PT or MT as specified in the design documents or corresponding to joint efficiency.

4.8.2.2 Starts and stops - Weld starts and stops shall be situated in the fusion path, i.e., no start and stops to be located on the base metal during the final weld layer. However, finishing weld on the bevel of the base metal is acceptable. When welding is interrupted (i.e., after a power failure), the welder shall ensure full fusion and penetration into the previously deposited weld metal. Starts and stops should be staggered.

4.8.2.3 Weld surface and finish - When a smooth surface is specified in the design documentation, the fabricator shall submit a sample of a smooth weld surface, for the Purchaser's acceptance prior to the start of welding. The accepted sample shall be used as a reference for visual examination of welds that require a "smooth weld surface". Undercut is not acceptable.

All welds must be finished with a smooth profile, abrupt ridges or valleys, and they shall blend smoothly with the base material.

If fillet welds are concave, or not equal, the minimum throat size shall not be less than 0.7 x the specified leg length.

For "olet" branch fittings, the root profile shall be as specified for full penetration butt welds. The contour of completed welds shall be as shown in Figure 1 of this specification, unless the Principal advises or approves that the design requirement can be met with a smaller weld.

If restricted by the Principal, toe profile grinding or cosmetic grinding shall only be carried out when directed by the design drawings or by the Principal.

Documents
Document Sharing Hub

Full document details: SHELL 30.10.60.18 0

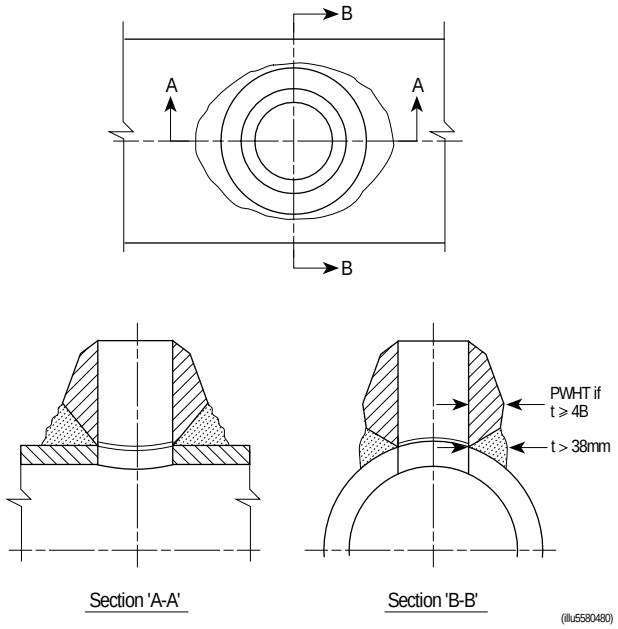

Figure 1—Weld Profile - Weldolets

4.8.2.4 Fillet welds in vibrating service, as specified in the design documents, the initial pass shall have a convex profile whereas the final weld shall have a concave profile. The minimum throat-size shall not be less than the value specified on the design documents and maximum effective weld size should be used for vibrating service. If necessary, this requirement shall be achieved by blend grinding.

4.8.3 Stray Arc Strikes

Arcs shall be struck only on fusion faces (in the fusion path) or previously deposited weld metal.

Any erroneous arc strikes shall be removed by grinding or other suitable method and the area shall be subject to surface inspection (MT or PT) to ensure continued freedom from defects. The thickness of material remaining after the removal of such defects shall be measured. If this measurement reveals loss of wall thickness below the minimum required thickness, then the item shall: 1) be replaced or 2) weld repair only if permitted with agreement of the Principal. Weld repair of such areas shall not be permitted.

The Contractor shall ensure a good earth connection and periodically examine the condition of the earth cables and attachments. Any arcing from a poor connection shall be treated as a stray arc strike. Connections shall be made to the work by stainless steel clamps. Earth cables shall not be welded to piping components.

4.8.4 Records

A daily record of all cutouts, repairable defects and repairs shall be maintained by the Contractor and copies shall be available to the Principal's representative upon request.

Detailed records of all weld numbers and pipe numbers, including weld repairs, shall be maintained by the Contractor for each and every weld as it is completed. The records shall include identification serial numbers; the position of the weld; date; qualified procedure reference number; welders' names and reference numbers and include cross references to all inspection sheets and test records. The format of the records, the information to be included and the frequency at which they shall be submitted for Principal approval shall be agreed between the Contractor and the Principal beforehand.

Documents
Document Sharing Hub

Full document details: SHELL 30.10.60.18 0

4.8.5 Calibrated Equipment For Measuring the Following Variables Shall Be Available At All Times:

1. welding current (amperage);
2. arc voltage;
3. interpass temperatures (digital);
4. oxygen content of backing gas;
5. wire feed speed;
6. travel speed (A wrist watch with a second hand or seconds display and common ruler or tape measure may be used); and,
7. shielding and backing gas flow rate.

Add new 4.9:

4.9 After Welding

4.9.1 Weld Inspection

Inspection of welds shall be carried out after final heat treatment. Inspection before final PWHT is considered a good practice but will not be enforced unless the Principal requires it. Inspection shall be done in accordance with the ITP (Inspection and Test Plan).

4.9.2 Repair of Welding Defects

If required by the Principal, repair preparation, remedial grinding and repair welding shall not commence before informing the Principal of the Contractor's proposed remedial actions.

A second attempt to repair the same weld area shall only be made by permission of the Principal. Where permission for a second repair is not given, the whole weld is to be removed.

If back purging was required for the original weld, then back purge shall be re-established if the repair excavation encroaches closer than 5 mm (0.2 in) to the inside surface of the vessel, process piping or equipment.

Welds containing repairs that were made after PWHT shall be subject to repeat PWHT in accordance with this Specification, unless otherwise approved by the Principal. If required by the Principal a separate PQR shall be prepared to demonstrate acceptable mechanical properties with extended PWHT time.

4.9.2.1 Defect Removal

Unacceptable defects in steels shall be excavated by mechanical means or carbon arc gouging to a depth agreed with the Principal followed by grinding.

Unacceptable defects in non-ferrous materials shall be excavated by mechanical means only.

The excavation shall be contoured to permit proper access for welding. For planar or other defects not detectable by visual inspection or dimensional checks, MT or PT surface inspection techniques shall be used to confirm removal of welds defects.

Materials that require preheat for welding will require adequate preheat for defect removal.

4.9.2.2 Root Repairs

Where access permits and if approved by the Principal, weld repairs to the root of a single sided weld may be permitted from the inside.

4.9.2.3 Complete Weld Metal Removal and Subsequent Re-welding

When complete removal of the defective weld metal is required in impact-tested materials or as required by the Principal, it shall also include the removal of at least 5 mm (0.2 in) of HAZ/parent metal on each side of weld. For non-impact-tested materials, cutout and re-preparation is allowed once.

Documents
Document Sharing Hub

Full document details: SHELL 30.10.60.18 0

4.9.2.4 Non-Destructive Testing

All repair welds are to be 100 % re-inspected by the methods specified for the original weld and shall extend a minimum of 50 mm (2 in) beyond either side of the repair.

4.9.2.5 Repair Procedure

The Contractor shall submit to the Principal for approval a general repair procedure detailing:

1. The method of defect excavation;
2. The shape and size of excavation prior to re-welding;
    - Cap repair
    - Mid thickness repair
    - Through thickness repair
1. All inspections prior to re-welding;
2. The WPS and WPQR, if different from original weld.

The repair WPS shall be qualified in accordance with this specification. When required by the Principal, the Qualification shall require the reproduction of a typical production repair. When required by the Principal, full penetration and partial penetration excavations shall be qualified separately. The acceptance criteria for mechanical testing of repair welds shall be the same as the original weld.

The repair WPS shall be supported by appropriate PQR. The repair PQR shall be qualified by carrying out mechanical and NDT tests – same as specified for the original PQR.

Separate WPS's might need to be prepared for the weld repair of each defect found after NDT inspection of shop or field welds as required by the applicable repair code.

4.9.2.6 Repair Limitations

When cracks are observed, the cause shall be investigated. Based on the result of the investigation, a crack repair procedure shall be developed and approved by the Principal prior the crack repair.

For partial penetration repairs, the total length of excavation shall not exceed 30 % of the weld length. For full penetration repairs, the total length of excavation shall not exceed 20 % of the weld length. A repair with dimensions greater than described above shall be considered and addressed as a highly restrained weld per 4.7.2.

For partial wall excavations, the remaining ligament adopted for the test weld shall be the smallest allowed in production.

4.9.3 Records

Post-Production Documentation

1. Certificate of Compliance
2. List of as build drawings with weld map
3. Copies of Principal approved deviations
4. NDE reports
5. Repairs carried out
6. Hydrostatic test reports
7. Any other documents as per contract requirements.

5 Welding Processes

Documents
Document Sharing Hub

Full document details: SHELL 30.10.60.18 0

5.1 Acceptable Welding Processes

Add the following to 5.1:

b): GTAW-HW (Hot wire)

Add new:

j) EBW

k) LBW

5.2 Limitations of Fusion Welding Processes

5.2.1 General

Add the following to 5.2.1:

Use of autogenous root pass (without addition of filler metal) requires a specific acceptance by the Principal.

If welding without backing gas is planned on steels having over 2¼ % Cr content, examination of the root pass for signs of excessive oxidation should be part of all acceptance tests.

5.2.2 GTAW-P

Add the following to GTAW-P:

General - All GTAW machines shall be equipped with arc starting devices (high frequency, lift arc, crater eliminating slope out control, etc.). If legislative bodies do not permit these, alternative proposals shall be submitted to the Principal for approval.

Scratch starting is strictly prohibited.

Unless otherwise approved by the Principal for welding of small-bore pipe work (DN 75 (NPS 3) and smaller, GTAW shall be used for the root pass. If required by the Principal, DN 75 (NPS 3) and smaller diameters shall be welded with GTAW throughout. As a minimum, all pipe 40 mm (1.5 in) or lower shall be welded with GTAW.

5.2.3 GMAW-S

Add the following to 5.2.3(e):

Adaptive GMAW such as STT (Surface Tension Transfer), RMD (Regulated Metal Deposition) , ESAB QSET (optimal short arc parameters settings) and CMT (Cold Metal Transfer), if used without a backing gas, should be avoided on the following equipment and piping:

1) Materials other than CS, 304 SS and 316 SS.
2) Equipment with normal operating temperatures over 450 °C (850 °F).
3) Services with high corrosion or pitting potential such as oxygen, chloride containing low pH water.
4) Services that require special quality root finish (e.g., no oxides).

These restrictions might be waived if the welding procedure qualification (mechanical and corrosion tests) shows required properties can be achieved without the use of a backing gas.

5.2.5 FCAW

Add the following to 5.2.5:

Shops that will perform FCAW shall be approved individually, based on merits, experience and track record with FCAW.

Documents
Document Sharing Hub

Full document details: SHELL 30.10.60.18 0

Add the following to 5.2.5.1:

Additionally, FCAW-S shall not be used for welding structural items to a pressure/containment boundary. It is not permitted for lifting lugs or similar lifting devices, or tank floor plates.

Add the following to 5.2.5.1(b):

The electrode specified minimum impact requirements must be demonstrated by testing in the PQR.

Add new 5.2.5.6

a) Production welding consumables shall be limited to the same manufacturer brand/trade name as used in the procedure qualification record. The fabricator QC process shall demonstrate how welding consumables are controlled.

- Electrode types identified by the consumable Manufacturer for multi-pass application should be used.
- Electrodes of type T-12 or T-5 are preferred. T-1 electrodes are acceptable, but only if required impact properties can be demonstrated. A maximum niobium (Nb) content of 0.02 % shall be specified (and reported) in consumable purchases when a T-1 type electrode is selected to avoid low toughness properties.
- Type EXXT-XX-J electrodes should be specified if the application specifies a toughness requirement 27 J (20 ft-lbs) at -40 °C (-40 °F).

b) For ferritic steels, all WPS/PQRs shall be qualified with impact testing. Impact testing of a minimum of three Charpy V-notch specimens will be performed at -18 °C (0 °F) or lower or code required temperature for testing, whichever is lower, and must demonstrate an average impact energy of 40 J (30 ft-lb), with no single specimen less than 27 J (20 ft-lb).

c) For ferritic steels in non-sour service, in addition to code requirements the WPS/PQRs shall be qualified with a hardness traverse per API RP 582, paragraph 12.6 using Vickers hardness testing equipment (ASTM E92). The maximum permissible hardness for procedure qualification of P-1 steels will be 275 HV10. For sour service, NACE MR0103 or ISO 15156 hardness requirements will apply. Other traverses may be submitted for consideration by the Principal.

d) Welder qualification – Each welder is to be qualified by mechanical testing. Mechanical testing shall also include Brinell hardness testing on each side of the welded coupon (root and cap surface) with an acceptance value of 200 HBW. Hardness results will not be accounted to pass/fail a welder but only to add data points on FCAW hardness. The Principal shall be informed if any hardness reading is greater than 200 HBW. Radiographic testing of welder coupons or production welds shall not be used in lieu of mechanical bending tests of coupons.

e) Production welding – Required hardness testing: For the FCAW process, the hardness limit for the carbon steel welds is 200 HBW. Weld metal hardness testing (HBW with Telebrineller) will be performed on the 0.5 m (1.5 ft) of the first five welds made by each welder. Welders with (excessive hardness) rejection rates higher than 2 welds should have additional training before continuing production welding. Also, the quality of the electrode and shielding gas should be reviewed. After satisfying this first testing requirement, random hardness readings will be taken on the remaining welds (measurements are done at least on 20 % of girth welds on piping or one measurement per seam on pressure vessels category A and B welds, spaced no more than 6 m (20 ft) apart). Welders with (excessive hardness) rejection rates higher than 10 % based on 20 readings (minimum) should have additional training before continuing production welding. Only one welder per section of weld seam may be tested. Production hardness testing of P-8 base metal welds is not required.

Documents
Document Sharing Hub

Full document details: SHELL 30.10.60.18 0

f) The work area shall be shielded from excessive crosswind ventilation.

g) No vertical down progression is allowed.

h) FCAW is not permitted on root pass, except when root weld is back-gouged.

i) The use of short circuit transfer mode is not permitted.

j) FCAW wire shall be stored in a dry location while still in the original package according to the following table:

Ambient Temperature °C (°F)	Maximum relative humidity (%)
15-21 (60-70)	80
21-27 (70-80)	60
27-32 (80-90)	45
32-38 (90-100)	30

Only new FCAW coils in the original, undamaged packaging can be used for pressure retaining weld welding. The electrodes should be used within a shift after opening the package. Upon opening the spool, it should be marked with the date by when it should be spent or discarded. All wires having diffusible hydrogen “H” rating shall be treated in strict conformance with the Manufacturer’s instructions. Opened electrode mounted on wire feeders should be protected against condensation. Oxidised electrodes shall be discarded.

k) FCAW wire shall be clearly identified. The identification shall be in compliance with the relevant consumable standard. Unidentified or rusty wire shall not be used.

l) FCAW welds shall be subjected to NDE examination in accordance with the P.O. specifications/Construction Class rating of a given equipment. Absolute minimum NDE coverage of FCAW-G pressure retaining welds shall correspond to the ASME/BPVC Sec VIII “spot RT” rules unless higher/more intensive examination is specified in the P.O. documents in which case such a specification shall govern.

m) When FCAW-G is proposed for welding P1 through P5 and P15 materials on equipment with design temperatures over 350 °C (650 °F) or below -29 °C (-20 °F), and when required by the Principal, special submission of evidence demonstrating prior experience and documented performance is required prior to acceptance by the Purchaser. This experience should include a list of past projects and number of completed welds and corresponding rejection rates.

n) Seamed flux-cored wires shall not be left on machines out of use for more than a shift.

5.2.6 EGW

Add new:

(d) Unless otherwise more strictly specified, all PQRs for the EGW process shall be qualified with impact testing at a temperature of -18 °C (0 °F).

(e) If multiple-pass vertical welding butt joints are made by the electrogas process, the impact specimens shall be taken from the final weld pass except when the heat input of the first pass exceeds the second pass by more than 25 %. In such cases, impact specimens from the first and final pass will be required. In either case, the HAZ specimens shall be oriented with the base of the notch parallel to the fusion line.

5.2.7 SAW

Add new 5.2.7.4:

5.2.7.4 Only fully mechanised SAW systems are permitted.

Documents
Document Sharing Hub

Full document details: SHELL 30.10.60.18 0