DEP SPECIFICATION

GAS/LIQUID SEPARATORS - TYPE SELECTION AND DESIGN RULES

DEP 31.22.05.11-Gen.

February 2012

DESIGN AND ENGINEERING PRACTICE

© 2012 Shell Group of companies
All rights reserved. No part of this publication may be reproduced, stored in a retrieval system, published or transmitted, in any form or by any means, without the prior written permission of the copyright owner or Shell Global Solutions International BV.

Documents
Document Sharing Hub

Full document details: SHELL 31.22.05.11 0

PREFACE

DEP (Design and Engineering Practice) publications reflect the views, at the time of publication, of Shell Global Solutions International B.V. (Shell GSI) and, in some cases, of other Shell Companies.

These views are based on the experience acquired during involvement with the design, construction, operation and maintenance of processing units and facilities. Where deemed appropriate DEPs are based on, or reference international, regional, national and industry standards.

The objective is to set the standard for good design and engineering practice to be applied by Shell companies in oil and gas production, oil refining, gas handling, gasification, chemical processing, or any other such facility, and thereby to help achieve maximum technical and economic benefit from standardization.

The information set forth in these publications is provided to Shell companies for their consideration and decision to implement. This is of particular importance where DEPs may not cover every requirement or diversity of condition at each locality. The system of DEPs is expected to be sufficiently flexible to allow individual Operating Units to adapt the information set forth in DEPs to their own environment and requirements.

When Contractors or Manufacturers/Suppliers use DEPs, they shall be solely responsible for such use, including the quality of their work and the attainment of the required design and engineering standards. In particular, for those requirements not specifically covered, the Principal will typically expect them to follow those design and engineering practices that will achieve at least the same level of integrity as reflected in the DEPs. If in doubt, the Contractor or Manufacturer/Supplier shall, without detracting from his own responsibility, consult the Principal.

The right to obtain and to use DEPs is restricted, and is granted by Shell GSI (and in some cases by other Shell Companies) under a Service Agreement or a License Agreement. This right is granted primarily to Shell companies and other companies receiving technical advice and services from Shell GSI or another Shell Company. Consequently, three categories of users of DEPs can be distinguished:

1) Operating Units having a Service Agreement with Shell GSI or another Shell Company. The use of DEPs by these Operating Units is subject in all respects to the terms and conditions of the relevant Service Agreement.

2) Other parties who are authorised to use DEPs subject to appropriate contractual arrangements (whether as part of a Service Agreement or otherwise).

3) Contractors/subcontractors and Manufacturers/Suppliers under a contract with users referred to under 1) or 2) which requires that tenders for projects, materials supplied or - generally - work performed on behalf of the said users comply with the relevant standards.

Subject to any particular terms and conditions as may be set forth in specific agreements with users, Shell GSI disclaims any liability of whatsoever nature for any damage (including injury or death) suffered by any company or person whomsoever as a result of or in connection with the use, application or implementation of any DEP, combination of DEPs or any part thereof, even if it is wholly or partly caused by negligence on the part of Shell GSI or other Shell Company. The benefit of this disclaimer shall inure in all respects to Shell GSI and/or any Shell Company, or companies affiliated to these companies, that may issue DEPs or advise or require the use of DEPs.

Without prejudice to any specific terms in respect of confidentiality under relevant contractual arrangements, DEPs shall not, without the prior written consent of Shell GSI, be disclosed by users to any company or person whomsoever and the DEPs shall be used exclusively for the purpose for which they have been provided to the user. They shall be returned after use, including any copies which shall only be made by users with the express prior written consent of Shell GSI. The copyright of DEPs vests in Shell Group of companies. Users shall arrange for DEPs to be held in safe custody and Shell GSI may at any time require information satisfactory to them in order to ascertain how users implement this requirement.

All administrative queries should be directed to the DEP Administrator in Shell GSI.

Documents
Document Sharing Hub

Full document details: SHELL 31.22.05.11 0

TABLE OF CONTENTS

1. INTRODUCTION 4
1.1 SCOPE 4
1.2 DISTRIBUTION, INTENDED USE AND REGULATORY CONSIDERATIONS 4
1.3 DEFINITIONS 5
1.4 CROSS-REFERENCES 8
1.5 SUMMARY OF MAIN CHANGES 8
1.6 COMMENTS ON THIS DEP 9

2. SELECTION CRITERIA FOR GAS/LIQUID SEPARATORS 10
2.1 DUTY 10
2.2 ORIENTATION 10
2.3 COMPONENTS 10
2.4 DESIGN BASE 11
2.5 SELECTION STRATEGY 13
2.6 SEPARATORS SUBJECT TO MOTION 13

3. DESIGN RULES 15
3.1 VERTICAL KNOCK-OUT DRUM 15
3.2 HORIZONTAL KNOCK-OUT DRUM 18
3.3 VERTICAL WIREMESH DEMISTER 21
3.4 HORIZONTAL WIREMESH DEMISTER 27
3.5 VERTICAL VANE-TYPE DEMISTER 31
3.6 HORIZONTAL VANE-TYPE DEMISTER 37
3.7 CYCLONE WITH TANGENTIAL INLET (CONVENTIONAL CYCLONE) 41
3.8 CYCLONE WITH STRAIGHT INLET AND SWIRLER ("GASUNIE" CYCLONE) 46
3.9 VERTICAL SEPARATOR WITH REVERSED-FLOW MULTICYCLONE BUNDLE (CONVENTIONAL MULTICYCLONE) 49
3.10 VERTICAL SEPARATOR WITH COALESCING MISTMAT/ VANEPACK AND AXIAL FLOW MULTICYCLONE DEMISTER DECK 53
3.11 HORIZONTAL SEPARATOR WITH COALESCING MISTMAT AND AXIAL FLOW MULTICYCLONE DEMISTER DECK 65
3.12 FILTER SEPARATOR 65

4. CONNECTING PIPING REQUIREMENTS 70

5. REFERENCES 74

APPENDICES

APPENDIX I NATURE OF THE FEED 75
APPENDIX II SIZING OF THE FEED AND OUTLET NOZZLES 79
APPENDIX III DESIGN OF SCHOEPENTOETER (VANE-TYPE) INLET DEVICE 81
APPENDIX IV DESIGN MARGINS FOR SEPARATOR DESIGN 82
APPENDIX V LEVEL CONTROL 83
APPENDIX VI VESSEL GEOMETRICAL RELATIONSHIPS 86
APPENDIX VII SIZING OF SEPARATOR VESSELS 90
APPENDIX VIII SEPARATION AT HIGH PRESSURE 96
APPENDIX IX VANE PACKS 99
APPENDIX X SLOSHING 101
APPENDIX XI DEBOTTLENECKING TIPS 102

Documents
Document Sharing Hub

Full document details: SHELL 31.22.05.11 0

1. INTRODUCTION

1.1 SCOPE

This DEP specifies requirements and gives recommendations for the selection and design of gas/liquid separators.

Design rules for the following types of separators are given in (3):

a) Knock-out drum (vertical and horizontal separator)

b) Wiremesh demister (vertical and horizontal separator)

c) Vane-type demister (vertical and horizontal separator)

d) Separators of the SMS family (SMS, SVS, SMSM)

e) Cyclone with tangential inlet (conventional cyclone)

f) Cyclone with straight inlet and swirler ("Gasunie" cyclone)

g) Vertical multicyclone separator with reversed-flow multicyclone bundle (conventional multicyclone separator)

h) Filter separator

NOTE The design of gas/liquid/liquid three-phase separators is excluded from the scope of this DEP; for this subject, DEP 31.22.05.12-Gen. should be consulted.

Users of this DEP should first consult Section 2 ("Selection Criteria for Gas/Liquid Separators") to familiarise themselves with the general design philosophy and the characteristics of the various separators.

After selection of the desired separator, the design rules can be obtained from (3).

Further guidance for debottlenecking of existing separators is given in (Appendix XI).

This is a revision of the DEP of the same number dated December 2007; a summary of the main changes is given in (1.5).

1.2 DISTRIBUTION, INTENDED USE AND REGULATORY CONSIDERATIONS

Unless otherwise authorised by Shell GSI, the distribution of this DEP is confined to Shell companies and, where necessary, to Contractors and Manufacturers/Suppliers nominated by them. Any authorised access to DEPs does not for that reason constitute an authorization to any documents, data or information to which the DEPs may refer.

This DEP is intended for use in facilities related to oil and gas production, gas handling, oil refining, chemical processing, gasification, distribution and supply/marketing. This DEP may also be applied in other similar facilities.

When DEPs are applied, a Management of Change (MOC) process shall be implemented; this is of particular importance when existing facilities are to be modified.

If national and/or local regulations exist in which some of the requirements could be more stringent than in this DEP, the Contractor shall determine by careful scrutiny which of the requirements are the more stringent and which combination of requirements will be acceptable with regards to the safety, environmental, economic and legal aspects. In all cases the Contractor shall inform the Principal of any deviation from the requirements of this DEP which is considered to be necessary in order to comply with national and/or local regulations. The Principal may then negotiate with the Authorities concerned, the objective being to obtain agreement to follow this DEP as closely as possible.

Documents
Document Sharing Hub

Full document details: SHELL 31.22.05.11 0

1.3 DEFINITIONS

1.3.1 General definitions

The **Contractor** is the party which carries out all or part of the design, engineering, procurement, construction, commissioning or management of a project or operation of a facility. The Principal may undertake all or part of the duties of the Contractor.

The **Manufacturer/Supplier** is the party which manufactures or supplies equipment and services to perform the duties specified by the Contractor.

The **Principal** is the party which initiates the project and ultimately pays for its design and construction. The Principal will generally specify the technical requirements. The Principal may also include an agent or consultant authorised to act for, and on behalf of, the Principal.

The word **shall** indicates a requirement.

The word **should** indicates a recommendation.

1.3.2 Abbreviations and symbols

Unless explicitly stated otherwise, all symbols used in this DEP are expressed in the units given below:

Term	Definition	Unit
A	area	m^2
Ar	Archimedes number:	
	$Ar = (\rho_L / \eta_L^2) \sqrt{\sigma^3 / \{g(\rho_L - \rho_G)\}}$	-
a	length of side, square cyclone inlet (Type 1)	m
C	specific heat	J/kg.K
D	internal diameter of vessel or large pipe	m
d	diameter of small pipe, nozzle, bubble or droplet	m
E	available clearance for Schoepentoeter	m
Eff	efficiency: $Eff = (Q_{L,out}/Q_{L,in}) * 100$	%
Fr_G	gas Froude number:	
	$Fr_G = v_G \sqrt{\rho_G / \{(\rho_L - \rho_G)gD\}}$	-
Fr_L	liquid Froude number:	
	$Fr_L = v_L \sqrt{\rho_L / \{(\rho_L - \rho_G)gD\}}$	-
f	derating factor	-
GOR	gas / oil ratio	N(ormal)m^3/m^3
g	acceleration due to gravity	m/s^2
H	height	m
h	height of vessel for liquid hold-up (to LZA(HH))	m
K	friction loss factor	-
L	length	m
LA(H)	high level pre-alarm	
LA(L)	low level pre-alarm	

Documents
Document Sharing Hub
Full document details: SHELL 31.22.05.11 0

LZA(HH)	high level trip	
LZA(LL)	low level trip	
M	mass flow rate	kg/s
max(x,y)	maximum of the values x and y	
MW	molecular weight	kg/kmol
NFA	net free area	-
NL	normal level	
n	number of vanes (Schoepentoeters), cyclones, etc.	-
P	pressure	Pa
p	pressure	Pa
Q	volumetric flow rate	m^3/s
R	radius of vane (Schoepentoeters)	m
R	cyclone scroll	m
R	gas constant (R = 8314 J/kmol.K)	J/kmol.K
s	width of split between cyclone bottom plate and wall	m
SMS	Schoepentoeter Mistmat Swirldeck	
SMSM	Schoepentoeter Mistmat Swirldeck Mistmat	
SVS	Schoepentoeter Vane Swirldeck	
T	absolute temperature	K
t	thickness	m
V	volume	m^3
v	velocity	m/s
W	width	m
w	width	m
X	clearance or distance	m
x	cyclone pressure drop coefficient	-
y	cyclone pressure drop coefficient	-

Greek symbols:

α	vane angle (Schoepentoeter)	°
α	ratio of the short and long axes of the vessel head	-
β	edge angle (Schoepentoeter)	°
ε	porosity (of wiremesh)	-
η	dynamic viscosity	Pa.s
κ	ratio of the specific heats (C_p/C_v)	-
λ	gas load factor:	
	$\lambda = (Q_G / A_G)\sqrt{\rho_G / (\rho_L - \rho_G)}$	m/s
ρ	density	kg/m^3

Documents
Document Sharing Hub

Full document details: SHELL 31.22.05.11 0

σ	gas/liquid interfacial tension	N/m
ϕ	flow parameter:	
	$\phi = Q_L / Q_G \sqrt{\rho_L / \rho_G}$	-

Subscripts:

c	cyclone
cf	filter part of candle (in filter separators)
crit50	related to droplet with 50 % chance of removal in G/L separator
crit99	related to droplet with 99 % chance of removal in G/L separator
ct	candle tube (in filter separators)
dp	drain pipe
feed	related to feed flow
fp	related to feed pipe
G	gas
hd	header
HH_H	related to control band between LZA(HH) and LA(H)
H_L	related to control band between LA(H) and LA(L)
in	related to inlet
L	liquid
L_LL	related to control band between LA(L) and LZA(LL)
m	demister (either vane pack or mistmat)
m	mixture
max	maximum
min	minimum
noz	nozzle
p	at constant pressure (as in C_p)
out	related to outlet
perfpl	perforated plate
sch	related to Schoepentoeter
sd	swirldeck
sonic	related to sonic velocity
st	swirltube
v	vane
v	at constant volume (as in C_v)
vb	vane box
vfb	related to distance between bottom plate and vortex finder in cyclones
ves	related to vessel
vo	vane entrance opening (in Schoepentoeters)
w	wire (of wiremesh)

Documents
Document Sharing Hub

Full document details: SHELL 31.22.05.11 0

wm	wiremesh
0	related to outside (nominal) diameter of inlet nozzle
1	related to feed inlet
2	related to gas outlet
3	related to liquid outlet
4	related to diameter of drip ring in cyclones
	(numbers 1 to 5 inclusive are also related to important distances/clearances in the separator vessels (see the individual layout drawings))
η	related to dynamic viscosity of liquid
ϕ	related to flow parameter

Superscript:

* density correction (e.g. in Q^*_{max})

$$Q^*_{max} = Q_{G,max}\sqrt{\rho_G / (\rho_L - \rho_G)} \qquad m^3/s$$

1.4 CROSS-REFERENCES

Where cross-references to other parts of this DEP are made, the referenced section number is shown in brackets ( ). Other documents referenced by this DEP are listed in (5.).

1.5 SUMMARY OF MAIN CHANGES

This DEP is a revision of the DEP of the same number dated December 2007. The following are the main, non-editorial changes.

Old section	**New section**	**Change**
2.3.1	2.3.1	A deflector plate is added as commonly applied inlet device.
2.6	2.6	Section is simplified by referencing to Appendix X
Table 1	Table 1	a) The overall liquid removal efficiency of the gasunie cyclone (CS) has changed from 99% to 98%. b) Also the liquid handling capacity of this cyclone for slugs has changed to moderate (C). c) For the SMSM separator the liquid removal efficiency for fine mist has changed to very high (E) d) Turndown wiremesh demister has changed to 4
3.3.2/3.4.2	3.3.2/3.4.2	For the manufacturing of wiremeshes cutting into shape is allowed given certain precautions.
3.4.2	3.4.2	For the horizontal wiremesh demister it is also allowed to apply the wiremesh horizontally in a box arrangement just upstream the gas outlet nozzle.
3.8.1	3.8.1	The slug handling capacity of the Gasunie cyclone is for small operational slugs only.

Documents
Document Sharing Hub
Full document details: SHELL 31.22.05.11 0

3.10.1.1	3.10.1.1	The separation efficiency of SMS, SMSM and SVS is specified
3.10.1.2	3.10.1.2	The purchasing policy for SMS, SMSM and SVS is specified
3.12.1	3.12.1	The range of liquid removal efficiencies of filter separators is enlarged
4	4	The L/D requirement for upstream piping to a separator has been relaxed for two-phase feed inlets with normally no liquid.
App. II	App. II	a) For two phase feed inlets with a Schoepentoeter and with normally no liquid in the feed, the design margin can be omitted. b) The impact of a higher than design inlet momentum of the feed nozzle for existing vessels is included. c) Guidelines are provided for the acceptance of a higher than design liquid velocity in the liquid outlet nozzles for existing separators.
App. IV	App. IV	Design margins may be reduced.
App. V	App. V	a) Trip level range has changed to be in line with DEP 32.80.10.10-Gen. b) Liquid holdup volumes may be reduced.
App. VII.1	App. VII.1	The degassing criterion may be omitted.
App. VII.3	App. VII.3	The defoaming criterion is described in more detail.

1.6 COMMENTS ON THIS DEP

Comments on this DEP may be sent to the Administrator at standards@shell.com, using the DEP Feedback Form. The DEP Feedback Form can be found on the main page of "DEPs on the Web", available through the Global Technical Standards web portal http://sww.shell.com/standards and on the main page of the DEPs DVD-ROM.

Documents
Document Sharing Hub

Full document details: SHELL 31.22.05.11 0

2. SELECTION CRITERIA FOR GAS/LIQUID SEPARATORS

This Section outlines various criteria and features which play a role in separator performance and selection. Table 1, at the end of this Section, summarises the relative performance of various types of separator.

2.1 DUTY

It is often necessary to separate liquid and gas phases in a certain stage of an operation or process. Since both the conditions of the wet gas stream (or more generally the gas/liquid stream) and the required efficiency may vary widely, care shall be taken in selecting a separator in order to match the specific duty. For instance, a gas/liquid separator upstream of a gas compressor would need to be very efficient, whereas in other cases a simple knock-out vessel may be sufficient if only bulk separation of the gas and liquid phases is required (e.g. upstream of a heat exchanger in which condensation will take place).

2.2 ORIENTATION

For gas/liquid separation, a vertical vessel should normally be selected for the following reasons:

- a smaller plan area is required (critical on offshore platforms);
- easier solids removal;
- liquid removal efficiency does not vary with liquid level (area in vessel available for gas flow remains constant);
- vessel volume is generally smaller.

However, a horizontal vessel should be chosen if:

- large liquid slugs have to be accommodated;
- head room is restricted;
- a low downward liquid velocity is required (for de-gassing purposes or for foam breakdown).

2.3 COMPONENTS

Following the gas/liquid flow path through the separator, the following components are identified.

2.3.1 Feed inlet

This comprises the upstream piping, inlet nozzle and inlet device (if any).

Detailed piping requirements are given in (4.).

The diameter of the inlet nozzle is a function of the feed flow rate and pressure.

Information on the nature of the feed (two-phase flow regime, maximum drop size, foaminess, etc.) is given in (Appendix I).

The criterion for nozzle sizing is that the momentum of the feed shall not exceed prescribed levels. The maximum allowable inlet momentum can be increased by fitting inlet devices.

The momentum criteria are given in (Appendix II).

The function of the inlet device is to initiate gas/liquid separation and distribute the gas flow evenly in the gas compartment of the vessel.

Commonly used inlet devices are a deflector plate, a half-open pipe or a Schoepentoeter. Rules for the design of Schoepentoeters are given in DEP 31.20.20.31-Gen.

Documents
Document Sharing Hub

Full document details: SHELL 31.22.05.11 0

2.3.2 Separator internals

After passage through the feed inlet, the gas stream will usually still contain liquid in the form of droplets. Normally further internals are required in the vessel to complete the separation process. Only when not more than bulk separation is required and the droplets are relatively large the separation internal can be omitted. By selection of a sufficiently large vessel diameter the gas velocity in the vessel can be kept low and the majority of the droplets will settle by gravity. This separation mechanism is used in knock-out vessels.

Internals are not allowed in flare knock-out drums, with the exception of a half-open pipe, a schoepentoeter inlet and, unless restricted by DEP 80.45.10.10-Gen., an outlet deflector plate. This to prevent blockage of the gas outlet in case of mechanical failure or fouling.

Separation internals are required in all other types of gas/liquid separators. The choice of internal depends on the required duty.

Options include:

- wiremesh
- vane pack (either for horizontal or vertical flow)
- (multi) cyclones
    - axial flow (e.g. "swirltubes")
    - reversed flow (tangential)
- filter candles

A combination can also be used, such as:

- wiremesh + swirltubes (in SMS)
- wiremesh + swirltubes + wiremesh (in SMSM)
- vertical-flow vane + swirltubes (in SVS)
- filter candles + vane pack or wiremesh (in two-stage filter separator)

Selection depends on the required efficiency, capacity, turndown, maximum allowable pressure drop and fouling tolerance.

2.3.3 Gas and liquid outlets

After completion of the gas/liquid separation process the two phases will leave the vessel via the gas and liquid outlet respectively. The nozzle sizing criteria are given in (Appendix II).

2.4 DESIGN BASE

2.4.1 Gas handling capacity

The separator shall be large enough to handle the gas flow rate under the most severe process conditions.

The procedure is to first determine the highest value of the volumetric gas load factor, Q^*_{max}:

$$Q^*_{max} = Q_{G,max}\sqrt{\rho_G / (\rho_L - \rho_G)} \qquad [m^3/s]$$

where $Q_{G,max}$ is the highest envisaged gas flow rate and includes a margin for surging, uncertainties in basic data, etc. and is expressed in m^3/s (actual).

This margin is typically between 15 % and 50 %, depending on the application. For the recommended margin, see (Appendix IV).

ρ_G and ρ_L are the densities of the gas and liquid phase respectively (kg/m^3). If two immiscible liquids are present in the feed and the flow rate of the lower density liquid is at

Documents
Document Sharing Hub
Full document details: SHELL 31.22.05.11 0

least 5 % vol. of the total liquid flow rate, then the density of the lighter liquid shall be used in the above formula.

The minimum required vessel cross-sectional area for gas flow, $A_{G.min}$, is determined by the following formula:

$$A_{G,min} = Q^*_{max} / \lambda_{max} \qquad [m^2]$$

where λ_{max} is the maximum allowable gas load factor, which is a measure of the gas handling capacity of the selected separator.

The gas load factor, also referred to as k-factor or Souders-Brown velocity, is defined as

$$\lambda = (Q_G / A_G)\sqrt{\rho_G / (\rho_L - \rho_G)}$$

This is a superficial gas velocity modified with a gas density scaling factor which accounts to a large extent for the effect of operating pressure.

In a vertical vessel $A_{G,min}$ is the cross-sectional area of the vessel. If a wiremesh is used, $A_{G,min}$ is the cross-sectional area of the wiremesh, which can be much smaller than the vessel's cross-sectional area. In a horizontal vessel it is the cross-sectional area above the highest liquid level LZA(HH) - see (Appendix V).

If a horizontal-flow vane pack is used, a second gas load factor is used for the sizing of the separator internal. In that case, $A_{G,min}$ is not related to the vessel but is the minimum required vane face area. (In a vertical-flow vane pack or wiremesh occupying the total cross-section of the vessel, the two load factors are identical). For more details on this load factor, see (3.5.3).

2.4.2 Flow parameter

Another commonly applied criterion for separator design is the flow parameter, ϕ, used to characterise the type of gas/liquid feed into the vessel or the relative importance of the liquid load approaching the separator internal.

$$\phi = (Q_L / Q_G)\sqrt{\rho_L / \rho_G} \qquad [-]$$

where Q_L and Q_G are the volumetric flow of the liquid and gas phase respectively (m^3/s).

2.4.3 Efficiency

The efficiency of a gas/liquid separator, Eff, is normally defined as the ratio of the liquid flow rate separated from the gas stream and the liquid flow rate in the feed entering the separator, multiplied by 100.

$$Eff = (Q_{L,out} / Q_{L,feed}) * 100\ \% \qquad [\%]$$

It should be noted, however, that if the flow parameter of the feed is very low, i.e. less than 0.001, the efficiency of the separator as defined above could be relatively low, even though in absolute terms the liquid carry-over in the gas stream is still very small.

Under such conditions it is more meaningful to describe the carry-over in absolute terms (m^3/s or kg/s) as well as the efficiency in percentage terms.

In this manual only typical efficiencies are quoted for the various separators, since the efficiency is highly dependent on the liquid droplet size distribution and liquid load at the gas/liquid separation internal.

Documents
Document Sharing Hub
Full document details: SHELL 31.22.05.11 0

2.5 SELECTION STRATEGY

To facilitate the choice of a separator type for a given application, the performance characteristics of various separators are summarised in Table 1.

The separators are compared on the following points:

Gas handling capacity:	max. capacity (gas load factor)
	turndown ratio (is ratio of maximum and minimum flow)
Liquid removal efficiency:	overall
	with respect to fine mist
	with respect to the possible flooding above the maximal load factor (flooding will cause a sharp decrease in efficiency)
Liquid handling capacity:	slugs
	droplets (overloading of separation internal)
Fouling tolerance:	sand
	sticky material
Pressure drop	

The following selection strategy is suggested:

First define the mandatory requirements which the separator shall satisfy. With the aid of Table 1, a number of separators can then be ruled out. Check, using (2.2), whether there are limitations which will rule out horizontal or vertical vessels.

For each separator out of those remaining use the appropriate part of (3). The first part of each Section gives the profile of the separator (e.g. characteristics and typical process applications). Based on these profiles, a final choice of separator can be made.

2.6 SEPARATORS SUBJECT TO MOTION

Refer to(Appendix X).

Documents
Document Sharing Hub

Full document details: SHELL 31.22.05.11 0

Table 1: Performance comparison of the various G/L separators

	VKO	HKO	VW	HW	VV1	VV2	HV	SMS	SVS	SMSM	CT	CS	VRMC	FS
Gas handling														
max. capacity (λ)	B	B	C	C	D	D	D	E	E	E	E	E	E	C
turndown (max/min flow)	∞	∞	4	4	3	3	3	10	4	10	2	3	2	∞
Liquid removal efficiency														
overall, %	90	90	> 98	> 98	> 96	> 96	> 96	> 98	> 96	> 99	> 96	> 98	> 93	50-80
with respect to fine mist	A	A	E	E	C	C	C	E	D	E	B	D	B	E
flooding above λ_{max} (Y/N)	N	N	Y	Y	*	*	*	N	N	N	N	N	Y	Y
Liquid handling capacity														
as slugs	D	E	D	E	A	D	E	D	D	D	D	C	B	-
as droplets ($Q_{L,max}$)	D	D	D	D	B	C	C	D	D	D	D	D	B	B
Fouling tolerance														
sand	E	E	B	B	**	**	**	B	C	B	E	C	C	B
sticky material	E	E	A	A	**	**	**	A	C	A	E	C	C	A
Pressure drop	A	A	B	B	B	B	B	C	C	C	D	D	D	***

A = very low
B = low
C = moderate
D = high
E = very high

∞ : Infinite
* : if double-pocket vanepack: N; for a single-pocket vanepack or in case of straight vanes: Y
** : if double-pocket vanepack: A; if single-pocket vanepack: B; if straight vanes: C
*** : depending on the degree of fouling, ranging from C to E

VKO Vertical knock-out drum (3.1)
HKO Horizontal knock-out drum (3.2)
VW Vertical wiremesh demister (3.3)
HW Horizontal wiremesh demister (3.4)
VV1 Vertical in-line separator with vane pack (3.5.5)
VV2 Vertical two-stage separator with vane pack (3.5.6)
HV Horizontal vane-type demister (3.6)
SMS Schoepentoeter-mistmat-swirldeck separator (3.10)
SVS Schoepentoeter-vane pack-swirldeck separator (3.10)
SMSM Schoepentoeter-mistmat-swirldeck-mistmat separator (3.10)
CT Cyclone with tangential inlet (conventional cyclone) (3.7)
CS Cyclone with straight inlet and swirler ("Gasunie" cyclone) (3.8)
VRMC Vertical separator with reversed-flow multicyclone bundle (conventional multicyclone) (3.9)
FS Filter separator (3.12)

Documents
Document Sharing Hub
Full document details: SHELL 31.22.05.11 0

3. DESIGN RULES

In this Section, the design rules for the various separators are given.

Unless explicitly stated otherwise, the design is to be based on maximum gas and liquid flow rates and slug volume taking into account a design margin or surge factor as specified in (Appendix IV).

Pressure drop calculations are based on maximum gas and liquid flow rates.

Table 1 summarises the performance data contained in this Section to enable a ready comparison of the various separators.

3.1 VERTICAL KNOCK-OUT DRUM

(Figure 3.1)

3.1.1 Selection criteria

Application:

– bulk separation of gas and liquid.

Characteristics:

– unlimited turndown;

– high slug handling capacity;

– liquid removal efficiency typically 90 %;

Warning: poor removal efficiency of liquid from mist

– very low pressure drop;

– insensitive to fouling.

Recommended use:

– vessels where internals have to be kept to a minimum (e.g. flare knock-out drums);

– fouling service e.g. wax, sand, asphaltenes;

– foaming service.

Non-recommended use:

– where efficient demisting of gas is required.

Typical process applications:

– vent and flare stack knockout drums;

– production separator;

– bulk separator (e.g. upstream of gas coolers);

– flash vessel.

3.1.2 Diameter

In general, the vessel diameter, D, shall satisfy:

The gas handling capacity criterion:

$$\lambda_{max} = Q^*_{max} / (\pi D^2_{min} / 4) = 0.07 \qquad [m/s]$$

or

$$D \geq 4.26 \sqrt{Q^*_{max}} \qquad [m]$$

If two immiscible liquids are present in the feed and the flow rate of the lower density liquid is at least 5 % vol. of the total liquid flow rate, then the physical properties of the lighter liquid shall be used in the gas handling criterion.

Documents
Document Sharing Hub

Full document details: SHELL 31.22.05.11 0

If the pressure is well above 90 bara, or if otherwise the surface tension is as low as $5x10^{-3}$ N/m or below, see also (Appendix VIII).

The vessel should also be large enough to enable proper disengagement of gas from the bulk liquid. The relevant criteria are discussed in (Appendix VII).

In the case of **flare knock-out drums** higher λ-values are acceptable. For more information on flare knock-out design, DEP 80.45.10.10-Gen. should be consulted.

3.1.3 Height

The total vessel height (tangent to tangent) is given by:

$$H = h + X_1 + X_2 + X_3 \qquad [m]$$

where

- h = the height required for liquid hold-up (Appendix V) calculated from the bottom tangent line [m],
- X_1 = the clearance between the highest liquid level LZA(HH) (Appendix V) and the inlet device [m],
- X_2 = the height required for the feed nozzle [m];
- X_3 = the clearance between the inlet device and the top tangent line [m].

– for a half-open pipe inlet device:

- X_1 = 0.3 D with a minimum of 0.3 m;
- X_2 = d_1, see Figure 3.1 [m];
- X_3 = 0.9 D with a minimum of 0.9 m.

– for a Schoepentoeter inlet device:

- X_1 = 0.05 D with a minimum of 0.15 m;
- X_2 = d_1 + 0.02 [m];
- X_3 = 0.6 D with a minimum of 0.6 m.

3.1.4 Nozzles

The feed nozzle should preferably be fitted with a half-open pipe inlet device with its opening directed downwards to benefit from the initial Gas/Liquid separation of the inlet device..

However, the use of a Schoepentoeter may also be considered, in particular if D > 1.5 m.

The choice between Schoepentoeter and half-open pipe will be a trade-off between the required separation efficiency of the inlet internal (in knock-out drums not a critical issue) and costs.

For the sizing of the gas and liquid outlet nozzles, see (Appendix II).

For flare knock-out drums, smaller nozzles are acceptable. For flare knock-out design DEP 80.45.10.10-Gen. should be consulted.

3.1.5 Pressure drop

The pressure differential between inlet and vapour outlet is

$$P_{in} - P_{out} = 0.5\ \rho_m\ v^2_{m,in} + 0.22\ \rho_G\ v^2_{G,out} \qquad [Pa]$$

The subscript "m" refers to the gas/liquid mixture entering the gas/liquid separators. The definitions of ρ_m and $v_{m,in}$ are given in (Appendix II). If a Schoepentoeter inlet is fitted, the Schoepentoeter pressure drop shall also be included, see (Appendix II).

Documents
Document Sharing Hub
Full document details: SHELL 31.22.05.11 0

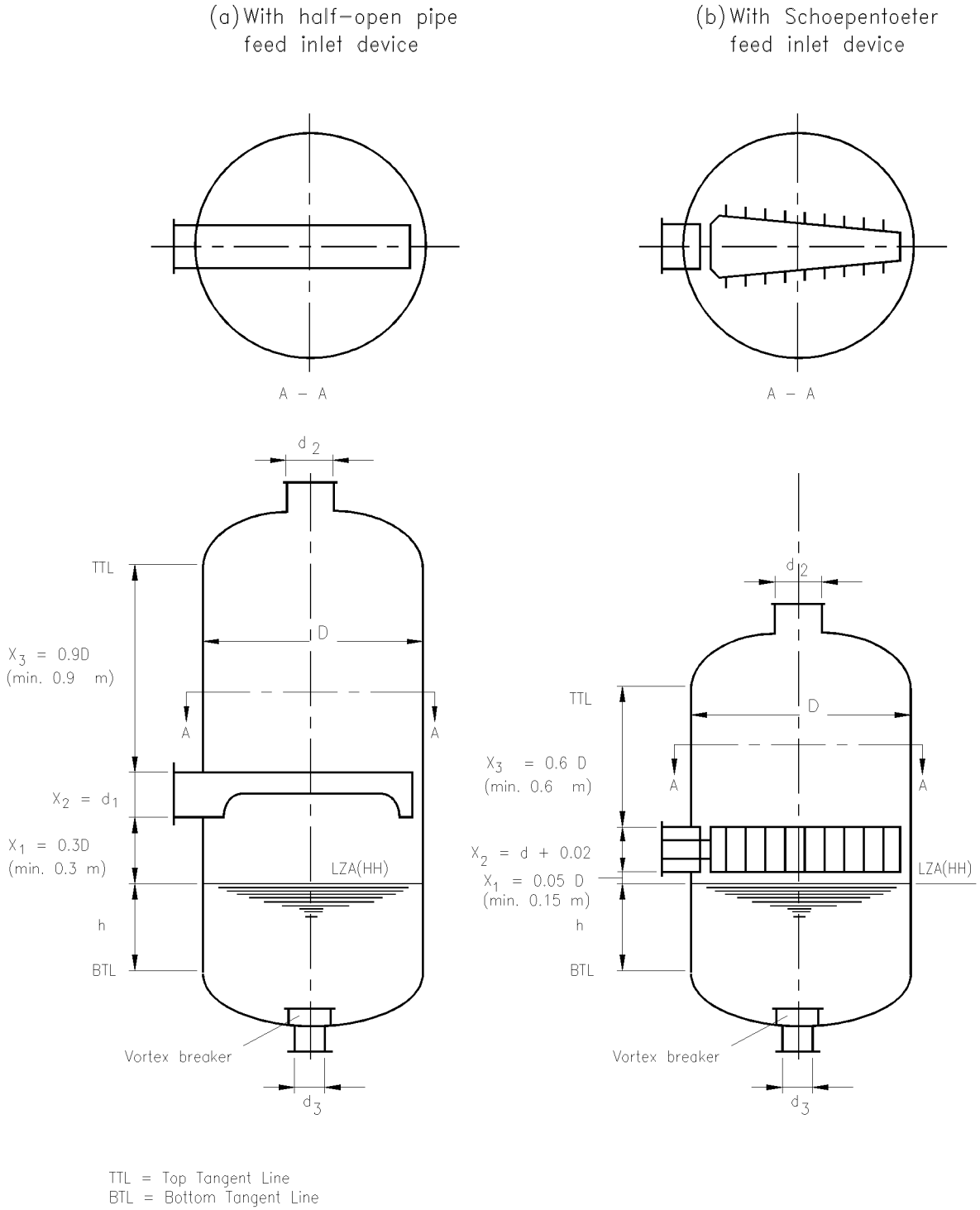

Figure 3.1 Vertical knock-out drum

Documents
Document Sharing Hub
Full document details: SHELL 31.22.05.11 0

3.2 HORIZONTAL KNOCK-OUT DRUM

(Figure 3.2)

3.2.1 Selection criteria

Application:

- bulk separation of gas and liquid.

Characteristics:

- can handle large liquid fractions;
- unlimited turndown;
- very high slug handling capacity;
- liquid removal efficiency typically 90 %

  Warning: poor removal efficiency of liquid from mist;
- very low pressure drop;
- insensitive to fouling.

Recommended use:

- vessels where internals have to be kept to a minimum and where there are height limitations;
- slug catchers;
- fouling service, e.g. wax, sand, asphaltenes;
- for foaming or very viscous liquids.

Non-recommended use:

- where efficient demisting of gas is required.

Typical process applications:

- vent and flare stack knock-out drums;
- production separator for low gas/oil ratio (GOR);
- bulk separator;
- slug catcher.

3.2.2 Diameter and length

For horizontal knock-out drums, the vessel diameter is derived after considering the requirements for both gas and liquid.

Vertical cross-sectional area for gas flow

In general, the minimum vessel cross-sectional area for gas flow, $A_{G,min}$, follows from

$$\lambda_{max} = Q^*_{max} / A_{G,min} = 0.07 \qquad [m/s]$$

in which $A_{G,min}$ is taken above the LZA(HH) liquid level (see Appendix V).

This can be rewritten as: $A_G \geq Q^*_{max} / 0.07$ [m^2]

If two immiscible liquids are present in the feed and the flow rate of the lower density liquid is at least 5 % vol. of the total liquid flow rate, then the physical properties of the lighter liquid shall be used in the gas handling criterion.

If the pressure is well above 90 bara, or if otherwise the surface tension is as low as $5x10^{-3}$ N/m or below, see also (Appendix VIII).

Documents
Document Sharing Hub

Full document details: SHELL 31.22.05.11 0

In the case of flare knock-out drums higher λ-values are acceptable. For more information on flare knock-out design, DEP 80.45.10.10-Gen. should be consulted.

Liquid-full section of the vessel: the separator size

For the design of the liquid-full section of the vessel and the selection of the separator size the procedure, outlined in (Appendix VI), shall be followed, with the restrictions that only liquid levels LZA(HH) up to 80 % of the vessel diameter are allowed and the height of the gas cap shall be 0.3 m minimum. This will result in a vessel tangent-to-tangent length/diameter ratio of between 2.5 and 6.

The vessel diameter shall be sufficiently large to accommodate the feed inlet device. Also, sufficient distance (> 0.15 m) shall be available between the bottom of the inlet device and LZA(HH).

The vessel should also be large enough to enable proper disengagement of gas from the bulk liquid. The relevant criteria are discussed in (Appendix VII). A typical minimum diameter for a horizontal knock-out drum in non-foaming service is 1.0 m and in foaming service 1.25 m.

3.2.3 Nozzles

The diameters of the nozzles may be taken as equal to the inlet and outlet piping sizes provided that the nozzle design criteria are satisfied.

For the sizing of the nozzles, see (Appendix II).

The feed nozzle should be located at the top or in the head of the vessel. The use of a feed inlet device is optional.

A half-open pipe or Schoepentoeter could be used.

When a half-open pipe or Schoepentoeter is used, at least 0.15 m shall be left between the bottom of the inlet device and LZA(HH). (See Figure 3.2.). If a half-open pipe is used, its last section should be horizontal, pointing opposite to the flow direction in the vessel and with its opening directed upwards.

The gas outlet nozzle shall be located on the top of the vessel and should be fitted with a gas outlet deflector (see Figure 3.2). Design requirements for flare knock-out drum outlet deflectors are different from Figure 3.2

NOTE: Design requirements for flare knock-out drum outlet deflectors differ from Figure 3.2. See DEP 80.45.10.10-Gen.

In flare knock-out drums smaller nozzles are acceptable. For the design of flare knock-out drums DEP 80.45.10.10-Gen should be consulted.

3.2.4 Pressure drop

The pressure differential between inlet and vapour outlet is

$$P_{in} - P_{out} = 0.5\ \rho_m v^2_{m,in} + 0.22\ \rho_G v^2_{G,out} \qquad \text{[Pa]}$$

Documents
Document Sharing Hub

Full document details: SHELL 31.22.05.11 0

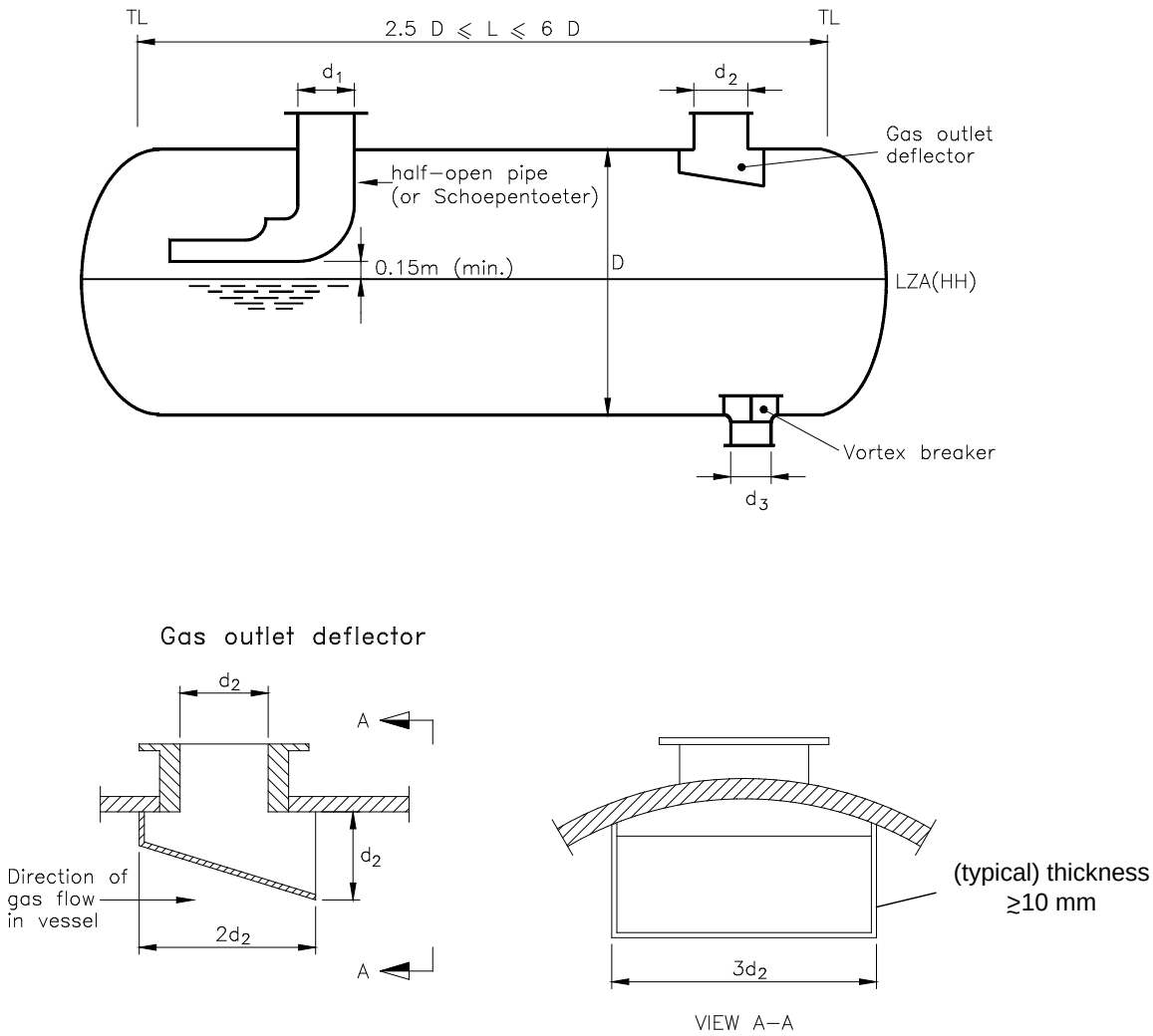

Figure 3.2 Horizontal knock-out drum

Documents
Document Sharing Hub
Full document details: SHELL 31.22.05.11 0

3.3 VERTICAL WIREMESH DEMISTER

(Figures 3.3 and 3.4)

3.3.1 Selection criteria

Application:

- demisting of gas.

Characteristics:

- high turndown ratio (factor 4);
- high slug handling capacity;
- liquid removal efficiency > 98 %;
- sensitive to fouling;
- low pressure drop.

Recommended use:

- for demisting service with a moderate liquid load in form of droplets;
- where slug handling capacity may be required.
- for compressor suction scrubbers, in non-fouling service, provided that precautions are taken to prevent the disengagement of loose wire cuttings.

Non-recommended use:

- fouling service (wax, asphaltenes, sand, hydrates)
- for viscous liquids where de-gassing requirement determines vessel diameter

Typical process applications:

- production/test separator (non-fouling, moderate GOR);
- inlet/outlet scrubbers for glycol contactors;
- inlet scrubbers for gas export pipelines;
- for small diameter and/or low pressure vessels, where extra costs of e.g. vane or SMS internals cannot be justified.

3.3.2 Demister mat specification and installation

MANUFACTURING

The demister mat shall be made of **knitted** wire formed to give the correct shape. If cutting is required to achieve the required size and shape, then proper manufacturing techniques shall be applied to not compromise the quality of the wiremesh by creating too many loose parts. It is also recommended to finish the cut surfaces of the wiremesh (e.g. by wrapping with layer(s) of wiremesh), herewith reducing the risk that loose parts get released from the wiremesh during installation and operation and potentially damage downstream equipment.

Demister mats are normally **stainless steel.**

The mistmat shall have:

- a free volume of at least 97 % (ε = 0.97)
- a wire thickness,d_w, between 0.23 mm and 0.28 mm.

The thickness of a horizontal mat in a vertical vessel is normally 0.1 m.

Documents
Document Sharing Hub

Full document details: SHELL 31.22.05.11 0

MOUNTING

The wire mat shall be placed between two grids having a free area of at least 97 %. The mat shall be fastened in such a way that it cannot be compressed when being mounted.

To maximise the mistmat area available for demisting, the support rings should have an open structure as shown in standard drawing S 20.030.

If the rings do not have an open structure, a correction has to be incorporated in the gas handling capacity calculations (see Section 3.3.4). The effective vessel diameter in the calculations shall then be taken as the inner support ring diameter. Reference is made to the requisition sheet DEP 31.22.05.93-Gen. and Standard Drawings S 20.028, S 20.029 and S 20.030.

In a vertical vessel, perforated plates shall NOT be mounted upstream of the demister (in an attempt to minimise gas flow maldistribution over the wiremesh), since during operation liquid will accumulate between the plate and the mat, resulting in a deterioration of demister performance.

3.3.3 Process considerations

3.3.3.1 Turndown

In practical terms, the turndown of a vertical demisting vessel should not become a constraint. The efficiency of the demister mat will decrease at gas flows less than around 40 % of the design limit if the droplet size distribution of the liquid entrained in the gas flow remains the same. This is evident in Figure 3.4; it should be noted that this is the efficiency of the wiremesh only, the total efficiency of a wiremesh demister will be higher because of separation by the inlet device, etc.

Nevertheless, as the gas flow rate decreases (in the absence of chokes etc.), the dispersion in the flow line upstream of the separator is less pronounced, resulting in larger droplets which are easier for the wiremesh to intercept. This effect will offset the loss in efficiency caused by the decrease of the gas flow rate.

This means in practice a turndown ratio of 4.

3.3.3.2 Efficiency

The liquid removal efficiency of a wiremesh separator is highly dependent on the liquid droplet size distribution and liquid load at the demister mat.

Figure 3.4 demonstrates the effect of average droplet size on efficiency.

For design purposes, an overall liquid removal efficiency of greater than 98 % can be assumed for a correctly sized vertical demisting vessel (this includes the pre-separation by the feed inlet device).

3.3.4 Diameter

The vessel diameter, D, shall satisfy

the gas handling capacity criterion:

$$\lambda_{max} = Q^*_{max}/(\pi D^2_{min} / 4) = 0.105 f_\eta f_\phi \qquad [m/s]$$

or

$$D \geq 3.48 \sqrt{Q^*_{max} /(f_\eta\ f_\phi)} \qquad [m]$$

f_η is the derating factor allowing for the viscosity of the liquid phase

if $\eta_L > 0.001$ Pa.s: $f_\eta = (0.001/\eta_L)^{0.04}$,

if $\eta_L \leq 0.001$ Pa.s, then $f_\eta = 1$

f_ϕ is the derating factor related to the flow parameter at the face of the wiremesh, ϕ_{wm}

$f_\phi \approx 1/(1+10\ \phi_{wm})$ if $\phi_{wm} \leq 0.1$

Documents
Document Sharing Hub

Full document details: SHELL 31.22.05.11 0

In practice, ϕ_{wm} will not exceed 0.1.

ϕ_{wm} will be a function of the flow parameter of the feed entering the vessel and the K.O. capacity of the feed inlet device.

- If a Schoepentoeter is used, assume $\phi_{wm} = 0.05\phi_{feed}$

  (i.e. assumed efficiency of Schoepentoeter is 95 %)

- If a half-open pipe is used, assume $\phi_{wm} = 0.2\ \phi_{feed}$

  (i.e. assumed efficiency of half-open pipe is 80 %)

If two immiscible liquids are present in the feed and the flow rate of the lower density liquid is at least 5 % vol. of the total liquid flow rate, then the physical properties of the lighter liquid shall be used in the gas handling criterion.

For a support ring for the demister mat designed in accordance with Standard Drawing S 20.030, the width of the ring can be neglected and the diameter D calculated by the above formula will be the vessel internal diameter. For other types of ring the vessel diameter is the calculated D plus twice the ring width.

If the pressure is well above 90 bara, or if otherwise the surface tension is as low as $5x10^{-3}$ N/m or below, see also (Appendix VIII).

The vessel should also be large enough to enable proper disengagement of gas from the bulk liquid. The relevant criteria are discussed in (Appendix VII).

3.3.5 Height

Let h be the height of vessel required for liquid hold-up (Appendix V). Then the total tangent-to-tangent vessel height (see Figure 3.3) is:

$$H = h + X_1 + X_2 + X_3 + t_{wm} + X_4 \qquad [m]$$

where

t_{wm} = thickness of demister mat, usually 0.1 m

- and either (with Schoepentoeter as inlet device):

  X_1 = 0.05 D with a minimum of 0.15 m

  X_2 = d_1 + 0.02 m

  with d_1 = internal diameter of inlet nozzle

  X_3 = d_1 with a minimum of 0.3 m

  X_4 = 0.15 D with a minimum of 0.15 m

- or (with half-open pipe as inlet device):

  X_1 = 0.3 D with a minimum of 0.3 m

  X_2 = d_1 [m]

  X_3 = 0.45 D with a minimum of 0.9 m

  X_4 = 0.15 D with a minimum of 0.15 m

3.3.6 Nozzles

If the vessel diameter is less than 0.5 m, the feed nozzle should be fitted with a half-open pipe inlet device, with the opening directed downwards.

For vessel diameters of 0.5 m and larger and inlet nozzle sizes of 0.15 m and larger, a Schoepentoeter inlet device is recommended.

Documents
Document Sharing Hub

Full document details: SHELL 31.22.05.11 0

For the sizing of the feed nozzle, see (Appendix II).

For the design of Schoepentoeters, see DEP 31.20.20.31-Gen.

For the sizing of the gas and liquid outlet nozzles, see (Appendix II).

3.3.7 Pressure drop

The pressure differential between inlet and vapour outlet is

$$P_{in} - P_{out} = 0.5\rho_m v^2_{m,in} + 0.22\rho_G v^2_{G,out} + \Delta p_{wm} \qquad \text{[Pa]}$$

It is recommended that the pressure drop across the mistmat (Δp_{wm}) be calculated as follows:

$$\Delta p_{wm} = 200\,(\rho_L - \rho_G)\,\lambda^2\,t_{wm} \qquad \text{[Pa]}$$

$$= 20\,000\,\lambda^2\,t_{wm} \qquad \text{[mm process liquid]}$$

($\approx$ 22 mm at maximum gas load conditions if mat thickness t_{wm} = 0.1 m)

NOTE: This is the wet pressure drop. The dry pressure drop across the mistmat is 50 % of this value. In the above recommended formula for the pressure drop an averaged correction for the liquid loading of the mistmat has been taken into account.

Documents
Document Sharing Hub

Full document details: SHELL 31.22.05.11 0

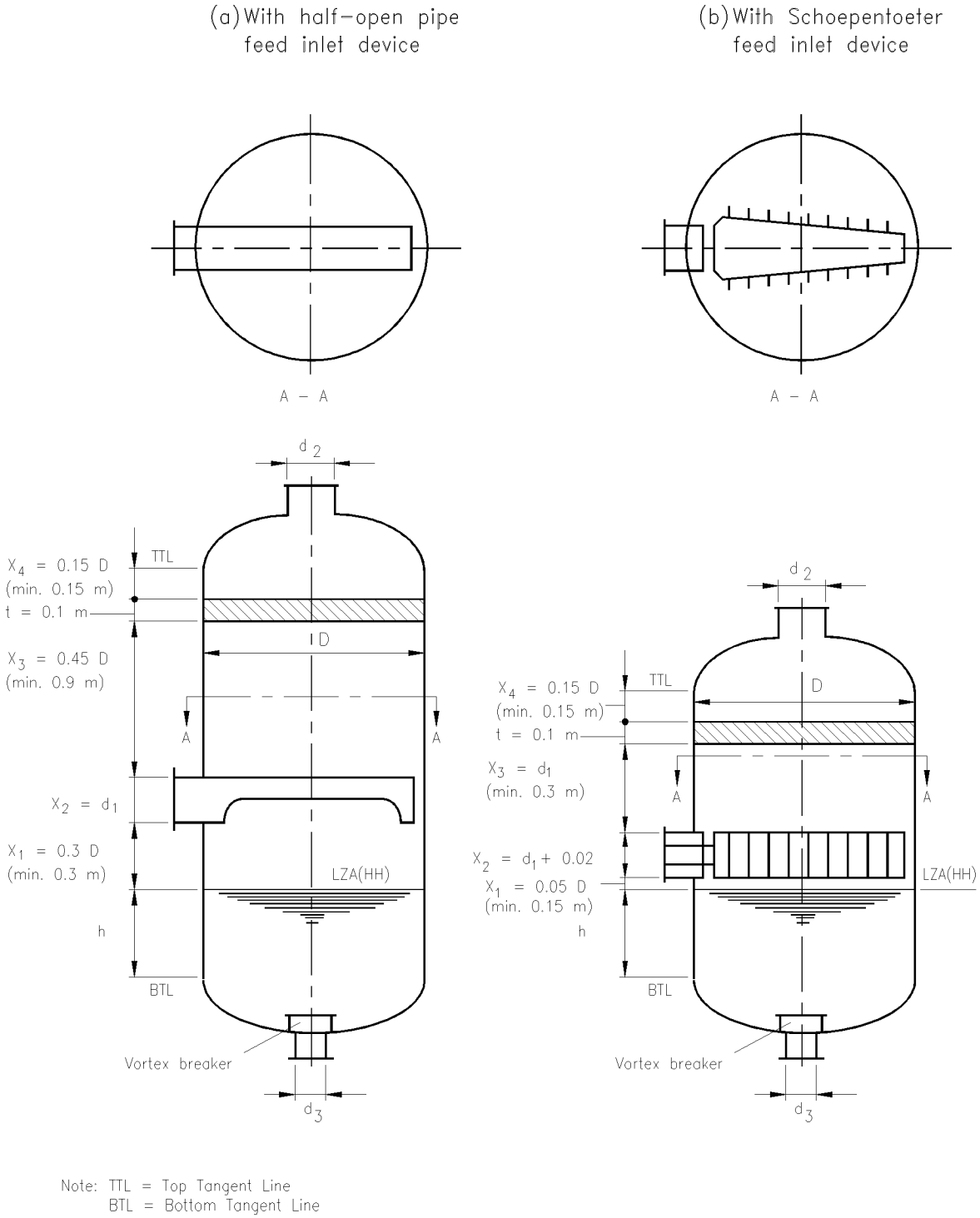

Figure 3.3 Vertical wiremesh demister

Documents
Document Sharing Hub
Full document details: SHELL 31.22.05.11 0

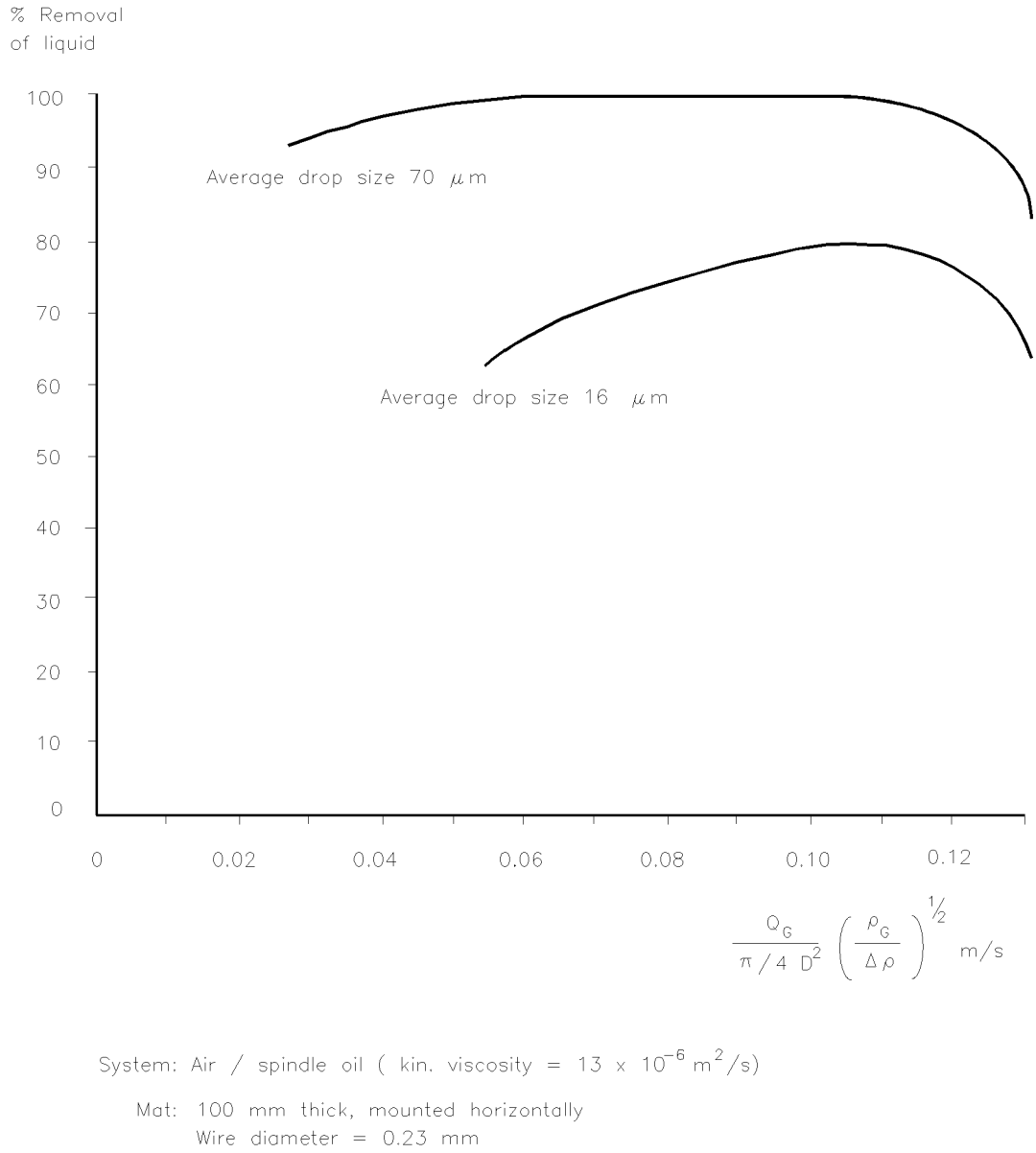

Figure 3.4 Typical efficiency curves for demister mats

Documents
Document Sharing Hub

Full document details: SHELL 31.22.05.11 0

3.4 HORIZONTAL WIREMESH DEMISTER

(Figure 3.5)

3.4.1 Selection criteria

Application:

- demisting of gas where a high liquid handling capacity is required.

Characteristics:

- high turndown ratio (factor 4);
- very high slug handling capacity;
- liquid removal efficiency > 98 %;
- sensitive to fouling;
- low pressure drop.

Recommended use:

- typically for demisting service with a high liquid load and a low GOR;
- applied where slug handling capacity may be required;
- for viscous liquids where liquid de-gassing requirement determines vessel diameter;
- in situations where head room is restricted;
- for foaming liquids.

Non-recommended use:

- Fouling service (wax, asphaltenes, sand).

Typical process applications:

- production/test separator for low GOR
- applications with height limitations.

3.4.2 Demister mat specifications

MANUFACTURING

The demister mat shall be made of **knitted** wire formed to give the correct shape. If cutting is required to achieve the required size and shape, then proper manufacturing techniques shall be applied to not compromise the quality of the wiremesh by creating too many loose parts. It is also recommended to finish the cut surfaces of the wiremesh (e.g. by wrapping with layer(s) of wiremesh), herewith reducing the risk that loose parts get released from the wiremesh during installation and operation and potentially damage downstream equipment.

Demister mats are normally **stainless steel.**

The mistmat shall have:

- a free volume of at least 97 % ($\varepsilon = 0.97$)
- a wire thickness,d_w, between 0.23 mm and 0.28 mm.

A vertical mistmat in a horizontal vessel shall have a thickness of at least 10 % of the vessel diameter with a minimum of 0.15 m.

MOUNTING

The vertical demister mat shall extend from the top of the vessel to 0.10 m below LZA(LL). The area between the mat and the bottom of the vessel shall allow free passage of the full liquid flow (Figure 3.5).

Documents
Document Sharing Hub

Full document details: SHELL 31.22.05.11 0

The distance between the Schoepentoeter or the horizontal section of the half-open pipe and the front face of the demister mat shall be at least D.

The distance between the downstream side of the outlet nozzle and the rear face of the demister mat shall be at least 0.5D. Both distances are also indicated in Figure 3.5.

The wire mat shall be placed between two grids having a free area of at least 97 %. The mat shall be fastened in such a way that it cannot be compressed when being mounted.

To maximise the mistmat area available for demisting, the support rings should have an open structure as shown in standard drawing S 20.030.

If the rings do not have an open structure, a correction has to be incorporated in the gas handling capacity calculations (see Section 3.3.4). The effective vessel diameter in the calculations shall then be taken as the inner ring diameter. Reference is made to the requisition sheet DEP 31.22.05.93-Gen. and Standard Drawings S 20.028, S 20.029 and S 20.030.

In horizontal vessels with a gas outlet nozzle located at the top of the vessel, wiremeshes can also be applied horizontally in a box like structure just below the gas outlet nozzle. For such lay out the wiremesh surface area is sized by using the design guidelines as described for the vertical wiremesh demister (section 3.3). A critical detail is that the (top of the) wiremesh is installed at sufficient distance ($> 0.35 d_{gas\ outlet} > 0.22D$) from the gas outlet nozzle for proper functioning of the device.

3.4.3 Diameter and length

For horizontal wiremesh demisters, the vessel diameter is derived after considering the requirements for both gas and liquid.

Vertical cross-sectional area for gas flow

The minimum vessel cross-sectional area for gas flow, $A_{G,min}$, is taken above the LZA(HH) liquid level (see Appendix V) and is computed as follows:

$A_{G,min} = Q^*_{max} / \lambda_{max}$ [m^2]

and $\lambda_{max} = 0.09\ f_\eta f_\phi$ [m/s]

so $A_G \geq Q^*_{max} / (0.09\ f_\eta f_\phi)$ [m^2]

f_η is the derating factor accounting for the viscosity of the liquid phase

if $\eta_L > 0.001$ Pa.s: $f_\eta = (0.001/\eta_L)^{0.04}$,

if $\eta_L \leq 0.001$ Pa.s, then $f_\eta = 1$

f_ϕ is the derating factor related to the flow parameter at the face of the wiremesh, ϕ_{wm}

$f_\phi \approx 1/(1+10\ \phi_{wm})$ if $\phi_{wm} \leq 0.1$

In practice, ϕ_{wm} will not exceed 0.1.

ϕ_{wm} will be a function of the flow parameter of the feed entering the vessel and the K.O. capacity of the feed inlet device.

- If a Schoepentoeter is used, assume $\phi_{wm} = 0.05\phi_{feed}$
- If a half-open pipe is used, assume $\phi_{wm} = 0.2\ \phi_{feed}$

If two immiscible liquids are present in the feed and the flow rate of the lower density liquid is at least 5 % vol. of the total liquid flow rate, then the physical properties of the lighter liquid shall be used in the gas handling criterion.

Documents
Document Sharing Hub
Full document details: SHELL 31.22.05.11 0

WARNING: The gas handling capacity of the horizontal wiremesh demister is lower than that of its vertical counterpart, the main reason being that the gravity force is less effective in preventing the droplets from migrating through the mistmat and reaching the downstream face.

If the pressure is well above 90 bara, or if otherwise the surface tension is as low as $5x10^{-3}$ N/m or below, see also (Appendix VIII).

Liquid-full section of the vessel: the separator size

For the design of the liquid-full section of the vessel and the selection of the separator size the procedure, outlined in (Appendix VI), shall be followed, with the restrictions that only liquid levels LZA(HH) up to 60 % of the vessel diameter are allowed and that the height of the gas cap shall be 0.6 m minimum.

The procedure will lead to a vessel tangent-to-tangent length/diameter ratio of between 2.5 and 6.

The vessel should also be large enough to enable proper disengagement of gas from the bulk liquid. The relevant criteria are discussed in (Appendix VII).

A typical minimum diameter for a horizontal wiremesh demister is 1.3 m in non-foaming service and 1.6 m in foaming service.

3.4.4 Nozzles

A Schoepentoeter inlet device is recommended for horizontal wiremesh demisters.

The feed nozzle may be located at the vessel head or vessel top, as indicated in Figure 3.5. For process purposes, the top location is slightly preferable. In both cases the distance between the Schoepentoeter and the mistmat shall be at least one vessel diameter.

For the sizing of the feed nozzle, see (Appendix II).

For the design of Schoepentoeters, see DEP 31.20.20.31-Gen.

The gas outlet shall be located on the top of the vessel and should be fitted with a gas outlet deflector. See also Figure 3.2 for details of the deflector.

For the sizing of the gas and liquid outlet nozzles, see (Appendix II).

3.4.5 Pressure drop

The pressure differential between inlet and vapour outlet is

$$P_{in} - P_{out} = 0.5\rho_m v^2_{m,in} + 0.22\rho_G v^2_{G,out} + \Delta p_{wm} \qquad \text{[Pa]}$$

It is recommended that the pressure drop across the mistmat (Δp_{wm}) be calculated as follows:

$$\Delta p_{wm} = 200\,(\rho_L - \rho_G)\lambda^2\, t_{wm}$$

$$= 20\,000\,\lambda^2\, t_{wm} \qquad \text{[mm process liquid]}$$

($\approx$ 24 mm at maximum gas load conditions if mat thickness t_{wm} = 0.15 m)

NOTE: This is the wet pressure drop.

The dry pressure drop across the mistmat is 50 % of this value. In the formula recommended above for the pressure drop an averaged correction for the liquid loading of the mistmat has been taken into account.

Documents
Document Sharing Hub

Full document details: SHELL 31.22.05.11 0

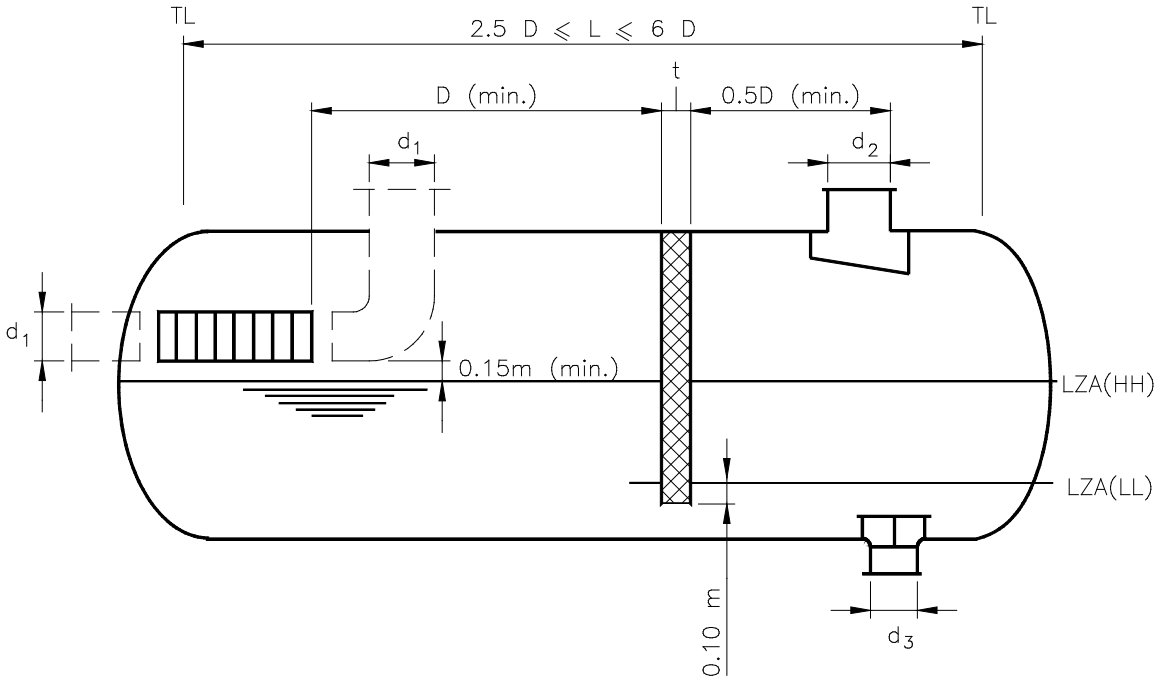

Figure 3.5 Horizontal wiremesh demister

Documents
Document Sharing Hub
Full document details: SHELL 31.22.05.11 0

3.5 VERTICAL VANE-TYPE DEMISTER

Types:

1. IN-LINE SEPARATOR WITH HORIZONTAL FLOW VANE PACK (Figure 3.6a)
2. TWO-STAGE SEPARATOR WITH VERTICAL FLOW VANE PACK (Figure 3.6c)

3.5.1 Selection criteria

Application:

– demisting of gas.

Characteristics:

– liquid removal efficiency > 96 %;

– moderate turndown ratio (factor 3);

– suitable for slightly fouling service (straight or single-pocket vanes only);

– not suitable for pressures above 70 bar;

– robust design;

– sensitive to liquid slugs (in-line separator cannot handle slugs at all).

Recommended use:

– typically for demisting service;

– in-line separator to be used only with relatively low flow parameter ($\phi_{feed} < 0.01$);

– two-stage separator to be used if $\phi_{feed} \geq 0.01$;

– attractive for slightly fouling service (straight or single-pocket vanes only);

– may be used where demister mats may become plugged, e.g. waxy crudes, sulphur recovery units.

Non-recommended use:

– heavy fouling service (heavy wax, asphaltenes, sand, hydrates);

– for viscous liquids where de-gassing requirement determines vessel diameter;

– the in-line vertical flow vane pack separator shall not be used where liquid slugging may occur or where $\phi_{feed} \geq 0.01$;

– if pressure exceeds 70 bar (typically for gas densities > 70 kg/m^3), due to the consequent sharp decline in liquid removal efficiency and insufficient turndown.

Typical process applications:

– demisting vessels with slightly fouling service.

– compressor suction scrubbers – where vane packs are preferred to demister mats since their construction is more robust. In view of the limited separation efficiency of vanepacks, this application should be limited to operating pressures well below 50 bar.

3.5.2 Vane pack specification

Until recently, the vertical vane-type demister vessels available on the market were normally equipped with a horizontally flowed-through vane pack. Vertically flowed-through vane packs are also available, and these are preferred in two-stage vane separators because they make better use of the available space and are less prone to gas flow maldistribution.

Basically, there are three types of vane elements: the straight (no-pocket), single-pocket and double-pocket type. In vertically flowed-through vane packs only double-pocket vanes

Documents
Document Sharing Hub

Full document details: SHELL 31.22.05.11 0