DEP SPECIFICATION

REFRACTORY LININGS FOR SULPHUR RECOVERY UNITS (CLAUS AND SCOT)

DEP 64.24.32.11-Gen.

February 2011
(DEP Circular 48/11 has been incorporated)

DESIGN AND ENGINEERING PRACTICE

DEM1

© 2011 Shell Group of companies
All rights reserved. No part of this publication may be reproduced, stored in a retrieval system, published or transmitted, in any form or by any means, without the prior written permission of the copyright owner or Shell Global Solutions International BV.

Documents
Document Sharing Hub

Full document details: SHELL 64.24.32.11 0

PREFACE

DEP (Design and Engineering Practice) publications reflect the views, at the time of publication, of Shell Global Solutions International B.V. (Shell GSI) and, in some cases, of other Shell Companies.

These views are based on the experience acquired during involvement with the design, construction, operation and maintenance of processing units and facilities. Where deemed appropriate DEPs are based on, or reference international, regional, national and industry standards.

The objective is to set the recommended standard for good design and engineering practice to be applied by Shell companies in oil and gas production, oil refining, gas handling, gasification, chemical processing, or any other such facility, and thereby to help achieve maximum technical and economic benefit from standardization.

The information set forth in these publications is provided to Shell companies for their consideration and decision to implement. This is of particular importance where DEPs may not cover every requirement or diversity of condition at each locality. The system of DEPs is expected to be sufficiently flexible to allow individual Operating Units to adapt the information set forth in DEPs to their own environment and requirements.

When Contractors or Manufacturers/Suppliers use DEPs, they shall be solely responsible for such use, including the quality of their work and the attainment of the required design and engineering standards. In particular, for those requirements not specifically covered, the Principal will typically expect them to follow those design and engineering practices that will achieve at least the same level of integrity as reflected in the DEPs. If in doubt, the Contractor or Manufacturer/Supplier shall, without detracting from his own responsibility, consult the Principal.

The right to obtain and to use DEPs is restricted, and is typically granted by Shell GSI (and in some cases by other Shell Companies) under a Service Agreement or a License Agreement. This right is granted primarily to Shell companies and other companies receiving technical advice and services from Shell GSI or another Shell Company. Consequently, three categories of users of DEPs can be distinguished:

1) Operating Units having a Service Agreement with Shell GSI or another Shell Company. The use of DEPs by these Operating Units is subject in all respects to the terms and conditions of the relevant Service Agreement.

2) Other parties who are authorised to use DEPs subject to appropriate contractual arrangements (whether as part of a Service Agreement or otherwise).

3) Contractors/subcontractors and Manufacturers/Suppliers under a contract with users referred to under 1) or 2) which requires that tenders for projects, materials supplied or - generally - work performed on behalf of the said users comply with the relevant standards.

Subject to any particular terms and conditions as may be set forth in specific agreements with users, Shell GSI disclaims any liability of whatsoever nature for any damage (including injury or death) suffered by any company or person whomsoever as a result of or in connection with the use, application or implementation of any DEP, combination of DEPs or any part thereof, even if it is wholly or partly caused by negligence on the part of Shell GSI or other Shell Company. The benefit of this disclaimer shall inure in all respects to Shell GSI and/or any Shell Company, or companies affiliated to these companies, that may issue DEPs or advise or require the use of DEPs.

Without prejudice to any specific terms in respect of confidentiality under relevant contractual arrangements, DEPs shall not, without the prior written consent of Shell GSI, be disclosed by users to any company or person whomsoever and the DEPs shall be used exclusively for the purpose for which they have been provided to the user. They shall be returned after use, including any copies which shall only be made by users with the express prior written consent of Shell GSI. The copyright of DEPs vests in Shell Group of companies. Users shall arrange for DEPs to be held in safe custody and Shell GSI may at any time require information satisfactory to them in order to ascertain how users implement this requirement.

All administrative queries should be directed to the DEP Administrator in Shell GSI.

Documents
Document Sharing Hub

Full document details: SHELL 64.24.32.11 0

TABLE OF CONTENTS

1. **INTRODUCTION** 4
1.1 SCOPE....4
1.2 PROCESS DESCRIPTION AND BASIC REQUIREMENTS 4
1.3 DISTRIBUTION, INTENDED USE AND REGULATORY CONSIDERATIONS 4
1.4 DEFINITIONS 5
1.5 CROSS-REFERENCES 6
1.6 SUMMARY OF MAIN CHANGES....7
1.7 COMMENTS ON THIS DEP 7
1.8 DUAL UNITS....7

2. **SELECTION OF REFRACTORY LININGS**....9
2.1 GENERAL 9
2.2 ANCHORS FOR REFRACTORY LININGS 10
2.3 LINING DESIGN OF SPECIFIC EQUIPMENT 11

3. **INSTALLATION OF REFRACTORY LININGS**....23
3.1 GENERAL 23
3.2 ANTI-CORROSIVE COATING....23
3.3 MINIMUM LINING REQUIREMENTS....23
3.4 ANCHOR WELDING PROCEDURES 24
3.5 INSTALLATION OF CERAMIC FERRULES IN REFRACTORY MATRIX FROM UNSHAPED MATERIALS ON TUBE SHEETS 24

4. **QUALITY CONTROL** 27

5. **REPAIRS OF REFRACTORY LININGS** 28
5.1 GENERAL 28

6. **DRYING, FIRING AND HEATING UP OF REFRACTORY LINED EQUIPMENT** ...29
6.1 GENERAL 29
6.2 HEAT UP CONSIDERATIONS DURING COMMISSIONING 29
6.3 DRY OUT OF LININGS AFTER MAJOR REPAIR OR REPLACEMENT....30
6.4 DRY OUT OF TUBESHEET MATRIX AND PERIMETER FILL LININGS AFTER REPLACEMENT 31
6.5 COOLING DOWN 31

7. **REFERENCES** 32

APPENDICES

APPENDIX 1 TYPICAL DETAILS FOR MAN WAYS 35

APPENDIX 2 SPECIFICATION FOR MONOLITHIC REFRACTORY MATERIALS FOR TUBESHEET INSTALLATIONS 38

APPENDIX 3 SPECIFICATION FOR CERAMIC FERRULES....40

Documents
Document Sharing Hub

Full document details: SHELL 64.24.32.11 0

1. INTRODUCTION

1.1 SCOPE

This DEP specifies requirements and gives recommendations for the equipment of Claus and SCOT sulphur recovery units.

Typical refractory lined equipment are:

- claus burner (main burner) and main reaction chamber,
- the inlet tube sheet and outlet channel of the waste heat boiler,
- line burner(s),
- reactors,
- condensers,
- SCOT burner and reaction chamber,
- incinerator,
- flue ducting and stack.

This specification DEP is applicable to new and existing equipment within the sulphur recovery unit.

Not included in this DEP are specifications for sulphur storage pit and tanks, reference is given to DEP 34.19.20.31-Gen. and DEP 30.48.60.12-Gen for specifications for internally-lined reinforced concrete pits below ground level.

DEP 64.24.32.30-Gen. and DEP 44.24.90.31-Gen. are generally applicable for refractory materials, and referenced throughout this DEP however this DEP shall supersede any other standard or DEP specification of linings for SRU equipment.

This DEP contains mandatory requirements to mitigate process safety risks in accordance with Design Engineering Manual DEM 1 – Application of Technical Standards.

This is a revision of the DEP of the same number dated December 1999; see (1.6) regarding the changes.

1.2 PROCESS DESCRIPTION AND BASIC REQUIREMENTS

1.2.1 Operating conditions

Specific operating conditions are not included under lining design as they relate to thermal requirements from each individual SRU to achieve total asset life relative to normal affects from operation such as metal corrosion. The Principal in each application shall provide specific ambient and process parameters such as normal, normal high and upset temperatures suitable to allow for specific layer thickness design from properly selected material types or for the use of external shielding, insulation or inner protective coatings.

All layer thickness and material selections given in this DEP are minimum standard considering general operating conditions.

1.2.2 Typical layout

A typical layout for a SRU is shown in Figure 1 for illustration purposes only of primary components of the SRU outlined in this DEP.

1.3 DISTRIBUTION, INTENDED USE AND REGULATORY CONSIDERATIONS

Unless otherwise authorised by Shell GSI, the distribution of this DEP is confined to Shell companies and, where necessary, to Contractors and Manufacturers/Suppliers nominated by them. Any authorised access to DEPs does not for that reason constitute an authorization to any documents, data or information to which the DEPs may refer.

This DEP is intended for use in facilities related to Sulphur Recovery Units. This DEP may also be applied in other similar facilities.

When DEPs are applied, a Management of Change (MOC) process should be implemented; this is of particular importance when existing facilities are to be modified.

Documents
Document Sharing Hub

Full document details: SHELL 64.24.32.11 0

If national and/or local regulations exist in which some of the requirements could be more stringent than in this DEP, the Contractor shall determine by careful scrutiny which of the requirements are the more stringent and which combination of requirements will be acceptable with regards to the safety, environmental, economic and legal aspects. In all cases the Contractor shall inform the Principal of any deviation from the requirements of this DEP which is considered to be necessary in order to comply with national and/or local regulations. The Principal may then negotiate with the Authorities concerned, the objective being to obtain agreement to follow this DEP as closely as possible.

1.4 DEFINITIONS

1.4.1 General definitions

The **Contractor** is the party that carries out all or part of the design, engineering, procurement, construction, commissioning or management of a project or operation of a facility. The Principal may undertake all or part of the duties of the Contractor.

The **Manufacturer/Supplier** is the party that manufactures or supplies equipment and services to perform the duties specified by the Contractor.

1 The **Refractory Manufacturer** is the party that manufactures the refractory products and/or ancillaries for supply to the Refractory Contractor. The Refractory Manufacturer has primary responsibility for material design properties, manufacturing quality control at the manufacturing site, construction design requirements and specific procedures such as those for site product mixing, installation and curing, drying, firing and start-up. The refractory Contractor may undertake duties of the Refractory Manufacturer only if they are the actual manufacturer of the product.

2 The **Refractory Contractor** is the party that undertakes all, or part of, the construction design, engineering, material procurement and application of refractory products on behalf of the Manufacturer where different. The Refractory Contractor has responsibly for the quality control of supplied products along with workmanship quality control as part of the total quality system.

The **Principal** is the party that initiates the project and ultimately pays for it. The Principal may also include an agent or consultant authorised to act for, and on behalf of, the Principal.

The word **shall** indicates a requirement.

The capitalised term **SHALL [PS]** indicates a process safety requirement.

The word **should** indicates a recommendation.

1.4.2 Specific definitions

Term	Definition
applicator	party or individual that applies or installs the refractory linings
bricks	standard sized shapes typically pressed from high alumina or fireclay mixtures provided pre-fired with specified geometry and physical property characteristics, also called **shaped refractories**
Delegated Technical Authority	A **Delegated Technical Authority** is a person who has received delegated authority to approve Derogations from the Process Safety requirements.
Derogation	A **Derogation** is an authorized variance or exemption from a Process Safety requirement, with specified conditions.
matrix wall	refers to tubesheet linings consisting of specially designed ferrules requiring no matrix unshaped filler material between tube pitches.
monolithic lining	refers to linings formed from unshaped materials (plastic, castable) without joints other than for designed panels or for control of cracks and expansion.
MRC	main reactor chamber, also called **reaction furnace**

Documents
Document Sharing Hub

Full document details: SHELL 64.24.32.11 0

Term	Definition
refractory materials, products and linings	dense, insulating, and/or special composite refractory materials made from non-metallic mineral components.
SCOT	Shell Claus Offgas Treating process.
shapes	typically non-standard shapes from unshaped materials manufactured in controlled "shop" environment and pre-fired to stability for the intended application.
unshaped refractory	refractory material supplied in unfired state ready for installation into monolithic construction also called **monolithic refractories.**
WHB	waste heat boiler.
SRU	sulfur recovery unit.

1.5 CROSS-REFERENCES

Where cross-references to other parts of this DEP are made, the referenced section number is shown in brackets. Other documents referenced by this DEP are listed in (7).

Cross reference to industry standards for the testing or refractory physical properties are given in Table 1.

Table 1 Primary and alternative material test standards

Properties	Alternative standard	Primary standard
Permanent Linear Change	EN 1402-6, ISO 2477, ISO 2478	ASTM C113, ASTM C179, API 936
Porosity	ISO 5017	ASTM C20
Thermal Conductivity	ISO-8894-1, ISO-8894-2, EN 993-15, EN 993-14, EN 1402-5	ASTM C201, C417, C1113
Density (true & bulk)	EN 1402-6, EN 993-1, EN 1094-4, ISO-5016, 5017	ASTM C134, C830, C914, API 936
Cold Crushing Strength	EN 1402-6, EN 993-5, EN 1094-5, ISO-8895, 10059-1, 10059-2	ASTM C133
Modulus of Rupture	EN 1402-6, EN 993-6, EN 993-7 ISO-5014	ASTM C133
Hot Modulus of Rupture	ISO-5013, EN 993-7, EN 1402-6	ASTM C583
Refractoriness under Load	ISO-1893 EN 993-8, EN 1402-6	ASTM C832 ASTM C16
Abrasion Resistance	ISO-16282	ASTM C704
Chemical Analysis	ISO-12677, ISO-21587-1 & 2 & 3	Use alternative
Sampling and Preparation	EN 1402-5	ASTM C862 C865, API 936

NOTE: Testing in North America will be generally be performed in accordance with primary standards. However, in case of non-availability of test facility for completion in accordance with primary standards, such as for EU supplied materials, alternative test standards may be used with the consent of the Principal.

Documents
Document Sharing Hub

Full document details: SHELL 64.24.32.11 0

1.6 SUMMARY OF MAIN CHANGES

This DEP is a revision of the DEP of the same number dated December 1999. The DEP has had undergone a significant revision, so it remains impractical to summarise all the changes here. Changes in general include the removal of all non-specification content from the original DEP of the same number; the addition of applicable ASTM or other standards and elimination of specifications for acid resistant materials for sulfur storage pits and tanks.

1.7 COMMENTS ON THIS DEP

Comments on this DEP may be sent to the Administrator at standards@shell.com, using the DEP Feedback Form. The DEP Feedback Form can be found on the main page of "DEPs on the Web", available through the Global Technical Standards web portal http://sww.shell.com/standards and on the main page of the DEPs DVD-ROM.

1.8 DUAL UNITS

Amended per
Circular 48/11
Dual units have been incorporated throughout this DEP.

This DEP contains both the International System (SI) units, as well as the corresponding US Customary (USC) units, which are given following the SI units in brackets. When agreed by the Principal, the indicated USC values/units may be used.

Documents
Document Sharing Hub

Full document details: SHELL 64.24.32.11 0

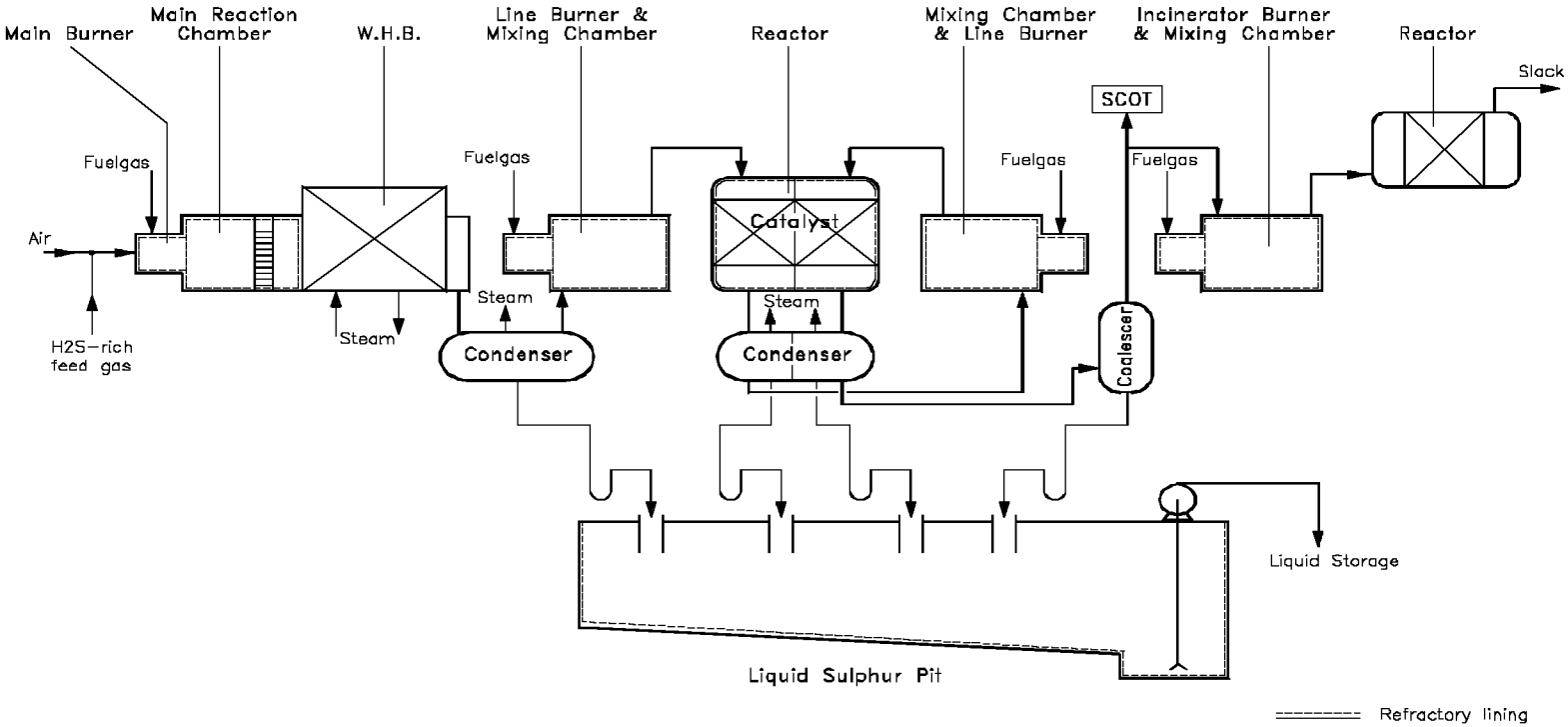

Figure 1 Typical layout of a Claus unit

Documents
Document Sharing Hub
Full document details: SHELL 64.24.32.11 0

2. SELECTION OF REFRACTORY LININGS

2.1 GENERAL

Standard shaped commercially available refractory bricks shall be used wherever possible. Unshaped refractory materials in monolithic engineered construction proven capable of equivalent performance may be used when approved by the Principal.

For every individual application where the normal or normal high operating temperature can cause major damage to the bare steel structure such as in any burner chamber and the main reaction chamber, the Principal SHALL [PS] approve all refractory lining material selections, by whichever Contractor is responsible for material selection.

Reference is given to DEP 64.24.32.30-Gen. and DEP 44.24.90.31-Gen. for material specifications referenced in (2.3) and not listed in Appendix 2 or Appendix 3 of this DEP.

2.1.1 Performance conditions

All refractory lining layers shall be designed to resist attack by any sulphur components and or reducing environments either on the process side layer (hot face) or penetrating through the lining to internal layers together with the water vapour which is typically present due to the process conditions. These include but are not limited to ammonia vapor condensate, sulphur vapour condensate, sulphur vapour, high temperature hydrogen, and sub stoichiometric operation of combustion equipment.

The minimum specification range for shell vessel temperature shall be 20°C (36°F) above the calculated dew point of the flue gas with minimum ambient conditions. In conditions specified by the Principal where main burner of reaction furnace is oxygen enriched lining materials and layer design shall be made suitable to withstand higher temperature and chemical environment.

The Fe_2O_3 content of all hot face layers shall be less than 1% by weight.Phosphate bonded high alumina plastic refractory should not be used without proper heat treatment or where average mean temperature will be above 1480°C (2696°F).

2.1.2 Brick linings

Insulating and dense refractory bricks shall be in accordance with DEP 44.24.90.31-Gen. Standard arch and key bricks shall be used in circular or curved areas. The use of non-standard size or shaped bricks shall be avoided. For brick linings high temperature mortar shall be used which shall be non-slagging and chemically compatible with the operational conditions and or bricks used in the construction. The mortar grade for hot face layer bricks may be of air or heat setting type depending on the operating temperature and supplied either wet for immediate use or dry for field mixing. For the insulating back-up brick linings wet or dry air setting and chemical bonding mortar shall be used.

2.1.3 Monolithic linings

Monolithic linings shall be installed from proper selection of unshaped refractory materials installed with proper refractory construction design for anchoring, green support, expansion and construction joints for crack control and localized stress relief. In addition monolithic linings shall also be cured dried and initially fired in accordance with Manufacturers project specific documented procedures.

2.1.4 Anti-corrosive protection of equipment

An anti-corrosive coating will not be required if the steel temperature will always be above the calculated dew point of the flue gas if lower temperatures are anticipated, an internal coating shall be insoluble in water applied that is capable of withstanding the process conditions. If applied, the coating shall be permanent, viscous and non-oxidising, normally be bituminous and shall be suitable for a maximum continuous temperature of 205°C (400°F). To avoid the use of internal coatings external insulation may be used.

To prevent excessive cooling and or thermal shocks of non-insulated (exterior) lined equipment, or affects from drastic ambient seasonal temperature exposure a shield (Figure 2) shall be fitted around the shell with a suitable gap in between. An exhaust vent or

Documents
Document Sharing Hub
Full document details: SHELL 64.24.32.11 0

other suitable ventilation shall be placed on the top of the shield with suitably sized open bottom to provide adequate ventilation.

For high temperature process vessels such as burners and the MRC where shielding is employed means of visual observation (hinged panels) or exterior mounted thermocouples should be used.

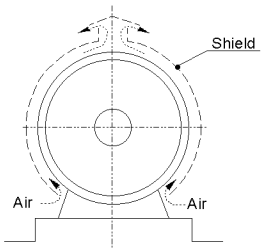

Figure 2 Protective shield

2.2 ANCHORS FOR REFRACTORY LININGS

Anchors are not required for linings of circular vessels properly made from properly selected brick or shapes in appropriate brick construction. Steel supports may be used in place of complex brick configurations where large openings and changes of plane leave the potential for critical stress or brick dislodgement. Wherever intended for use they shall be properly illustrated for approval by the Principal on construction design drawings.

Anchors are required for all monolithic lining construction from unshaped refractory materials. All layouts and details shall be illustrated on construction design drawings and approved by the Principal.

2.2.1 Ceramic anchor brick

Ceramic anchor bricks shall be used in monolithic construction from unshaped plastic refractory construction greater than 130mm (5-¼ in) and in castable construction where metallic anchor temperatures exceed maximum allowable metal temperatures. Supporting steel attachments for ceramic anchor fixing to the shell shall be provided in the appropriate steel grade suitable for the interface temperatures and chemical environment of the application. Allowance shall be made in the anchor attachment design for independent expansion and contraction of the lining and steel shell to be lined and for proper cutting of ceramic anchors.

Ceramic anchor material grade specifications are generally found in DEP 44.24.90.31-Gen for the appropriately class of bricks. For the specialized application of anchoring “tensile strength” should be incorporated into the quality requirements for ceramic anchor tiles. Ceramic anchor pitches to be determined based on specific details of construction used, material properties and Contractor success based experience. If not otherwise specified ceramic anchor pitches shall not exceed 300mm squares for flat overhead construction or 380mm for flat vertical or cylindrical walls and floors all measured on the steel shell.

2.2.2 Metallic anchors

Metallic anchor material grades, pitches and dimensions are generally defined in DEP 44.24.90.31-Gen. and DEP 64.24.32.30-Gen. and if not otherwise specified, all material grades for anchors for any SRU application shall be type ss310 and welded with ss309 filler.

For monolithic linings from castable construction, V-anchors should be used for single refractory layers, and special shaped V-anchors or Y-anchors should be used for dual-layer refractory linings. The Contractor may propose the use of Y-anchors for thicker single layers from castable materials to better facilitate spacing requirements.

Documents
Document Sharing Hub
Full document details: SHELL 64.24.32.11 0

2.2.3 Metallic anchors for tube sheets

The placement of anchors on tubesheets shall be governed by the space available between the boiler tube pitch layouts.

There shall be at least 6 mm (¼ in) clearance between anchor tips and ferrules. If specified by the Principal, the tips of anchors may be coated with a thin coat of shellac or equivalent varnish.

2.3 LINING DESIGN OF SPECIFIC EQUIPMENT

With the technical proposals, the Contractor shall submit the thermal design calculations, indicating steady state temperature profiles, refractory brand and thicknesses. Where unshaped materials are used in monolithic construction thermal design calculations shall include profiles indicating temperatures at anchor and support systems to verify alloy selection and use. Design calculation reports should include all assumptions and conditions of the calculation generally as outlined in ASTM C680.

The refractory design shall be respective of both the thermal and mechanical requirements of the refractory service and not based on vessel steel cold face requirements alone. Where hot thermal characteristics such as hot load deformation are critical, source information shall be supplied in the quality documentation for approval by the Principal.

Standard refractory shaped bricks used in brick construction shall be in standard bonding alignment and or with best practise construction design details including but not limited to proper use of anchorage and support, proper opening and intersection construction, proper cuts at change of plane, and with proper expansion allowance and cold joints.

Where monolithic construction from unshaped materials is used construction design shall include but not be limited to all requirements such as for anchoring, temporary support as required for dry out or curing, construction stress control and expansion joints. For typical construction design details, reference is made to Appendix 1. Need for more details in Appendix 1?

For every individual application where the normal or upset operating temperature can cause major damage to the bare steel structure such as in any burner chamber and the main reaction chamber, the Principal SHALL [PS] approve all refractory lining layer and construction design details, by whichever Contractor is responsible for each or both respective design requirements.

2.3.1 Main reaction chamber and Claus burner

A typical layout of a main reaction chamber, claus burner WHB inlet chamber, WHB inlet tubesheet and WHB outlet channel is shown in Figure 3.

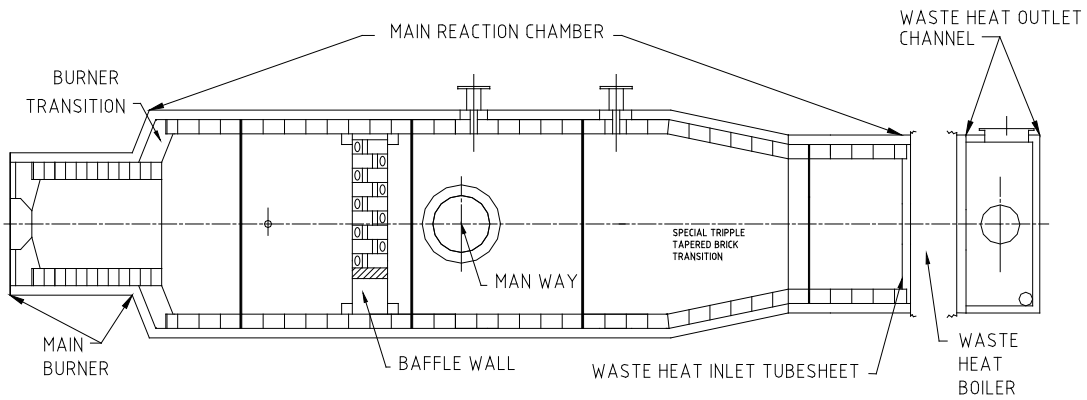

Figure 3 Typical layout of a main reaction chamber

Documents
Document Sharing Hub
Full document details: SHELL 64.24.32.11 0

2.3.1.1 Claus Main burner

Based on normal operating conditions, the refractory lining of a Claus burner consists of two layers, as shown in Table 2.

In the case of ammonia destruction or oxygen enrichment hot face lining of the barrel shall be minimum HA 90 brick minimum 230 mm (9 in) thick.

Table 2 Refractory materials for Claus burner

Lining	°C	°F	Thickness		Group
			mm	inches	
Barrel					
Hot face	1600	2910	Min 152 mm	Min 6 in	HA65, Sillimanite/Andalusite-based-HA90 corundum based
Backup	1400	2550	Min 115 mm	Min 4 -½ in	minimum Group IFB 140 L (2600 IFB)
Back Wall					
Hot face	1600	2910	Varies	Varies	specially shaped bricks prefabricated and pre-fired blocks or a combination of pre-fired shapes (minimum HA58-HA65, Sillimanite/Andalusite-based) against the air-nose and from unshaped materials in engineered anchored monolithic construction thereafter.
Back up	1400	2550	Min 115 mm	Min 4 -½ in	Group IFB 140 L (2600 IFB)
Optional: 2nd back-up	1250	2280	Min 63 mm for IFB, board 25mm	Min 2 -½ in for IFB, board 1 in	1250 °C (2282°F) Group IFB125 L (2300IFB) or HT insulating board (2 ply or ship lap overlapping)

NOTE: The above temperatures are typical only.

2.3.1.2 Claus main burner air nose

In order to prevent distortion of the stainless steel burner combustor cone supplied by some burner Vendors, stress relieving cuts should be provided In order to prevent premature failure of featheredged refractory formed by stainless steel burner combustor cone material adjacent to cone should be from fired bricks or shapes or high temperature castable products cast in place.

2.3.1.3 Main reaction chamber (MRC)

For normal operational conditions, the refractory lining of the main reaction chamber consists of a minimum of two layers, as shown in Table 3.

In the case of ammonia destruction or oxygen enrichment hot face lining of the barrel shall be minimum HA 90 brick minimum 230mm (9 in) thick, and if specified by the Principal or burner manufacturer may require “mixing” internals.

Documents
Document Sharing Hub

Full document details: SHELL 64.24.32.11 0

Table 3 Refractory materials for main reaction chamber

Lining	°C	°F	Thickness		Group
			mm	inches	
Main lining					
Hot face	1600	2910	Min152 mm	Min 6 in	HA 65, Sillimanite/Andalusite-based –HA90 corundum based
Backup	1400	2550	Min115 mm	Min 4 -½ in	Minimum Group IFB 140 L (2600 IFB)
Internals					
Baffle wall or Choke Ring	1600	2910	230 mm (width)	9 in (width)	minimum HA 70, Mullite based (special creep resistant)

NOTE: The above temperatures are typical only.

2.3.1.4 Baffle wall or choke ring

When specified the baffle wall shall have a minimum thickness of 230 mm (9 in) and shall have a free passage area of between 2.5 and 3.5 times the free passage area of the tube sheet. *confirm* Circular or rectangular baffle wall blocks may be used provided the stability of the wall and proper flue gas flow is assured. Illustrations of typical baffle wall layouts are given in Figure 4 and Figure 5

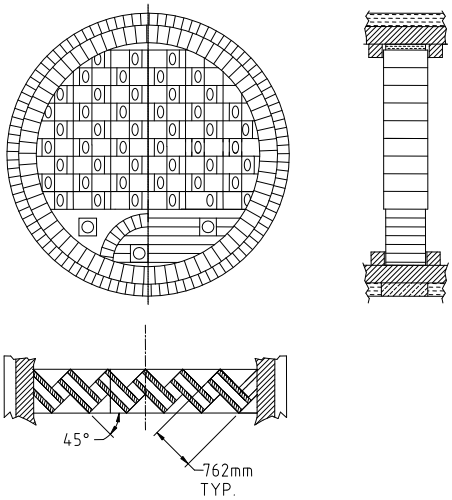

Figure 4 Typical herringbone baffle wall layout from precast and brick shapes

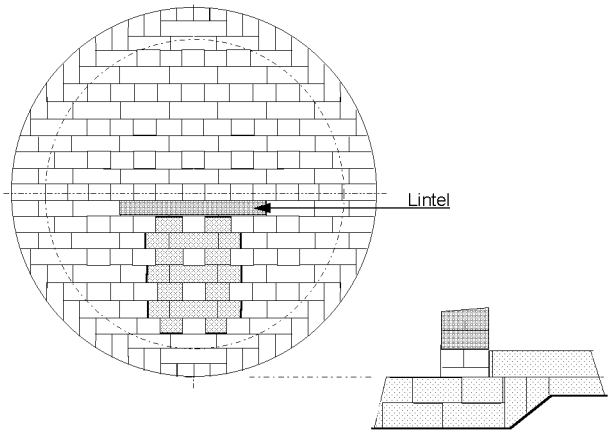

Figure 5 Typical straight pattern baffle wall layout from standard brick shapes

Documents
Document Sharing Hub
Full document details: SHELL 64.24.32.11 0