SMPTE ST 2036-3:2012
Revision of
SMPTE ST 2036-3:2010

SMPTE STANDARD

Ultra High Definition Television — Mapping into Single-link or Multi-link 10 Gb/s Serial Signal/Data Interface

Table of Contents

Page

Foreword 2
Intellectual Property 2
Introduction 3
1 Scope 4
2 Conformance Notation 4
3 Normative References 4
4 Definition of Terms 5
5 System Overview 5
6 UHDTV1 Mapping into Single-link or Dual-link 10G-SDI 6
6.1 Video Payload Mapping 6
6.2 Single-link 10G-SDI for System U1.1 to U1.5 8
6.3 Dual-link 10G-SDI for System U1.6 to U1.9 8
6.4 Optical Interface Characteristics 10
6.5 ANC/Audio Data Mapping 10
7 UHDTV2 Mapping into Quad-link or Octa-link 10G-SDI 12
7.1 Video Payload Mapping 12
7.2 Quad-link 10G-SDI for System U2.1 to U2.5 14
7.3 Octa-link 10G-SDI for System U2.6 to U2.9 15
7.4 Optical Interface Characteristics 15
7.5 ANC/Audio Data Mapping 16
Annex A Bibliography (Informative) 19

Copyright © 2012 by THE SOCIETY OF
MOTION PICTURE AND TELEVISION ENGINEERS
3 Barker Avenue., White Plains, NY 10601
(914) 761-1100

Approved
August 1, 2012

Documents
Document Sharing Hub
Full document details: SMPTE ST 2036-3:2012
Authorized licensed use limited to: Stanford University. Downloaded on October 08,2016 at 08:34:59 UTC from IEEE Xplore. Restrictions apply.

Foreword

SMPTE (the Society of Motion Picture and Television Engineers) is an internationally-recognized standards developing organization. Headquartered and incorporated in the United States of America, SMPTE has members in over 80 countries on six continents. SMPTE's Engineering Documents, including Standards, Recommended Practices, and Engineering Guidelines, are prepared by SMPTE's Technology Committees. Participation in these Committees is open to all with a bona fide interest in their work. SMPTE cooperates closely with other standards-developing organizations, including ISO, IEC and ITU.

SMPTE Engineering Documents are drafted in accordance with the rules given in Part XIII of its Operations Manual

SMPTE ST 2036-3 was prepared by Technology Committee 32NF.

Intellectual Property

The user's attention is called to the possibility that compliance with this standard may require use of an invention covered by patent rights.

By publication of this standard, no position is taken with respect to the validity of this claim or of any patent rights in connection therewith.

The patent holder has, however, filed a statement of willingness to grant a license under these rights on reasonable and nondiscriminatory terms and conditions to applicants desiring to obtain such a license. Details may be obtained from the publisher.

No representation or warranty is made or implied that this is the only license that may be required to avoid infringement in the use of this standard.

Documents
Document Sharing Hub

Authorized licensed use limited to: Stanford University. Downloaded on October 08,2016 at 08:34:59 UTC from IEEE Xplore. Restrictions apply.
Full document details: SMPTE ST 2036-3:2012

Introduction

SMPTE ST 2036 Ultra High Definition Television suite of documents is in multiple parts.

This document is Part 3 of SMPTE ST 2036 and describes UHDTV1, 2 image mapping into a Single-link or a Multi-link 10 Gb/s Serial Signal/Data Interface (10G-SDI) Mode D defined in SMPTE ST 435-2.

The source UHDTV (Ultra High Definition Television) image sample structures for the interface are defined in SMPTE ST 2036-1 and are listed in Table 1. UHDTV has an image format (sample structure) of 3840 × 2160 (UHDTV1) or 7680 × 4320 (UHDTV2).

Table 1 – Image sample structures and frame rates of UHDTV systems

System category	System nomenclature	Luma or R’ G’ B’ samples per line	Lines per frame	Frame rate (Hz)
UHDTV 1	3840 × 2160/23.98/P	3840	2160	24/1.001
	3840 × 2160/24/P	3840	2160	24
	3840 × 2160/25/P	3840	2160	25
	3840 × 2160/29.97/P	3840	2160	30/1.001
	3840 × 2160/30/P	3840	2160	30
	3840 × 2160/50/P	3840	2160	50
	3840 × 2160/59.94/P	3840	2160	60/1.001
	3840 × 2160/60/P	3840	2160	60
UHDTV 2	7680 × 4320/23.98/P	7680	4320	24/1.001
	7680 × 4320/24/P	7680	4320	24
	7680 × 4320/25/P	7680	4320	25
	7680 × 4320/29.97/P	7680	4320	30/1.001
	7680 × 4320/30/P	7680	4320	30
	7680 × 4320/50/P	7680	4320	50
	7680 × 4320/59.94/P	7680	4320	60/1.001
	7680 × 4320/60/P	7680	4320	60

Documents Document Sharing Hub
Full document details: SMPTE ST 2036-3:2012
Authorized licensed use limited to: Stanford University. Downloaded on October 08,2016 at 08:34:59 UTC from IEEE Xplore. Restrictions apply.

1 Scope

This document defines UHDTV video payload mapping into Single-link, Dual-link, Quad-link or Octa-link 10G-SDI Mode D defined in SMPTE ST 435-2. This document also defines mapping of ANC, Audio Data, payload ID and other ancillary data formatted as defined in SMPTE ST 291. The “Basic Stream” complies with the interleaved data stream defined in SMPTE ST 292-1 and is utilized as the input source stream s for the 10G-SDI.

When transporting UHDTV1,2 signals through a single single-mode fiber, WDM (Wavelength Division Multiplexing) or DWDM (Dense Wavelength Division Multiplexing) as defined in Section 6.4 and Section 7.4 may be used.

2 Conformance Notation

Normative text is text that describes elements of the design that are indispensable or text that contains the conformance language keywords: "shall," "should," or "may." Informative text is text that is potentially helpful to the user, but not indispensable, and that can be removed, changed, or added editorially without affecting interoperability. Informative text does not contain any conformance keywords.

All text in this document is, by default, normative, except: the Introduction, any section explicitly labeled as "Informative" or individual paragraphs that start with "Note:”.

The keywords "shall" and "shall not" indicate requirements strictly to be followed in order to conform to the document and from which no deviation is permitted.

The keywords, "should" and "should not" indicate that, among several possibilities, one is recommended as particularly suitable, without mentioning or excluding others; or that a certain course of action is preferred but not necessarily required; or that (in the negative form) a certain possibility or course of action is deprecated but not prohibited.

The keywords "may" and "need not" indicate courses of action permissible within the limits of the document.

The keyword “reserved” indicates a provision that is not defined at this time, shall not be used, and may be defined in the future. The keyword “forbidden” indicates “reserved” and, in addition, indicates that the provision will never be defined in the future.

A conformant implementation according to this document is one that includes all mandatory provisions ("shall") and, if implemented, all recommended provisions ("should") as described. A conformant implementation need not implement optional provisions ("may") and need not implement them as described.

Unless otherwise specified, the order of precedence of the types of normative information in this document shall be as follows: Normative prose shall be the authoritative definition; Tables shall be next; followed by formal languages; then figures; and then any other language forms

3 Normative References

The following standards contain provisions which, through reference in this text, constitute provisions of this standard. At the time of publication, the editions indicated were valid. All standards are subject to revision, and parties to agreements based on this standard are encouraged to investigate the possibility of applying the most recent edition of the standards indicated below.

SMPTE ST 291:2011, Ancillary Data Packet and Space Formatting

SMPTE ST 292-1:2012, 1.5 Gb/s Signal/Data Serial Interface

Documents
Document Sharing Hub

Full document details: SMPTE ST 2036-3:2012
Authorized licensed use limited to: Stanford University. Downloaded on October 08,2016 at 08:34:59 UTC from IEEE Xplore. Restrictions apply.

SMPTE ST 299-1:2009, 24-Bit Digital Audio Format for SMPTE 292 Bit-Serial Interface

SMPTE ST 352:2011, Payload Identification Codes for Serial Digital Interfaces

SMPTE ST 372:2011, Dual Link 1.5 Gb/s Digital Interface for 1920 × 1080 and 2048 × 1080 Picture Formats

SMPTE ST 435-1:2012, 10 Gb/s Serial Signal/Data Interface — Part 1: Basic Stream Derivation

SMPTE ST 435-2:2012, 10 Gb/s Serial Signal/Data Interface — Part 2: 10.692 Gb/s Stream — Basic Stream Data Mapping

SMPTE ST 435-3:2012, 10 Gb/s Serial Signal/Data Interface — Part 3: 10.692 Gb/s Optical Fiber Interface

SMPTE ST 2036-1:2009, Ultra High Definition Television — Image Parameter Values for Program Production

4 Definition of Terms

4.1 UHDTV
Ultra High Definition Television, having an image format (sample structure) of 3840 × 2160 or 7680 × 4320

4.2 UHDTV1
class of UHDTV having an image format (sample structure) of 3840 × 2160

4.3 UHDTV2
class of UHDTV having an image format (sample structure) of 7680 × 4320

4.4 Basic Stream
a 10-bit parallel stream which has the same structure as the source data stream defined in SMPTE ST 292-1. This interleaved data stream carries the image structure defined in the source format data defined in SMPTE ST 292-1

5 System Overview

UHDTV1, 2 images shall be mapped into 4 or 16 Sub images through 2-sample interleave division and shall be mapped into Single-link, Dual-link, Quad-link or Octa-link 10G-SDI Mode D defined in SMPTE ST 435-2 through Basic Streams that comply with 1.5 Gb/s Serial Digital Interface defined in SMPTE ST 292-1 as shown in Figure 1.

When embedding optional ancillary data, the ancillary data packet format shall be in conformance with SMPTE ST 291. Ancillary audio data shall be as defined in SMPTE ST 299-1 and shall be mapped in the following order:

(1st) CH1 Basic Stream of 10G-SDI Link 1, up to a maximum of 16 channels at a sampling frequency of 48 kHz or up to a maximum of 8 channels at a sampling frequency of 96 kHz

(2nd) CH1 Basic Stream of 10G-SDI Link 2, up to a maximum of 16 channels at a sampling frequency of 48 kHz or up to a maximum of 8 channels at a sampling frequency of 96 kHz

The multiple numbers of Basic Streams conveying the source data of UHDTV images shall be multiplexed and serialized into the Single-link or Multiple-link 10G-SDI as defined in the following sections.

Documents Document Sharing Hub
Full document details: SMPTE ST 2036-3:2012
Authorized licensed use limited to: Stanford University. Downloaded on October 08,2016 at 08:34:59 UTC from IEEE Xplore. Restrictions apply.

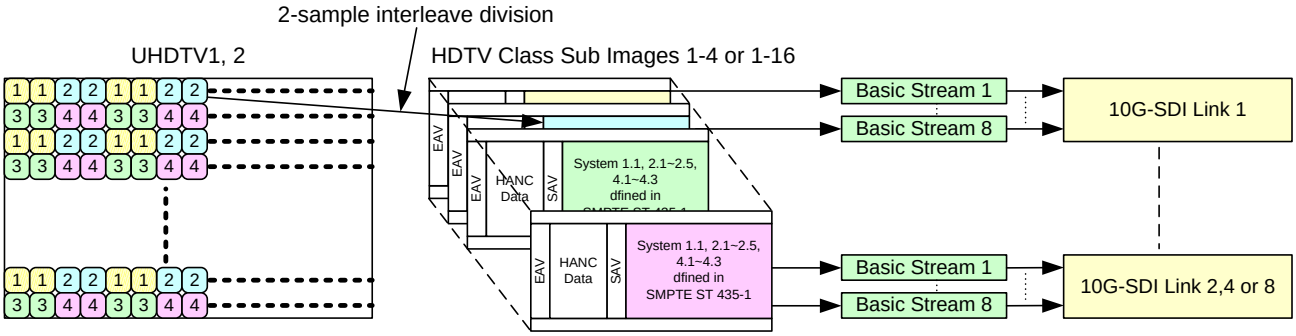

Figure 1 – UHDTV1, 2 mapping overview

6 UHDTV1 Mapping into Single-link or Dual-link 10G-SDI

6.1 Video Payload Mapping

Table 2 shows the image formats which shall be divided into four Sub images by 2-sample interleave division and shall be mapped into the Single-link or the Dual-link 10G-SDI Mode D defined by SMPTE ST 435-2. Each Sub image shall have the 1920 × 1080 picture format defined as System 1.1, 2.1, 2.2, 2.3, 2.4, 2.5, 4.1, 4.2 or 4.3 in SMPTE ST 435-1.

Documents
Document Sharing Hub
Full document details: SMPTE ST 2036-3:2012
Authorized licensed use limited to: Stanford University. Downloaded on October 08,2016 at 08:34:59 UTC from IEEE Xplore. Restrictions apply.