T 227 om-17
TENTATIVE STANDARD – 1943
OFFICIAL STANDARD – 1946
REVISED – 1958
OFFICIAL TEST METHOD – 1985
REVISED – 1992
REVISED – 1994
REVISED – 1999
REVISED – 2004
REVISED – 2009
REVISED – 2017
©2017 TAPPI

The information and data contained in this document were prepared by a technical committee of the Association. The committee and the Association assume no liability or responsibility in connection with the use of such information or data, including but not limited to any liability under patent, copyright, or trade secret laws. The user is responsible for determining that this document is the most recent edition published.

CAUTION:
This Test Method may include safety precautions which are believed to be appropriate at the time of publication of the method. The intent of these is to alert the user of the method to safety issues related to such use. The user is responsible for determining that the safety precautions are complete and are appropriate to their use of the method, and for ensuring that suitable safety practices have not changed since publication of the method. This method may require the use, disposal, or both, of chemicals which may present serious health hazards to humans. Procedures for the handling of such substances are set forth on Material Safety Data Sheets which must be developed by all manufacturers and importers of potentially hazardous chemicals and maintained by all distributors of potentially hazardous chemicals. Prior to the use of this method, the user must determine whether any of the chemicals to be used or disposed of are potentially hazardous and, if so, must follow strictly the procedures specified by both the manufacturer, as well as local, state, and federal authorities for safe use and disposal of these chemicals.

Freeness of pulp (Canadian standard method)

1. Scope

The freeness of pulp is designed to give a measure of the rate at which a dilute suspension of pulp (3 g of pulp in 1 L of water) may be drained. The freeness, or drainage rate (see TAPPI T 221 "Drainage Time of Pulp"), has been shown to be related to the surface conditions and swelling of the fibers. Besides these factors, the result is dependent also on conditions under which the test is carried out, such as stock preparation, temperature, and water quality. The applicability of this method to all types of pulps has not been determined.

2. Significance

The procedure was originally designed to yield a test value suitable primarily for the control of manufacture of groundwood. It is also widely used to follow the changes in drainage rate of various chemical pulps during beating and refining. Treatments which produce a large proportion of fines may sometimes cause an anomalous rise of freeness (false freeness) usually at values below 100 mL. Freeness values do not necessarily correlate with the drainage behavior of pulp material on a commercial paper machine.

3. Apparatus

3.1 *The freeness tester*[1] consists of a drainage chamber and a rate-measuring funnel, mounted on a suitable support (see Fig. 1). The apparatus is manufactured to drawings and specifications and each instrument is inspected and calibrated before delivery. Some instruments may have a coating of marine varnish on the surface (see caution note in section 5.1.2).

[1] Names of suppliers of testing equipment and materials for this method may be found on the Test Equipment Suppliers list, available as part of the CD or printed set of Standards, or on the TAPPI website general Standards page.

Approved by the Standard Specific Interest Group for this Test Method
TAPPI

Documents
Document Sharing Hub

Copyright TAPPI
Provided by IHS Markit under license with TAPPI
No reproduction or networking permitted without license from IHS
Full document details: TAPPI T 227 OM 2017

Licensee=University of Alberta/5966844001, User=Drinkkumaoh, sarahthe
Not for Resale, 05/18/2018 03:43:46 MDT

3.1.1 The drainage chamber is a brass, or other suitable material, cylinder, the bottom of which contains a perforated brass screen plate, and is closed with an airtight lid, hinged on one side of the cylinder and latched at the other. The lid should be fitted so that not more than 7 mL of water will flow when the bottom cover is opened at the start of a test.

3.1.2 The upper end of the cylinder is closed by a similar lid, attached to the shelf bracket in which the cylinder is held when in use. The hinge and latching mechanisms are designed to provide an airtight closure by means of a rubber gasket on the inside of the lid. An air cock is inserted in the center of the upper lid to admit air to the cylinder at the start of a test.

3.1.3 The cylinder is 101.6 ± 0.5 mm (4 in.) inside diameter by 127.0 ± 1.0 mm (5 in.) inside height. The height gives a capacity of slightly over 1000 mL above the screen plate. The air-cock bore is 4.8 mm. This dimension is not critical but should not be substantially reduced.

3.1.4 The screen plate is 112.0 + 0.5 mm - 0.0 mm in diameter, 0.51 mm ± 0.05 mm (0.020 in.) thick and has perforations of 0.51 mm diameter spaced 625 per 1 in.^{2} (about 97 per cm^2) of surface. The plate is mounted so that the burr of the punched perforations is downward.

NOTE 1: Since it has not been possible to duplicate these plates by reference to the dimension of the holes, all plates are standardized by comparison against master plates. Screen plates of alternate diameters that have been calibrated against the master instrument, have a diameter larger than the inside of the cylinder, and fit appropriately inside the collar (on the bottom of the cylinder) may be utilized.

3.1.5 The rate-measuring funnel is 203 mm (8 in.) open top diameter by overall length 278 mm (10 15/16 in.). The main cone has a 29° ± 5′ slope on the inside which flares out into a top cylindrical portion. The bottom (apex) terminates in a carefully machined orifice piece attached to the bottom of the funnel. The funnel is also provided with a side-discharge orifice.

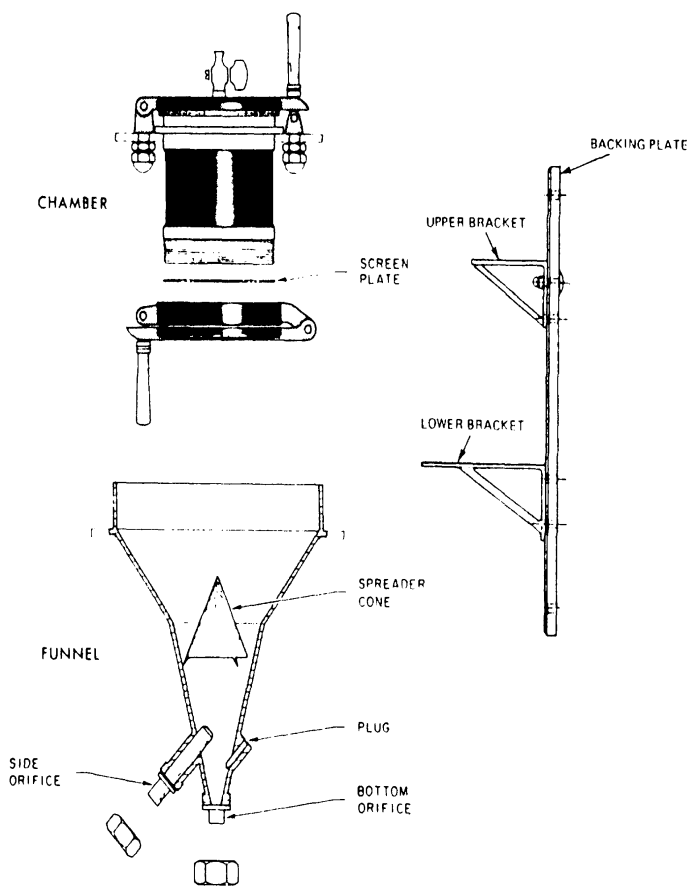

Fig. 1. Freeness tester (new model).

Documents
Document Sharing Hub

Copyright TAPPI
Provided by IHS Markit under license with TAPPI
No reproduction or networking permitted without license from IHS
Full document details: TAPPI T 227 OM 2017

Licensee=University of Alberta/5966844001, User=Drinkkumaoh, sarahthe
Not for Resale, 05/18/2018 03:43:46 MDT

3.1.6 The side-discharge orifice consists of a hollow tube, 12.7 mm (0.50 in.) inside diameter, which penetrates the well of the funnel. This tube is inserted so that the distance between the overflow lip of the tube inside the funnel and the bottom of the funnel section is 50.8 ± 0.7 mm.

NOTE 2: The measurement of the side orifice is extremely critical and set during the calibration before being sent to the purchaser. It **MUST NOT** be changed. If disturbed, it should be returned to the supplier for recalibration.

3.1.7 The volume in the bottom section of the funnel, between the bottom of the funnel and the overflow lip of the side orifice is adjusted to 23.5 ± 0.2 mL. This volume is adjusted during calibration and **must not** be changed.

NOTE 3: In 1967, the manufacturer not only changed the angle of the side orifice but also changed the angle of opening from angular to square cut. If the serial number on the CSF tester is not preceded by the letter "M" the tester is a pre-1967 model (see Appendix). FPInnovations reports that this change does not affect the test result.

NOTE 4: The assembled tester is checked and certified that it matches the performance of a master standard tester, and the bottom orifice, side orifice and funnel volume are adjusted to meet specifications. **Any change in the critical adjustments will affect calibration and render the certification invalid.** At a minimum, freeness testers in frequent use should be recalibrated every five years or sooner for instruments used with pulps containing high resin contents or residual bleaching chemicals.

3.1.8 A detachable spreader cone is supported on three legs inside the funnel to prevent splash from directly entering the side orifice.

3.1.9 The cylinder and the drainage cone are each supported by flanges in the openings of two machined brackets supported by a backing plate. Mount the instrument so as to minimize vibration. Level by means of a machinist's level placed on the open top of the rate measuring funnel, in position in the lower bracket. Rotation of the level on the funnel will show when the instrument is mounted in a true level position. When the funnel is mounted in this fashion, the remaining components will be properly aligned, and the instrument is ready for operation.

3.2 *Graduated cylinders*, 1000 mL and one of the same or lesser capacity with 10 mL or smaller divisions, to suit the pulp being tested. A balance and 1000mL capacity container can be used as an alternative method to measure the amount of water discharged from the side orifice.

NOTE 5: Many freeness graduated cylinders are inaccurate. It is recommended that the pulp and water suspension be weighed using a tared beaker. At a minimum, check the accuracy of each freeness graduate before use.

3.3 *Standard disintegrator* (required only when pulp is not in slush form), described in Appendix A of TAPPI 205 "Forming Handsheets for Physical Tests of Pulp."

3.4 *Bucket*, of at least 10 L capacity to hold the stock.

3.5 *Dipper*, a shallow plastic cup with a thick, smooth lip is recommended.

3.6 *Büchner funnel and flask.*

3.7 *Tared filter paper*.

3.8 *Balance*, capacity of at least 2000 g and capable of reading accurately to 0.1 g.

3.9 *Weighing bottle*, preferably a shallow type, to accommodate a folded pad of pulp from the Büchner funnel.

3.10 ASTM Type II water is preferred to run freeness tests; however, water quality of a conductance of less than 4 µs/cm has been found acceptable. Tap water is considered unacceptable for accurate/repeatable test results (*1*).

4. Care of the instrument

4.1 Keep the instrument clean at all times, free from stock accumulations, pitch, oil or grease, after each test, rinse the chamber out with water. It is particularly necessary to see that no pulp is left on the surfaces of the chamber, funnel or in the holes of the screen plate.

NOTE 6: Continual use with a sulfite pulp or a sized paper stock will cause the surfaces inside the cone to become water repellent. Wash with a solution of a synthetic detergent and hot water to make this surface wettable, then thoroughly rinse with clean water.

Documents
Document Sharing Hub

Copyright TAPPI
Provided by IHS Markit under license with TAPPI
No reproduction or networking permitted without license from IHS
Full document details: TAPPI T 227 OM 2017

Licensee=University of Alberta/5966844001, User=Drinkkumaoh, sarahthe
Not for Resale, 05/18/2018 03:43:46 MDT

4.1.1 If the instrument is to be left out of use, carefully and thoroughly wash away any pulp that might dry on it, dry with a soft lint-free cloth, close the top lid, but do not clamp it, and leave the bottom lid of the cylinder open. It is not good practice to leave water in the chamber for long periods of time. Also, it is not good practice to leave the top lid open, partially closing it by resting the lid on the top squared section of the handle. Leaving the lid closed but not clamped, which will compress the gasket, is also acceptable. Before making a test, thoroughly wet all the inside surfaces with distilled or deionized water at the temperature of the stock to be tested. If a detergent is used, rinse well with clean hot water to remove all traces of detergent...THIS IS MOST IMPORTANT.

NOTE 7: The practice of keeping an extra standard screen plate for a reference standard is strongly recommended. The screen plate in current use may then be checked at regular intervals. After use the reference plate should always be rinsed with hot water, then rinsed in methanol and dried with a lint-free cloth. With careful use a screen plate has a long life, but under usual mill conditions, it may become dirty with resin accumulation. This resin may be removed with an organic solvent or by gently brushing a mild detergent free from carboxymethyl-cellulose and phosphates, followed by a thorough washing with hot water. **Under no circumstances may acid be used to clean the screen plate. Bent or damaged screen plates must not be used.**

4.1.2 When replacing the screen plate, care must be taken when tightening the collar to avoid squeezing the chamber out of round. If necessary, a strap wrench, **not a vise**, to grip it and a suitable mount to hold the collar and screen plate in place are recommended.

5. Calibration

5.1 Actual calibration can only be done against a master instrument maintained by a provider of calibration standards. However, a quick on-site check can be carried out to assess the calibration of the instrument. It is recommended that the instrument be recalibrated every three years by contacting the service provider.

5.1.1 Run the water check. The certificate of inspection issued for each tester gives a value (using distilled or deionized water at 20°C) for the side orifice discharge which may be used as a field check on the bottom orifice. The test is described on the certificate. Instruments manufactured or calibrated by a provider of calibration standards are issued with specific water check values. In general, one provider of calibration standards reports that most instruments have water test values in the range of 880 to 890 mL distilled or deionized water at 20°C. Due to the inaccuracies of some graduated freeness cylinders, verify the graduations by weight (see note 5) or perform the water checks by gravimetric techniques using a tared beaker of 1000-mL capacity.

5.1.2 When the flow is less than specified, clean the instrument with an organic solvent or detergent, followed by thorough rinsing with hot water. More drastic cleaning may destroy the calibration of the bottom orifice. If the flow is greater than the specified value, the bottom orifice must be replaced. **Caution:** Some freeness instruments are manufactured and calibrated with an inside coating of marine varnish. “Aggressive” cleaning may remove this coating. As a result, the instrument will yield different results with/without the varnish coating.

5.1.3 Standard reference pulps are available[2] and should be used to also check the calibration. Perform Calibration checks with reference pulps by weight only (no graduate). Follow the directions for the initial (“0” point CSF) pulp dispersion and ± mL specifications to check the freeness tester calibration (along with the water check).

NOTE 8: Instruments are calibrated as a unit, therefore, DO NOT interchange cylinders and/or funnels between CSF testers.

6. Sampling

6.1 When dealing with a mill consignment, take a sample of pulp, about 25.8 cm^2 (4 $in.^2$) in area, from the interior of every bale included in the official test for moisture. Portions of specimens taken for the moisture test, but not dried, may be used. The weight of the composite sample should be at least 50 g, preferably 100 g or more, of dry fiber for duplicate tests.

6.1.1 For slush pulps, take a representative sample equivalent to at least 10 g of dry fiber.

6.2 *Test specimen*. Unless the pulp is in slush form, prepare the specimen for disintegration in water as follows: Weigh to the nearest 0.5 g a representative specimen by tearing equal portions from all the sample collected,

[2]Reference made to TAPPI’s calibration laboratory/materials list.

Documents
Document Sharing Hub

Copyright TAPPI
Provided by IHS Markit under license with TAPPI
No reproduction or networking permitted without license from IHS
Full document details: TAPPI T 227 OM 2017

Licensee=University of Alberta/5966844001, User=Drinkkumaoh, sarahthe
Not for Resale, 05/18/2018 03:43:46 MDT

equivalent to 24 g of moisture free fiber. DO NOT cut the pulp or use cut edges. If the sample is dry, wet it thoroughly with cold water, tear, not cut, into pieces about 2.5 cm square (1 in. square) and soak in distilled or deionized water in a bucket for at least 4 h, or in the case of a dried sample of mechanical pulp which is to be furnished in the moist form, allow it to soak for 24 h.

NOTE 9: As far as it is known, soaking pulp for longer than 4 h does not appreciably affect the results.

7. Disintegration

7.1 Make the mixture up to 2000 mL (1.2% consistency) with water at 20 ± 2°C (see 6.2 test specimen). The consistency, at which the pulp is disintegrated, as well as the disintegration time, is critical for reproducibility. Failure to disintegrate a sample at the correct consistency (1.20%), as well as disintegrating a sample for too long a time, will change values significantly of any pulp, especially bleached pulp (hardwoods are most sensitive). Disintegrate any pulp just until no fiber bundles remain. It is recommended that samples be disintegrated one minute and then visually examined by diluting a sample portion of the pulp sample to see that no fiber bundles are present, repeating the process until only individual fibers remain.

NOTE 10: The freeness of pulp is known to be affected by dissolved solids and the pH of water used in the determination. Distilled or deionized water **MUST** be used for dilution of the stock. Pulps containing fillers and additives do not fulfill these requirements. Disintegration may reduce the freeness of the pulp; therefore, it is important that the disintegration time is part of the report.

7.2 Take the temperature of the stock and the water to be used for diluting. Dilute the defibered pulp to 0.3 ± 0.02% (moisture free) consistency after adjusting the temperature of the stock in the bucket to 20 ± 2°C (see Section 9 Consistency).

NOTE 11: It is necessary that the water holding the pulp suspension be sufficiently free from dissolved air so that sample bubbles are not liberated from the water on standing. Bubbles adhere to the fibers and cause erroneous results that may either be positive or negative in the freeness results. Water taken from high pressure mains may require being left standing for several hours, or else subjected to a vacuum before use.

7.3 For groundwood it is not necessary that either the exact consistency or temperature be used, as tables are provided which permit correcting the result to that for standard conditions. Stock consistency should be between 0.27 to 0.33% and stock temperature between 17 to 23°C. Note that corrections beyond the ± 0.3% consistency and temperature beyond ± 3°C of the standard temperature do not fulfill the conditions of this method and may result in questionable results. **The correction Tables I and II presented in this method were developed from groundwood freeness evaluation studies. The correction Tables III and IV presented in this method were developed from a bleached kraft Douglas fir freeness evaluation (*4*).** *For maximum accuracy, for chemical pulps, correction tables for each specific pulp should be developed. For accuracy, in the case of pulps other than groundwood, it is advisable to adjust the slush pulp to the standard conditions of consistency and temperature, 0.30 ± 0.03% consistency and 20 ± 3°C temperature.*

8. Procedure

8.1 Thoroughly clean and wet the freeness tester with distilled or deionized water at the temperature of the stock to be tested.

8.1.1 Place the drainage chamber on the upper supporting bracket with its lower lid closed and the upper lid and air-cock open.

8.1.2 Place the graduated cylinder in position to receive the discharge from the side orifice, and a container to collect the discharge from the bottom orifice.

NOTE 12: In the freeness test, collect the discharge from the side and bottom orifices along with the dewatered sample from the chamber for use in determining the consistency (see 9.1).

Documents
Document Sharing Hub

Copyright TAPPI
Provided by IHS Markit under license with TAPPI
No reproduction or networking permitted without license from IHS
Full document details: TAPPI T 227 OM 2017

Licensee=University of Alberta/5966844001, User=Drinkkumaoh, sarahthe
Not for Resale, 05/18/2018 03:43:46 MDT