UM 258
ISSUED PRIOR TO 1991
REVIEWED AND RETAINED IN THE UM SET – 2010
REVISED – 2015
©2015 TAPPI

The information and data contained in this document were prepared by a technical working group of the Association. The working group and the Association assume no liability or responsibility in connection with the use of such information or data, including but not limited to any liability under patent, copyright, or trade secret laws. The user is responsible for determining that this document is the most recent edition published.

PLEASE NOTE: A TAPPI Useful Method (UM) is a document written to describe a test, procedure, or practice which may be proposed by a Working Group of no fewer than three TAPPI members not employed by the same organization and written in the same general style as a TAPPI Standard Test Method, but with the inclusion or exclusion of certain sections as deemed appropriate by the Working Group, and with minimum precision requirements that may be expanded at the discretion of the Working Group. A UM is written with no less attention to proper use of the language to describe the procedure using essentially the same elements of a TAPPI Standard Test Method, but in a less rigorous manner. TAPPI Useful Methods do not receive the same review through a rigorous process of openness, voluntary review, and consensus as do the TAPPI Standard Test Methods, and as such, are not intended to be used as referee methods as the TAPPI Standard Test Methods are.

CAUTION:
This method may include safety precautions which are believed to be appropriate at the time of publication of the method. The intent of these is to alert the user of the method to safety issues related to such use. The user is responsible for determining that the safety precautions are complete and are appropriate to their use of the method, and for ensuring that suitable safety practices have not changed since publication of the method. This method may require the use, disposal, or both, of chemicals which may present serious health hazards to humans. Procedures for the handling of such substances are set forth on Material Safety Data Sheets which must be developed by all manufacturers and importers of potentially hazardous chemicals and maintained by all distributors of potentially hazardous chemicals. Prior to the use of this method, the user must determine whether any of the chemicals to be used or disposed of are potentially hazardous and, if so, must follow strictly the procedures specified by both the manufacturer, as well as local, state, and federal authorities for safe use and disposal of these chemicals.

Laboratory processing of pulp (Kollergang method)

Scope

This method (*1*, *2*) concerns the processing of pulp by means of a laboratory beating device, the Kollergang, prior to forming handsheets, for the purpose of determining its behavior when subjected to a definite beating schedule [See also TAPPI T 200 “Laboratory Processing of Pulp (Beater Method),” TAPPI T 248 “Laboratory Beating of Pulp (PFI Mill Method),” UM 221 “Laboratory Processing of Pulp (plate refiner),” and UM 253 “Laboratory Processing of Pulp (Ball or Pebble-Mill Method”)]. Only the furnishing and processing of the stock and the withdrawal and dilution of specimens are described in detail. Forming of the sheets is covered by T 205 “Forming Handsheets for Physical Tests of Pulp” and their physical testing by T 220 “Physical Testing of Pulp Handsheets.”

Safety precautions

There are no special safety precautions for this method.

Significance

The beating action of the Kollergang imparts an intensive fiber-to-fiber action without any appreciable metal-to-fiber action. Consequently, its action seems to be independent of the roughness or microroughness of the active metal surfaces and thus will remain constant.

The weight of the rotating elements is sufficient to ensure that the fibers can be shortened to a degree comparable with common practice using modern mill equipment. The Kollergang will not develop the maximum strength of a pulp, for which purpose the zero-span breaking length of a sample of pulp, after at least a moderate amount of beating (T 231 “Zero-Span Breaking Length of Pulp”), is an excellent indicator.

Approved by a Working Group of TAPPI in accordance with the Useful Method Guidelines
TAPPI

Documents
Document Sharing Hub

Copyright TAPPI
Provided by IHS under license with TAPPI
No reproduction or networking permitted without license from IHS
Full document details: TAPPI UM 258 2015

Licensee=University of Alberta/5966844001, User=rasoulivand, amir
Not for Resale, 01/01/2016 00:17:40 MST

Apparatus

1. *Disintegrator*, as described in Appendix A of T 205.

2. *Kollergang*. The plan view is shown in Fig. 1, and a section in Fig. 2. It consists of an annular V-shaped tub, A, of a rustless control metal with a circular, hard, stainless steel track, B, 12 mm wide and 280 mm (11 in.) diameter, inserted in the bottom. The three rollers, C, rotate on this track These rollers are about 50 mm (2 in.) thick and are made of chromium-plated cast iron or stainless steel. Like the track, they are also 280 mm (11 in.) diameter and have their circumferential edges beveled to 45°. As shown in Fig. 3, phosphor bronze rims, D, carry the working faces, which are 9.0 mm wide, with a groove in the center 3.0 mm wide and about 3.0 mm deep. The rims are inserted around the rollers and are fastened with countersunk screws. The outsides of the rims are normally 1 mm deep, and since all edges are vertical, even after wear up to 1 mm, the width of the working faces will remain constant and thus also will the action of the rollers.

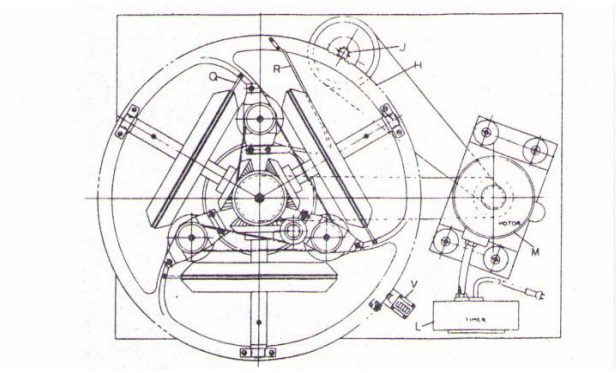

Fig. 1. Plan of Kollergang

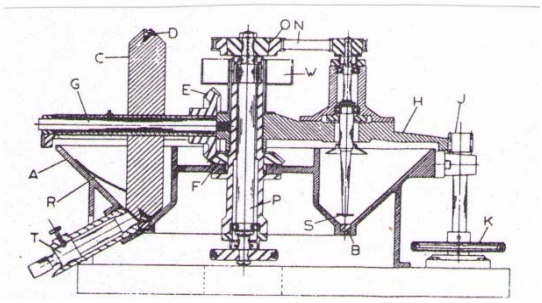

Fig. 2. Section through Kollergang

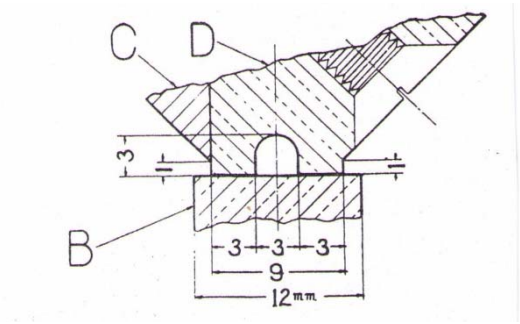

Fig. 3. Section of rim.

Documents
Document Sharing Hub

Copyright TAPPI
Provided by IHS under license with TAPPI
No reproduction or networking permitted without license from IHS
Full document details: TAPPI UM 258 2015

Licensee=University of Alberta/5966844001, User=rasoulivand, amir
Not for Resale, 01/01/2016 00:17:40 MST

The three rollers have bronze bushings connected through bevel gears, E, to a stationary bevel gear, F, the bushings rotating on steel shafts, G. The gears and dimensions are so arranged that a rolling motion of the center of the working edge of the runners on the stainless steel track of the same diameter is achieved without slip. The frame H, carrying the rollers and propeller system, rotates about the center bushing. The frame is free to move vertically so that the weight of all the rotating elements is carried by the rollers. This amount is adjusted to exactly 80 kg by means of the weight in W so that a weight of 26.7 kg is applied to each working zone.

The frame, H, has a gear cut in its rim and is rotated at $33^1/_3$ ± ½ rpm by means of pinion, J, driven by pulley, K, and a round belt, by vertical motor, M. A counter, V, which can be reset to zero, is activated at each complete revolution of the frame and rollers. A time switch, L, controls the motor and stops it after a preset time.

The propellers S are 25.4 mm (1 in.) diameter with blades set to push the stock downward. Their bottom surfaces are 13 mm (½ in.) above and central to the stainless steel track, B. The propellers are rotated together at 7200 ± 100 rpm by means of gear belt, N, driven by sprocket, O, at the top of vertical shaft, P, driven by a V-belt from motor, M.

Each propeller shaft is extended 9 mm ($^3/_8$ in.) below the surface of each propeller by a 6-mm ($^1/_4$ in.) diameter cylindrical-headed screw (not shown), the lower end of which is 3 mm ($^1/_8$ in.) above the track. These projections serve as plows to prevent certain long-fibered pulps, like some undried kraft pulps, from being temporarily compacted in the bottom of the V-shaped annulus over the track and ensure smooth operation.

By adjusting the diameters of the belt pulleys, the specified speeds of both frame and propellers can be accurately set. A thick white line painted on the radius of the center drive sprocket or on one of the sprockets on top of a propeller shaft and illuminated by a 60-Hz fluorescent light permits the speed of the propellers (7200 rpm) or the speed of the centerdrive sprocket (3600 rpm) to be accurately checked.

NOTE 1: The prototype model had propeller drives with a smooth, round belt. In some of the later models, the propellers were driven by individual motors which, unfortunately, made their speeds difficult to control with sufficient accuracy. Since the speed of the propellers has an influence on the development of the strength of a stock by their rubbing action, especially in the initial stages, better control of their speed was desirable and with later models has been provided by the gear belt.

A doctor, Q, for each roller, made of 2.5-mm ($^3/_{32}$-in.) brass or stainless steel wire, is carried on each arm of the frame. Each doctor is 76 mm (3 in.) long and its end rides in the center groove of each rim to prevent plugging. A single doctor, R, 230 mm (9 in.) long of 5 × 2.5 mm ($^3/_{16}$ × $^3/_{32}$ in.) stainless steel or brass, is carried by the rim of the spider and sweeps any stock on the outer side of the tub into the trough. This doctor is self-cleansing and, if properly set with its leading long edge touching the sides of the trough, should effectively keep all the tracks in the trough clean. A wash-out plug for cleaning the trough is shown at T.

3. *Standard scraper and gauge*, 3 mm wide, to check the faces of the rims and to remove any edge burrs if present. These are needed only in the case of some accidental damage to the rims.

4. *Stock sampler.* Large soup spoon or small ladle, with handle suitably bent upward.

5. *Graduated cylinder*, 100 mL capacity.

6. *Stirring and sampling cup*, preferably a wide-mouthed plastic measuring cup with pouring lip and handle, 500-mL size. Any wide-mouthed plastic-ware cup (uncalibrated) may be substituted.

7. *Bucket*, with handle, about 8000 mL (2 gal) capacity, preferably polyethylene.

8. *Stock containers*, four or five stainless steel or plastic buckets up to 10,000 mL capacity. These should be graduated with marks at 1000-mL intervals.

9 *Dilute stock container*, a 38 to 57 L (10 to 15 gal) crock or large plastic container, preferably graduated with marks at 1000-mL intervals.

10. *Balance*, weighing to 200 g with a sensitivity of 0.1 g.

Calibration

Lift the framework, including the rollers and propellers, out of the tub and weigh. Check that the total weight is 80 ± 0.5 kg (176 ± 1 lb).

After every 100 beating tests, check the width of the rims on the rollers and, if necessary, correct with the special scraper provided with the instrument. To check the contact between the faces of the rollers and the track, smear a thin film of Prussian blue (high-spot indicator) on a section on the face of the rim, rotate the framework through three quarters of a turn, and observe that the print made by each rim is uniform and in the center of the track.

Documents
Document Sharing Hub

Copyright TAPPI
Provided by IHS under license with TAPPI
No reproduction or networking permitted without license from IHS
Full document details: TAPPI UM 258 2015

Licensee=University of Alberta/5966844001, User=rasoulivand, amir
Not for Resale, 01/01/2016 00:17:40 MST