UL 1012

STANDARD FOR SAFETY

Power Units Other Than Class 2

Documents
Document Sharing Hub

Full document details: UL 1012 2021

Documents
Document Sharing Hub

Full document details: UL 1012 2021

UL Standard for Safety for Power Units Other Than Class 2, UL 1012

Eighth Edition, Dated November 9, 2010

Summary of Topics

This revision of ANSI/UL 1012 dated March 30, 2021 is being issued to update the title page to reflect the most recent designation as a Reaffirmed American National Standard (ANS). No technical changes have been made.

Text that has been changed in any manner or impacted by UL's electronic publishing system is marked with a vertical line in the margin.

The requirements are substantially in accordance with Proposal(s) on this subject dated January 22, 2021.

All rights reserved. No part of this publication may be reproduced, stored in a retrieval system, or transmitted in any form by any means, electronic, mechanical photocopying, recording, or otherwise without prior permission of UL.

UL provides this Standard "as is" without warranty of any kind, either expressed or implied, including but not limited to, the implied warranties of merchantability or fitness for any purpose.

In no event will UL be liable for any special, incidental, consequential, indirect or similar damages, including loss of profits, lost savings, loss of data, or any other damages arising out of the use of or the inability to use this Standard, even if UL or an authorized UL representative has been advised of the possibility of such damage. In no event shall UL's liability for any damage ever exceed the price paid for this Standard, regardless of the form of the claim.

Users of the electronic versions of UL's Standards for Safety agree to defend, indemnify, and hold UL harmless from and against any loss, expense, liability, damage, claim, or judgment (including reasonable attorney's fees) resulting from any error or deviation introduced while purchaser is storing an electronic Standard on the purchaser's computer system.

Documents
Document Sharing Hub

Full document details: UL 1012 2021

No Text on This Page

Documents
Document Sharing Hub

Full document details: UL 1012 2021

NOVEMBER 9, 2010
(Title Page Reprinted: March 30, 2021)

ANSI/UL 1012-2012 (R2021)

UL 1012

Standard for Power Units Other Than Class 2

The first through fourth editions were titled the Standard for Power Supplies.

First Edition – September, 1976
Second Edition – September, 1978
Third Edition – March, 1982
Fourth Edition – July, 1989
Fifth Edition – August, 1992
Sixth Edition – June, 1994
Seventh Edition – April, 2005

Eighth Edition

November 9, 2010

This ANSI/UL Standard for Safety consists of the Eighth Edition including revisions through March 30, 2021.

The most recent designation of ANSI/UL 1012 as a Reaffirmed American National Standard (ANS) occurred on March 30, 2021. ANSI approval for a standard does not include the Cover Page, Transmittal Pages, and Title Page.

Comments or proposals for revisions on any part of the Standard may be submitted to UL at any time. Proposals should be submitted via a Proposal Request in UL's On-Line Collaborative Standards Development System (CSDS) at https://csds.ul.com.

UL's Standards for Safety are copyrighted by UL. Neither a printed nor electronic copy of a Standard should be altered in any way. All of UL's Standards and all copyrights, ownerships, and rights regarding those Standards shall remain the sole and exclusive property of UL.

COPYRIGHT © 2021 UNDERWRITERS LABORATORIES INC.

Documents
Document Sharing Hub

Full document details: UL 1012 2021

No Text on This Page

Documents
Document Sharing Hub

Full document details: UL 1012 2021

CONTENTS

INTRODUCTION

1 Scope 9
2 Components 10
3 Units of Measurement 10
4 Terminology 10
5 Undated References 10
6 Glossary 10

ALL POWER UNITS

CONSTRUCTION

7 Frame and Enclosure 13
7.1 General 13
7.2 Mounting means 17
7.3 Integral meters 17
7.4 Supporting material 18
7.5 Doors and covers 18
7.6 Protection against injury to persons 19
7.7 Modular units 19
8 Accessibility of Uninsulated Live Parts, Film-Coated Wire, and Moving Parts 20
9 Protection of Service Personnel 22
9.1 General 22
9.2 Mechanical servicing 22
9.3 Electrical servicing 23
10 Assembly 23
11 Protection Against Corrosion 24
12 Supply Connections 24
12.1 Permanently-connected power units 24
12.2 Wiring terminals and leads 25
12.3 Cord-connected power units 27
12.4 Strain relief 28
12.5 Bushings 29
13 Output Connections 29
14 Interconnections Between Sections 31
15 Battery Charger Backfeed Protection 32
16 Grounding Connections 32
17 Bonding of Internal Parts 34
17.1 General 34
17.2 Bonding conductor 35
18 Identification for Connection of Grounded Conductors 37
19 Wire Bending Space 38
20 Output Circuit Grounding 42
21 Live Parts 44
22 Internal Wiring 45
22.1 General 45
22.2 Protection of wiring 46
22.3 Electrical connections 46
23 Separation of Circuits 47
23.1 Factory wiring 47
23.2 Separation barriers 47
23.3 Field wiring 48

Documents
Document Sharing Hub
Full document details: UL 1012 2021

24 Insulating Materials 48
25 Motors 49
26 Transformers 49
26.1 General 49
26.2 Coil insulation 50
27 Resistors 52
28 Switches and Controls 52
29 Overload-Protective Devices 54
30 Fuses and Fuseholders 55
31 Output Alternating Current Power Circuits 55
32 Lampholders 57
33 Capacitors 57
34 Printed Wiring 58
35 Spacings 58
35.1 General 58
35.2 Alternative Spacings 63
35.3 Insulation liners and barriers 63
36 Control Circuits 65
37 Accessible Signal Circuits 67
38 Class 2 and Class 3 Output Circuits 68

PERFORMANCE

39 General 68
40 Leakage Current Test 69
41 Power Input Test 72
42 Temperature Test 73
43 Dielectric Voltage Withstand Test 78
43.1 General 78
43.2 Induced potential test 79
43.3 Maximum-voltage measurements 79
44 Tests on Insulating Materials 79
45 Mechanical Strength Tests for Metal Enclosures 79
46 Strain Relief and Bushing 80
47 Push-Back Relief Test 80
48 Overload of Switches and Controls 80
49 Static Load Test 81
50 Stability Test 81
51 Isolated Limited Energy Circuit Capacity 82
52 Overcurrent Protection Calibration Test 82
53 Neutral to Ground Potential Measurement Test 83
54 Abnormal Tests 83
54.1 General 83
54.2 Output short-circuit test 85
54.3 Blocked fan test 85
54.4 Fuse short circuit test 85
54.5 Voltage selector test 85
54.6 Relay and solenoid burnout 85
54.7 Transformer overload tests 85
54.8 Component short- and open-circuit test 86
54.9 Backfeed protection 87
54.10 Autotransformer 87
54.11 Evaluation of reduced spacings on printed-wiring boards 88
54.12 Reverse polarity test 88
55 Flanged Bobbin Transformer Abnormal Test 89
56 Capacitor Test 90

AVA Documents
Document Sharing Hub
Full document details: UL 1012 2021

57 Bonding Conductor Test....91
58 Hot, Flaming Oil Test....92

MANUFACTURING AND PRODUCTION TESTS

59 Dielectric Voltage Withstand Test....92
60 Grounding Continuity Test....94

MARKING

61 Details....94
61.1 Cautionary markings....94
61.2 General markings....96
61.3 Application....101
62 Instructions....101
62.1 General....101
62.2 Battery chargers....102

SPECIFIC POWER UNITS

OUTDOOR-USE POWER UNITS

63 General....103
64 Construction....104
64.1 Enclosure....104
64.2 Supply connections....105
64.3 Output connections and wiring....106
65 Performance....106
65.1 Rain conditioning....106
65.2 Physical properties....110
66 Marking....110

PLUG-IN POWER UNITS

67 General....110
68 Construction....110
69 Performance....110
70 Marking....111

SCHOOL-LABORATORY POWER SUPPLIES

71 General....111
72 Construction....111
72.1 Primary power supply connections....111
72.2 Grounding....111
72.3 Output terminals....111
73 Performance....111
74 Marking....112

POWER SUPPLIES RATED MORE THAN 10 KILOVOLT-AMPERES

75 General....112
76 Temperature Test....112
77 Dielectric Voltage Withstand Test....112

AVA Documents
Document Sharing Hub
Full document details: UL 1012 2021

77.1 General ... 112
77.2 Induced potential ... 113
78 Overload Test ... 113

CLASS 3 OUTPUTS – DC, OR AC DERIVED FROM NON-LINEAR SOURCES

79 General ... 114
80 Construction ... 114
81 Overcurrent Protection ... 114
82 Components ... 114
83 Maximum Output Voltage Test ... 115
84 Output Current and Power Test ... 115
84.1 General ... 115
84.2 Inherently limited ... 115
84.3 Not inherently limited ... 116
85 Calibration of Overcurrent Protection Devices Test ... 117
86 Component Breakdown ... 117
87 Markings ... 117

FOREIGN VOLTAGE ADAPTERS

88 General ... 118
89 Scope ... 118
90 Glossary ... 118
91 U.S. to Foreign Adapters ... 118
91.1 Construction ... 118
91.2 Performance ... 119
91.3 Electrical ratings ... 119
91.4 User instructions ... 120
92 Foreign to U.S. Adapters ... 120
92.1 Construction ... 120
92.2 Performance ... 121
92.3 Electrical ratings ... 122
92.4 User instructions ... 122

RECHARGEABLE BATTERIES WITH INTEGRAL CHARGERS

93 Scope ... 122
94 Glossary ... 122
95 General ... 123
96 Construction ... 123
96.1 Enclosure ... 123
96.2 Battery ... 123
96.3 RBP's with a lithium battery ... 123
96.4 Supply connections ... 124
96.5 Solar cell protection ... 124
97 Performance ... 124
97.1 Power input test ... 124
97.2 Normal temperature test ... 124
97.3 Solar cell reverse current overload test ... 125
97.4 Mechanical strength tests ... 126
98 Markings ... 126
99 Instructions ... 126

Documents
Document Sharing Hub
Full document details: UL 1012 2021

POWER UNITS FOR INSTALLATION IN AIR-HANDLING SPACES

100 Scope 127
101 General 127
102 Marking 127

APPENDIX A

Standards for Components 128

Documents
Document Sharing Hub
Full document details: UL 1012 2021

No Text on This Page

Documents
Document Sharing Hub

Full document details: UL 1012 2021

INTRODUCTION

1 Scope

1.1 These requirements cover portable, stationary, and fixed power units having an input rating of 600 volts or less, direct- and alternating- current, with at least one output not marked Class 2, and that are intended to be employed in ordinary locations in accordance with the National Electrical Code, ANSI/NFPA 70.

1.2 These requirements cover general purpose power supplies and power supplies for uses such as to supply some household appliances, school laboratories, cathodic protection equipment; power supply-battery charger combinations; and industrial equipment, including inverters, divided into two classes – those rated 10 kilovolt-amperes or less and those rated more than 10 kilovolt-amperes.

1.3 Power units with all outputs identified as Class 2 are covered under the Standard for Class 2 Power Units, UL 1310.

1.4 These requirements do not cover the following types of battery chargers:

a) Battery chargers intended to charge motor-starting batteries as covered by Standard for Battery Chargers for Charging Engine-Starter Batteries, UL 1236;

b) Battery chargers for charging industrial batteries which power material handling trucks, tractors, personnel carriers, and similar motive equipment, as covered by the Standard for Industrial Battery Chargers, UL 1564;

c) Chargers or charging functions incorporated into converter or inverters for use in recreational vehicles and boats, as covered by the Standard for Power Converters/Inverters and Power Converter/Inverter Systems for Land Vehicles and Marine Crafts, UL 458; and

d) Charge controllers or charging functions incorporated into equipment for use in independent power systems, as covered by the Standard for Inverters, Converters, Controllers and Interconnection System Equipment for Use With Distributed Energy Resources, UL 1741.

1.5 A battery charger not wholly within the scope of one of the standards specified in 1.4 shall be investigated to the requirements of this Standard supplemented by the applicable requirements of whichever of the standards in 1.4 is most applicable.

1.6 These requirements do not cover a power supply for a fire-protective or burglary-protective signaling system, electrostatic-air cleaning equipment, recreational vehicles, electric discharge or neon tubing, test equipment for commercial or industrial laboratories; or an appliance or system in which the power supply is used.

1.7 These requirements cover power supplies for centralized ac or dc power systems, including dc power supplies, rectifiers, and the like, that form part of these systems.

1.8 A power supply that is intended for use with a specific type of product other than as referenced in 1.2 is investigated under the standard for that end product.

1.9 These requirements do not cover the effect that a power supply may have on an equipment or a system to which it is connected.

1.10 A power system, the primary function of which is maintaining continuity of an alternating power source in case of input power failure, is covered under the Standard for Uninterruptible Power Systems, UL 1778.

AVA Documents
Document Sharing Hub
Full document details: UL 1012 2021

2 Components

2.1 Except as indicated in 2.2, a component of a product covered by this standard shall comply with the requirements for that component. See Appendix A for a list of Standards covering components used in the products covered by this Standard.

2.2 A component is not required to comply with a specific requirement that:

a) Involves a feature or characteristic not required in the application of the component in the product covered by this standard, or

b) Is superseded by a requirement in this standard.

2.3 A component shall be used in accordance with its rating established for the intended conditions of use.

2.4 Specific components are incomplete in construction features or restricted in performance capabilities. Such components are intended for use only under limited conditions, such as certain temperatures not exceeding specified limits, and shall be used only under those specific conditions.

3 Units of Measurement

3.1 Values stated without parentheses are the requirement. Values in parentheses are explanatory or approximate information.

4 Terminology

4.1 Unless otherwise stated, values of current and voltage are root-mean-square (rms).

4.2 The term "product" as used in these requirements refers to all power units or any part thereof covered by these requirements unless specifically noted otherwise.

4.3 The term "power unit" as used in these requirements refers to all power supplies, battery chargers, and transformers covered by these requirements.

5 Undated References

5.1 Any undated reference to a code or standard appearing in the requirements of this standard shall be interpreted as referring to the latest edition of that code or standard.

6 Glossary

6.1 For the purpose of this standard the following definitions apply.

6.2 BATTERY, SEALED – A battery that has no provision for the addition of water or electrolyte or for external measurement of electrolyte specific gravity.

6.3 BATTERY, VALVE-REGULATED – A battery in which the venting of the products of electrolysis is controlled by a reclosing pressure-sensitive valve. These batteries have commonly been referred to as "maintenance-free, starved electrolyte."

6.4 BATTERY, VENTED – A battery in which the products of electrolysis and evaporation are allowed to escape freely to the atmosphere. These batteries have commonly been referred to as "flooded."

AVA Documents
Document Sharing Hub
Full document details: UL 1012 2021

6.5 CLASS 2 OUTPUT – An output complying with the requirements for Class 2 Output Circuits. See 38.1.

6.6 CLASS 3 OUTPUT – An output having limited voltage and energy capacity and complying with the requirements for Class 3 Output Circuits. See 38.2. See also the Maximum Output Voltage Test, Section 83, and the Output Current and Power Test, Section 84.

6.7 CONDUCTIVELY CONNECTED – A part connected to another part such that the current through a 1500 ohm resistor connected between the parts exceeds 5 mA rms or 7.07 mA peak.

6.8 CONTROLLED ENVIRONMENT – An environment that is relatively free of conductive contaminants, such as carbon dust and the like that may result from the end-use equipment that the power unit will be installed with or that may be due to the location of the end-use equipment, and that is provided with protection against humidity and the formation of condensation. A temperature and humidity controlled indoor area free of conductive contaminants, is considered to be a controlled environment. An equivalent environment may be provided within the enclosure of an appliance by means of:

a) A hermetically sealed enclosure;

b) Encapsulation;

c) A conformal coating;

d) A gasketed, tight-fitting enclosure; or

e) A filter system reducing the level of contamination in conjunction with a system reducing the level of condensation (for example, maintaining the surrounding air at constant temperature and low relative humidity).

6.9 DIRECT CURRENT (DC) – A voltage or current waveform where voltage across two points does not change polarity, and the current through a conductor does not change direction.

6.10 ELECTRICAL ENERGY – HIGH CURRENT LEVELS – The capability for damage or injury to persons (other than by electric shock) from available electrical energy is considered to exist, if between a live part and an adjacent dead metal part or between live parts of different polarity, there exists a potential of 2 volts or more and either:

a) An available continuous power level of 240 volt-amperes or more; or

b) A reactive energy level of 20 joules or more.

For example, a tool, or other metal short-circuiting a component can cause a burn or a fire if enough energy is available at the component to vaporize, melt, or more than warm the metal.

6.11 ENERGY LIMITING CIRCUIT/IMPEDANCE – A circuit or component depended on to limit an output to Class 3 levels. Reliability of circuit components shall be determined unless the unit is tested as specified in 87.1.

6.12 INTENDED FOR USE BY TRAVELERS – A multiple voltage rated direct plug-in power unit with a 125 V 15 A (parallel) input blade configuration, or a multiple voltage rated cord-connected power unit with a non-detachable power supply cord terminating in a 125 V 15 A (parallel) blade plug.

6.13 ISOLATED LIMITED-ENERGY CIRCUIT – A circuit derived from an isolated secondary winding of a transformer having a maximum capacity in accordance with Section 51 and an open-circuit secondary voltage rating not exceeding 1000 volts. A circuit derived from a line-voltage source or supply by

AVA Documents
Document Sharing Hub
Full document details: UL 1012 2021

connecting resistance in series with the supply circuit as a means of limiting the voltage and current is not considered to be an isolated limited-energy circuit.

6.14 LINE-VOLTAGE CIRCUIT – Wiring and components that are conductively connected to a branch circuit.

6.15 LOW VOLTAGE LIMITED ENERGY (LVLE) CIRCUIT – A circuit involving a potential of not more than 42.4 volts peak or 60 V dc with limited energy as described in 36.5 – 36.13.

6.16 MULTIPLE VOLTAGE RATED POWER UNIT – A power unit with a rated voltage range (such as 100 – 240 volts) or a power unit with more than one discrete voltage rating (such as 120/240 volts).

6.17 POWER UNIT, COMMERCIAL – A power unit other than the household type as defined in 6.18.

6.18 POWER UNIT, FIXED – A power unit that is intended to be permanently connected electrically.

6.19 POWER UNIT, HOUSEHOLD – A power unit intended for use with equipment found in the home.

6.20 POWER UNIT, PORTABLE – A cord and plug connected power unit that:

a) Has no provision for permanent mounting; and

b) Can be moved easily from one place to another for use.

6.21 POWER UNIT, STATIONARY – A cord and plug connected power unit that is intended to be fastened in place or located in a dedicated space.

6.22 RISK OF ELECTRIC SHOCK – A risk of electric shock is considered likely to occur at any part if the potential between the part and earth ground or any other accessible part is more than 30 volts rms, 42.4 volts peak, or 60 V dc, and the continuous current flow through a 1500-ohm resistor exceeds 5 milliamperes.

6.23 RISK OF INJURY – A risk of injury to persons is considered likely to occur if one or more of the following conditions exist:

a) If power-operated moving parts such as gears and linkages are accessible during intended operation and are capable or causing a cut or laceration.

b) If sharp edges, burrs, or projections are present that can cause injury during use or servicing.

c) If the stability of a product is such that it can cause injury to persons. See Stability Test, Section 50.

d) If there is likelihood that a part of the body could be endangered or that clothing would be entangled by the moving part resulting in an injury.

The words "injury to persons" are in reference to physical harm to persons other than the physiological effects of electric shock.

6.24 SPECIAL APPLICATION BATTERY CHARGER – A battery charger intended to charge batteries employed in wheel chairs or other similar types of mobility aids.

6.25 TOOL – A screwdriver, coin, key, or any other object that may be used to operate a screw, latch, or similar fastening means.

Documents
Document Sharing Hub
Full document details: UL 1012 2021

ALL POWER UNITS

CONSTRUCTION

7 Frame and Enclosure

7.1 General

7.1.1 A power unit shall be formed and assembled so that it has the strength and rigidity necessary to resist the abuses to which it is subjected, without increasing the risk of fire, electric shock, or injury to persons due to total or partial collapse which results in a reduction of spacings, loosening or displacement of parts, or other serious defects.

7.1.2 A power unit shall be provided with an enclosure to house all parts other than the power supply cord or primary connector and the output leads or output connector that present a risk of fire, electric shock, or injury to persons under any condition of use.

7.1.3 A cast- or sheet-metal section of the enclosure shall have a thickness not less than that specified in Table 7.1.

Exception: A part of an enclosure that complies with the Mechanical Strength Tests for Metal Enclosures, Section 45, need not comply with the thickness specified in Table 7.1.

Table 7.1
Minimum acceptable thickness of enclosure metal

Metal	At small, flat, unreinforced surfaces and at surfaces of a shape or size to provide adequate mechanical strength		At surfaces to which a wiring system is to be connected in the field		At relatively large unreinforced flat surfaces	
	Inches	(mm)	Inches	(mm)	Inches	(mm)
Die-cast	3/64	(1.2)	–	–	5/64	(2.0)
Cast malleable iron	1/16	(1.6)	–	–	3/32	(2.4)
Other cast metal	3/32	(2.4)	–	–	1/8	(3.2)
Uncoated sheet steel	0.026	(0.66)	0.032	(0.81)	0.026	(0.66)
Galvanized sheet steel	0.029	(0.74)	0.034	(0.86)	0.029	(0.74)
Nonferrous sheet metal other than copper	0.036	(0.91)	0.045	(1.14)	0.036	(0.91)
Copper	0.033	(0.84)	0.043	(1.09)	0.033	(0.84)

7.1.4 An enclosure or part of an enclosure that also serves as a compartment for a rechargeable vented battery shall be ventilated to permit dispersion of gases from the battery.

7.1.5 In addition to the criteria specified in this Standard, the following factors are to be considered when judging the suitability of a polymeric enclosure:

a) Moisture absorptive properties;

b) Material flammability properties; and

c) Resistance to arcing properties.

Documents
Document Sharing Hub
Full document details: UL 1012 2021

These properties shall comply with the requirements in the Standard for Polymeric Materials – Use in Electrical Equipment Evaluations, UL 746C. See also 39.4.

7.1.6 A conductive coating applied to a nonmetallic surface such as the inside surface of a cover, enclosure, and the like shall comply with the appropriate requirements in the Standard for Polymeric Materials – Use in Electrical Equipment Evaluations, UL 746C, unless it can be determined that flaking or peeling of the coating does not result in a reduction of spacings or the bridging of live parts that may result in a risk of fire, electric shock, or injury to persons.

7.1.7 The enclosure of a power unit shall prevent molten metal, burning insulation, flaming particles, or the like from falling on combustible materials, including the surface upon which the power unit is supported. A barrier as mentioned in 7.1.10 shall:

a) Be horizontal;

b) Comply with Figure 7.1; and

c) Comply with 7.1.8 if it is made of a polymeric material.

Openings for drainage, ventilation, and the like may be employed in the barrier provided such openings do not permit molten metal, burning insulation, or the like, to fall on combustible material.

Documents
Document Sharing Hub

Full document details: UL 1012 2021

Figure 7.1

Location and extent of barrier

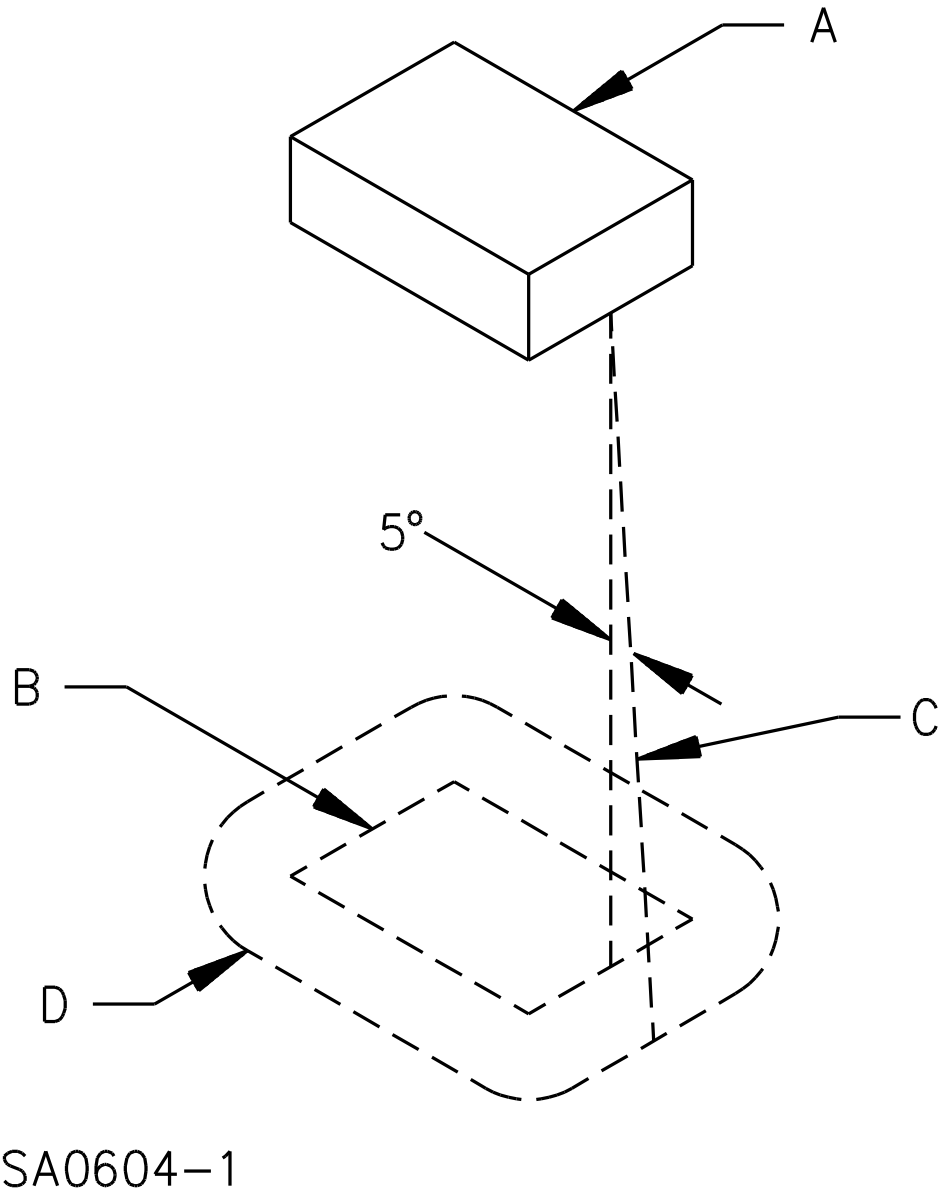

A – Region to be shielded by barrier. This will consist of the entire component if it is not otherwise shielded and will consist of the unshielded portion of a component that is partially shielded by the component enclosure or equivalent.

B – Projection of outline of component on horizontal plane.

C – Inclined line that traces out minimum area of barrier. The line is always:

1) Tangent to the component,

2) 5 degrees from the vertical, and

3) So oriented that the area traced out on a horizontal plane is maximum.

D – Location (horizontal) and minimum area for barrier. The area is that included inside the line of intersection traced out by the inclined line C and the horizontal plane of the barrier.

Documents
Document Sharing Hub
Full document details: UL 1012 2021

7.1.8 With reference to 7.1.7, a barrier made of a polymeric material shall:

a) Have a flammability classification of V-1 or better in accordance with the Standard for Tests for Flammability of Plastic Materials for Parts in Devices and Appliances, UL 94; and

b) Comply with the requirements for physical barriers specified in the Standard for Polymeric Materials – Use in Electrical Equipment Evaluations, UL 746C.

7.1.9 The requirement in 7.1.7 necessitates that a switch, a relay, a solenoid, or the like, be completely and individually enclosed, unless it can be shown that:

a) Malfunction of the component does not result in a risk of fire; or

b) There are no openings in the enclosure through which molten metal, burning insulation, flaming particles or the like could fall.

Exception No. 1: This requirement does not apply to terminals.

Exception No. 2: Ventilation openings may be provided in the bottom of an enclosure if the openings incorporate a perforated metal plate as described in Table 7.2; a galvanized or stainless steel screen having a 14- by 14-mesh per inch (25.4-mm) constructed of wire with a diameter of 0.018 inch (0.5 mm) minimum; or other construction complying with the Hot, Flaming Oil Test, Section 57.

Table 7.2
Perforated metal plates for enclosure bottom

Minimum thickness		Maximum diameter of holes		Minimum spacings of holes center to center	
inch	(mm)	inch	(mm)	inch	(mm)
0.026	(0.66)	0.045	(1.14)	0.067	(1.70)
				233 holes per inch^2 (645 mm^2)	
0.026	(0.66)	0.047	(1.19)	0.093	(2.36)
0.030	(0.76)	0.045	(1.14)	0.067	(1.70)
0.030	(0.76)	0.047	(1.19)	0.093	(2.36)
0.032	(0.81)	0.075	(1.91)	0.125	(3.18)
				72 holes per inch^2 (645 mm^2)	
0.035	(0.89)	0.075	(1.90)	0.125	(3.18)
0.036	(0.91)	0.063	(1.60)	0.109	(2.77)
0.036	(0.91)	0.078	(1.98)	0.125	(3.18)
0.039	(0.99)	0.063	(1.60)	0.109	(2.77)
0.039	(0.99)	0.079	(2.00)	0.118	(3.00)
NOTE – In accordance with Exception No. 2 to 7.1.9.					

7.1.10 With regard to 7.1.7, if openings in the enclosure are provided, it will also necessitate the use of a barrier:

a) Under wire, unless it is of the flame-retardant type, such as neoprene- or thermoplastic-insulated wire; and

b) Under a fuse, unless a complete, unventilated enclosure is provided for each fuse.

Exception: A barrier is not needed under:

Documents
Document Sharing Hub
Full document details: UL 1012 2021

a) A supplementary fuse;

b) A fuse connected in a Class 2 circuit;

c) An individually enclosed fuse such as an extractor fuse; or

d) A fuse within a complete unventilated enclosure.

Consideration will be given to a fuse enclosed within a transformer winding.

7.1.11 A compartment or part of an enclosure that contains field-wiring splices in other than a Class 2 circuit shall not be provided with ventilating openings.

7.1.12 Glass or thermoplastic covering an opening for user servicing, such as replacing a pilot lamp, and enclosing live parts that are guarded in accordance with 7.6.3, 7.6.4, or 9.1.4 shall be securely retained in place, and shall comply with:

a) Mechanical Strength Tests for Metal Enclosures, Section 45;

b) Abnormal Tests, Section 54; and

c) Flammability tests for thermoplastic enclosures as specified in 7.1.5.

7.1.13 The operating handle of a circuit breaker, the operating button of a manually-operable protector, the capped portion of an extractor-type fuseholder, or a similar part may project outside the enclosure.

7.2 Mounting means

7.2.1 A power unit intended to be fastened in place shall have a means for securely mounting it in position. Bolts, screws, and other parts used for mounting the power unit shall be independent of those used for securing components.

7.2.2 A portable power unit intended for wall mounting shall employ a keyhole slot or the equivalent as a mounting means.

7.2.3 A barrier or the equivalent may be used to prevent wall-mounting screws from projecting into a compartment containing electrical parts and reducing spacings to less than that specified in Spacings, Section 35.

7.2.4 Mounting instructions shall be furnished with each power unit designed for permanent mounting. If special hardware is required, it shall be provided by the manufacturer.

7.3 Integral meters

7.3.1 If an electrical instrument, such as a meter, forms part of the enclosure, the face or the back of the instrument housing, or both together, shall comply with the requirements for an enclosure.

Exception No. 1: An electrical instrument connected in a secondary circuit need not comply with the requirements for an enclosure if damage or deterioration of the materials comprising the housing does not result in a risk of fire or electric shock.

Exception No. 2: This requirement does not apply to a meter as described in 7.3.2.

7.3.2 A panel mounted analog meter shall comply with the Standard for Electrical Analog Instruments – Panelboard Types, UL 1437.

AVA Documents
Document Sharing Hub

Full document details: UL 1012 2021

Exception: An analog meter connected to an isolated circuit of not more than 42.4 V peak or 60 V dc need not comply if the meter housing does not constitute part of the power unit enclosure.

7.4 Supporting material

7.4.1 Material supporting terminals or used as internal electrical insulation of an electrical instrument shall comply with Insulating Materials, Section 24.

Exception: This requirement does not apply to an electrical instrument connected in a secondary circuit if damage to or deterioration of the materials does not result in a risk of fire or electric shock.

7.4.2 Supporting feet of a power unit that form part of the enclosure or that are needed for ventilation shall be reliably secured in place and the aging, physical, and flammability properties of the material shall be investigated. A rubber or neoprene material shall comply with the physical properties test requirements in 65.2.1.

Exception: This requirement does not apply to a power unit subjected to the Temperature Test, Section 42, with the supporting means removed. See 42.9.

7.4.3 An adhesive used to attach a cover to a power unit shall be investigated with respect to exposure to environmental conditions, such as high and low temperatures, high and low humidity, and the like, to determine its ability to retain the cover in position.

Exception: Methods utilizing fusion techniques, such as solvent cementing, ultrasonic welding, electromagnetic induction, and thermal welding are not required to be investigated.

7.5 Doors and covers

7.5.1 A door or cover that provides access to a live part that can cause electric shock shall be securely held in place so that it can be opened or removed only by using a tool.

Exception: A door or cover that provides access to a live part that does not involve risk of electric shock shall be securely held in place, but need not be secured so that it is necessary to use a tool to open or remove it.

7.5.2 A door or cover of an enclosure shall be hinged or attached in an equivalent manner if:

a) It provides access to an overload-protective device the intended functioning of which requires renewal; or

b) It is necessary to open the cover in connection with intended operation of the protective device.

A door or cover providing access to a fuseholder shall be tight-fitting and shall be positively held closed. See 28.1.

Exception: A hinged cover is not required if the only overload-protective devices enclosed are:

a) Connected in control circuits, provided the protective devices and the circuit loads are within the same enclosure;

b) Rated 2 amperes or less for loads not exceeding 100 volt-amperes;

c) Extractor fuses having an integral enclosure;

d) Fuses connected in a low-voltage limited energy circuit; or

Documents
Document Sharing Hub
Full document details: UL 1012 2021

e) In accordance with the Exception to 29.1.

7.6 Protection against injury to persons

7.6.1 If operation, maintenance, or reasonably foreseeable misuse of a power unit by the user involves a risk of injury to persons, protection shall be provided to reduce such risk to an acceptable degree.

7.6.2 Specific service functions of a power unit that are not intended to be performed shall be given appropriate consideration.

7.6.3 A part capable of causing injury to persons shall be enclosed or guarded.

7.6.4 A rotating member, such as a fan blade, the breakdown of which could result in a risk of injury to persons, shall be enclosed or guarded to reduce the likelihood of injury.

7.6.5 With reference to 7.6.3, a part that is within the enclosure or casing of the power unit and that cannot be contacted by the probe illustrated in Figure 8.1 is considered to be acceptably guarded. An opening in a guard shall not exceed 1 inch (25.4 mm) in diameter.

7.6.6 A cover or guard for a moving part that involves a risk of injury to persons – such as a fan blade – is to be arranged so that if it is removed, it must be replaced before intended operation of the power unit. Other features of a cover or guard to be considered include:

a) Removability without the use of a tool;

b) Removability for servicing;

c) Strength and rigidity;

d) Completeness; and

e) Creation of additional risks of injury such as pinch points during servicing, replacement of fuses, and maintenance.

Exception: A commercial or power unit may be provided with a marking – in lieu of other means – located adjacent to the part being guarded, to instruct the user that the cover or guard should be replaced before intended operation of the power unit. See 61.1.14.

7.6.7 A rotating or moving part that creates a risk of injury to persons if it should become disengaged shall be provided with a positive means to retain it in place under conditions of use.

7.6.8 An enclosure, a frame, a guard, a handle, or the like shall not be sharp enough to cause a risk of injury to persons in normal maintenance or use.

Exception: This requirement does not apply to a sharp edge that might be exposed to enable the power unit to perform its intended function.

7.7 Modular units

7.7.1 Individual modules of a modular unit may be of the open construction – either no enclosure or a partial enclosure is supplied – provided that when the modules are assembled together in the field as intended, the unit complies with the requirements of this Standard. Identification of the modules and instructions for assembling shall be provided in accordance with 61.2.22 and 62.1.11. The provisions for electrical connection between modules shall comply with Section 14, Interconnections Between Sections.

AVA Documents
Document Sharing Hub
Full document details: UL 1012 2021

8 Accessibility of Uninsulated Live Parts, Film-Coated Wire, and Moving Parts

8.1 An opening in the enclosure of a power unit shall not permit entrance of a 1-inch (25.4-mm) diameter rod. A smaller opening is acceptable if a probe as illustrated in Figure 8.1, when inserted through the opening, cannot be made to touch any uninsulated live part that may involve a risk of electric shock, film-coated wire that may involve a risk of electric shock, or moving part that may involve a risk of injury to persons.

8.2 The probe illustrated in Figure 8.1 is to be applied to any depth that the opening permits and with a force not greater than 1 pound (4.4 N), and is to be rotated or angled before, during, and after insertion through the opening to any position that is necessary to examine the power supply. The probe is to be applied in any possible configuration, and, if necessary, the configuration is to be changed after insertion through the opening.

Documents
Document Sharing Hub
Full document details: UL 1012 2021

Figure 8.1

Articulate probe with web stop

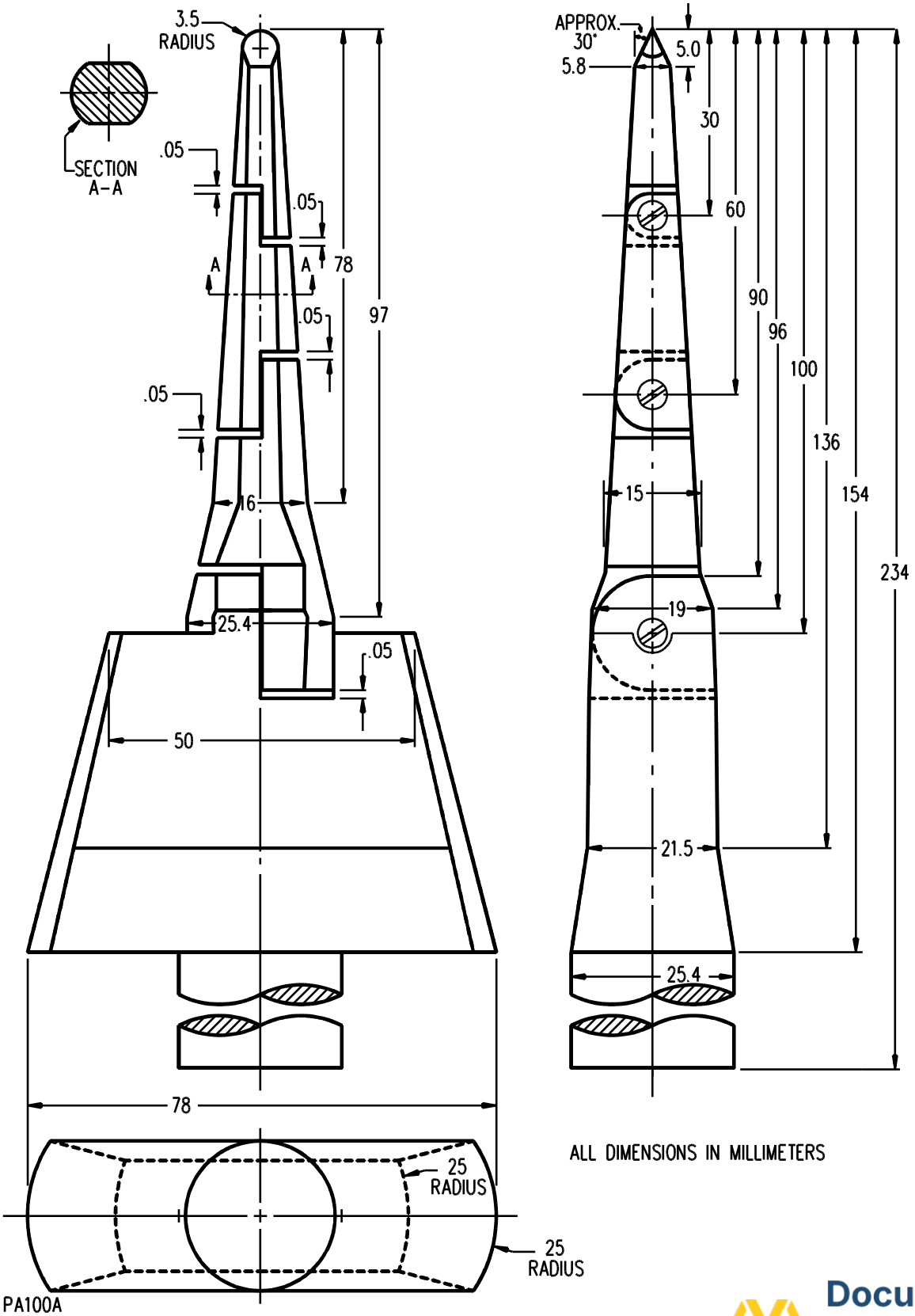

Documents
Document Sharing Hub
Full document details: UL 1012 2021

8.3 A guard, baffle, or cover that can be removed without using a tool is to be removed when determining if a part is accessible to the user. A part that can be contacted by the probe illustrated in Figure 8.1 when inserted through an opening in a permanently-attached guard or baffle is considered to be accessible.

8.4 A part on the back of a component mounting panel and a part located such that it requires major disassembly by using a tool are not considered to be accessible to the user; such parts are not considered accessible to the service personnel unless it is likely that servicing will be done while the parts are energized after disassembly.

8.5 An uninsulated live part that can cause electric shock shall be located or enclosed so that protection against unintentional contact is provided.

9 Protection of Service Personnel

9.1 General

9.1.1 These requirements apply to live parts used in circuits involving a risk of electric shock.

9.1.2 Live parts shall be so arranged and covers so located as to reduce the risk of electric shock when covers are being removed and replaced.

9.1.3 Consideration shall be given to a construction in which live parts are recessed at least 1/8 inch (3.2 mm) from the plane of the front of the fixed portion of the enclosure, and to an equivalent construction incorporating projections or guards.

9.1.4 An uninsulated live part involving a risk of electric shock and a moving part that involves a risk of injury to persons shall be located, guarded, or enclosed to reduce the likelihood of unintentional contact with such part by persons while changing a lamp or fuse, lubricating a motor, adjusting a control, or performing other like operations, including those performed only at the time of installation or during servicing procedures.

9.1.5 A live heat sink for a solid-state component, a live relay frame, a live part that can be mistaken for dead metal, and the like shall comply with the requirements in 9.2.2 and 9.3.1. Such a part shall also either be guarded to prevent contact by persons or be marked in accordance with 61.1.2.

Exception: This requirement does not apply to a heat sink mounted on a printed wiring board.

9.1.6 A means such as a bleeder resistor shall be provided to drain the charge stored in a capacitor to the extent that the potential, V, measured between the terminals of the capacitor 1 minute after the capacitor has been disconnected from its source of energy is less than 50 volts, and the energy stored, J, is less than 20 joules as determined by the following relation, in which C is in microfarads:

$$J = 5 \times 10^{-7}\ CV^2$$

Exception: The requirement does not apply if a tool is necessary to remove a panel to reach the capacitor and the power unit is marked to warn service personnel as specified in 61.1.15.

9.2 Mechanical servicing

9.2.1 The requirements in 9.2.2 are intended to provide a reasonable degree of protection to the service personnel performing mechanical functions on energized equipment. Such functions do not in themselves require exposure to live parts involving a risk of electric shock or to moving parts that involve a risk of injury to persons, but it is usually necessary to perform them with the equipment energized.

AVA Documents
Document Sharing Hub
Full document details: UL 1012 2021

9.2.2 An uninsulated live part involving a risk of electric shock and a moving part that involves a risk of injury to persons shall be located, guarded, or enclosed to prevent unintentional contact by service personnel adjusting or resetting controls, and the like, or performing mechanical service functions that may be performed with the equipment energized, such as lubricating a motor, adjusting the setting of a control with or without marked dial settings, resetting a trip mechanism, or operating a manual switch.

9.2.3 An adjustable or resettable electrical control or manual switching device may be located or oriented with respect to uninsulated live parts so that manipulation of the mechanism for adjustment, resetting, or operation can be accomplished in the normal direction of access if uninsulated live parts:

a) Are not located in front – in the direction of access – of the mechanism; and

b) Are not located near any side or behind the mechanism, unless guarded.

Exception: This requirement does not apply to an uninsulated live part not involving a risk of electric shock.

9.3 Electrical servicing

9.3.1 An electrical component that may require examination, adjustment, servicing, or maintenance while energized shall be so located and mounted with respect to other components and with respect to grounded metal parts that it is accessible for electrical service functions without subjecting service personnel to the likelihood of electric shock or risk of injury to persons. Access to components in a power unit is not to be impeded by other components or by wiring in the direction of access.

9.3.2 Protection against the risk of electric shock and injury to persons may be obtained by mounting control components so that unimpeded access to each component is provided by an access cover or panel in the outer cabinet.

9.3.3 The electrical components referred to in 9.3.1 and 9.3.2 include the following: fuses, adjustable or resettable overload relays, magnetically operated relays, manual-switching devices, clock timers, and incremental voltage taps. Such components in a limited-energy circuit of 30 volts rms or less as defined in 6.13 and 6.15 shall comply with the requirements in 9.3.1 with respect to uninsulated live parts in a circuit of greater energy level and to moving parts involving a risk of injury to persons.

9.3.4 The following are not considered to be uninsulated live parts: coils and windings of relays, solenoids, and transformers that are provided with acceptable insulating overwraps at least 1/32 inch (0.8 mm) thick, or the equivalent; enclosed motor windings; terminals and splices with acceptable insulation; and insulated wire.

10 Assembly

10.1 An uninsulated live part shall be secured to the base or surface so that it is prevented from rotating or shifting in position as the result of stresses if such movement results in a reduction of spacings below the minimum acceptable values.

10.2 A component such as a control switch, a lampholder, an attachment-plug receptacle, or a plug connector shall be mounted securely and shall be prevented from turning by means other than friction between surfaces.

Exception No. 1: A switch need not comply with this requirement if all of the following conditions are met:

a) The switch is a plunger or other type that does not tend to rotate when operated – a toggle switch is considered to be subject to forces that tend to turn the switch;

b) The means for mounting the switch makes it unlikely that operation of the switch will loosen it;

Documents
Document Sharing Hub
Full document details: UL 1012 2021

c) Spacings are not reduced below the minimum acceptable values if the switch rotates; and

d) Intended operation of the switch is by mechanical means rather than by direct contact by persons.

Exception No. 2: A lampholder of the type in which the lamp cannot be replaced, such as a sealed neon pilot or indicator light, need not comply with this requirement if rotation cannot reduce spacings below the minimum acceptable value.

10.3 A small stem-mounted device having a single-hole mounting may be prevented from rotating by a properly applied lock washer.

11 Protection Against Corrosion

11.1 Iron and steel parts shall be protected against corrosion by enameling, painting, galvanizing, plating, or an equivalent means.

Exception No. 1: This requirement does not apply to bearings, laminations, and other parts of iron or steel such as washers and screws.

Exception No. 2: A part need not be protected against corrosion if the corrosion of the part does not result in a risk of fire, electric shock, or injury to persons.

12 Supply Connections

12.1 Permanently-connected power units

12.1.1 A fixed power unit shall have provision for the connection of a wiring system.

12.1.2 A knockout in a sheet-metal enclosure shall be secured and shall be removable without undue deformation of the enclosure.

12.1.3 A knockout shall be surrounded by a flat surface to accommodate for seating of a conduit bushing or locknut of the appropriate size.

12.1.4 If threads for the connection of conduit are tapped all the way through a hole in an enclosure wall, or if an equivalent construction is employed, there shall not be less than three nor more than five full threads in the metal, and the construction of the device shall be such that a conduit bushing can be properly attached.

12.1.5 If threads for the connection of conduit are not tapped all the way through a hole in an enclosure wall, conduit hub, or the like, there shall not be less than 3-1/2 threads in the metal and there shall be a smooth, rounded inlet hole for the conductors that shall afford protection to the conductors equivalent to that provided by a standard conduit bushing and that shall have an internal diameter approximately the same as that of the corresponding trade size of rigid conduit.

12.1.6 For an enclosure not provided with conduit openings or knockouts, spacings not less than the minimum required in this standard shall be provided between uninsulated live parts and a conduit bushing installed at any location likely to be used during installation. Permanent marking on the enclosure, a template, or a full-scale drawing furnished with the power unit may be used to limit such a location.

12.1.7 A field-wiring compartment in which power unit connections are to be made shall be located so that the connections may be readily inspected after the power unit is installed as intended.

Documents
Document Sharing Hub
Full document details: UL 1012 2021

12.1.8 A field-wiring compartment intended for connection of a wiring system shall be attached to the power unit so that it is prevented from turning.

12.1.9 An outlet box, terminal box, wiring compartment, or the like in which connections to the power unit circuit are made in the field shall be free from any sharp edge, including screw threads, a burr, a fin, a moving part, or the like, that may abrade the insulation on conductors or otherwise damage the wiring.

12.2 Wiring terminals and leads

12.2.1 The field-wiring terminals mentioned in 12.2.2 – 12.2.12 are terminals to which supply, control, output, or other permanent connections are made in the field when the power unit is installed.

12.2.2 Field-wiring terminals or leads shall be sized for the connection of conductors having an ampacity appropriate for the rating of the power unit.

12.2.3 A wiring terminal shall be provided with a pressure terminal connector securely fastened in place – for example, firmly bolted or held by a screw.

Exception No. 1: A wire-binding screw may be employed at a wiring terminal intended for connection of a 10 AWG (5.3 mm^2) or smaller conductor if upturned lugs or the equivalent are provided to hold the wire in position.

Exception No. 2: A wiring terminal need not be provided with a pressure terminal connector if the terminal is intended for connection of a 8 AWG (8.4 mm^2) or larger conductor, and the power unit complies with the requirements in 12.2.11.

12.2.4 A wiring terminal shall be prevented from turning or shifting in position by a means other than friction between surfaces. This may be accomplished by two screws or rivets; by square shoulders or mortises; by a dowel pin, lug or offset; by a connecting strap or clip fitted into an adjacent part; or by an equivalent method.

12.2.5 A wire-binding screw at a field-wiring terminal shall not be smaller than No. 10 (4.8 mm diameter).

Exception No. 1: A No. 8 (4.2 mm diameter) screw may be used at a terminal intended only for the connection of a 14 AWG (2.1 mm^2) conductor.

Exception No. 2: A No. 6 (3.5 mm diameter) screw may be used for the connection of a 16 AWG (1.3 mm^2) or 18 AWG (0.82 mm^2) control-circuit conductor.

12.2.6 A wire-binding screw shall thread into metal.

12.2.7 A terminal plate tapped for a wire-binding screw shall be of metal not less than 0.050 inch (1.27 mm) thick.

Exception No. 1: A plate not less than 0.030 inch (0.76 mm) may be used if the tapped threads will not strip when subjected to the tightening torque specified in Table 12.1.

Exception No. 2: A plate less than 0.030 inch (0.76 mm) thick may be used in a Class 2 circuit, Class 3 circuit, or an isolated-limited-energy circuit if the tapped threads will not strip when subjected to the tightening torque specified in Table 12.1.

12.2.8 There shall be two or more full threads in the metal of a terminal plate. The metal may be extruded at the tapped hole to provide at least two full threads.

AVA Documents
Document Sharing Hub
Full document details: UL 1012 2021

Exception: Two full threads are not required for a terminal in a Class 2 circuit, Class 3 circuit, or an isolated limited-energy circuit if a lesser number of threads results in a secure connection in which the threads will not strip when subjected to the tightening torque specified in Table 12.1.

Table 12.1
Tightening torque for wire-binding screws

Size of terminal screw, number	Wire sizes to be tested, AWG	Tightening torque	
		Pound-inches	Newton-meters (N·m) or kilogram-meters (kg·m)
6	16 – 22[a]	12	1.4 or 0.14
8	14[b] and 16 – 22[a]	16	1.8 or 0.18
10	10 – 14[b] and 16 – 22[a]	20	2.3 or 0.23

[a] Stranded wire.
[b] Solid wire.

12.2.9 Upturned lugs, a cupped washer, or the equivalent shall be capable of retaining a conductor of the size specified in 12.2.5 under the head of the screw or washer.

12.2.10 The free length of a lead inside an outlet box or wiring compartment shall be 6 inches (152 mm) or more if the lead is intended for field connection to an external circuit.

12.2.11 With reference to Exception No. 2 to 12.2.3, a pressure terminal connector is not required to be provided with a wiring terminal when the following conditions are met:

a) A terminal assembly shall be either:

1) Supplied by the manufacturer – installed or shipped separately; or

2) Specified in a marking on the power unit in accordance with 61.2.15 and 61.2.16.

b) A fastening device, such as a stud, nut, bolt, spring or flat washer, or similar device, as required for an effective installation, shall either be provided as part of the terminal assembly or be mounted on or separately packaged with the power unit.

c) The installation of the terminal assembly shall not involve the loosening or disassembly of parts other than the cover or other part giving access to the terminal location. The means for securing the terminal connectors shall be readily accessible for tightening before and after installation of conductors.

d) When the pressure terminal connector provided in a terminal assembly requires the use of a special tool for securing the conductor, any required instructions shall be included in the assembly package or with the power unit. See 61.2.17.

e) After installation of the pressure terminal connector in the intended manner, the power unit shall comply with the requirements in this standard.

12.2.12 A terminal intended for connection of a grounded power supply conductor shall be made of or plated with metal substantially white in color and shall be readily distinguishable from other terminals.

Exception: This requirement does not apply if proper identification of that terminal is clearly shown in some other manner, such as on an attached wiring diagram.

Documents
Document Sharing Hub
Full document details: UL 1012 2021

12.2.13 The surface of a lead for the connection of a grounded power unit conductor shall be white or grey and shall be readily distinguishable from the other leads.

12.3 Cord-connected power units

12.3.1 A portable or stationary power unit shall be provided with a flexible cord in accordance with Table 12.2 and an attachment plug for connection to the power supply circuit. The supply cord shall be attached permanently to the unit or shall be in the form of a detachable power supply cord with a means for connection to male contacts affixed to the unit. The length of cord external to the power unit and including the attachment plug shall not be less than 6 feet (1.8 m) as measured from the face of the attachment plug to the point of attachment or entry.

Exception No. 1: A power unit weighing 1 pound (454 g) or less need not comply with the cord length requirements if the total length of the input and output cords is 6 feet (1.8 m) or more and the length of the input cord is at least 3 feet (0.91 m).

Exception No. 2: This requirement does not apply to rack mounted power units. See 12.3.2.

Exception No. 3: A power unit marked in accordance with 61.2.20 and provided with instructions in accordance with 62.1.10 need not be provided with the detachable power supply cord.

Exception No. 4: If a power unit is intended for use in a country other than the U.S.A., the detachable power supply cord shall comply with the requirements of the country of destination.

Table 12.2
Acceptable flexible cords for power units[a,b]

Intended use of power unit	Flexible cord type	Maximum length, feet (m)
A. Desk, countertop, rack mounted, or the like	SP-2, SPE-2, SPT-2, SV, SVE, SVT	10 (3)
B. Floor mounted, stationary, or the like	S, SE, SO, SP-3, SPT-3, ST, STO, SJ, SJE, SJO, SJT, SJTO	Not specified

[a] Refer to 12.3.1 and to sections pertaining to specific types of power units.

[b] See 12.3.3.

12.3.2 A rack mounted power unit shall be provided with the shortest length of flexible cord for the purpose.

12.3.3 A stationary power unit intended to be fastened in place may require a form of supply connection that facilitates the interchange of equipment to maintain continuous service or otherwise meet special conditions of use. For such service, a Type S, SE, or equivalent flexible cord may be employed and may be of a length appropriate for the purpose, but no longer than 10 feet (3 m). Normally, a 24 inch (610 mm) length of cord is sufficient for the plug and receptacle connection.

12.3.4 A supply cord shall be:

a) Of a type that is acceptable for the usage; and

b) Acceptable for use at a voltage and ampacity no less than the rated voltage and ampacity of the power unit.

12.3.5 The ampacity of the attachment plug for a power unit intended to be continuously loaded for 3 hours or more shall not be less than 125 percent of the input rating.

AVA Documents
Document Sharing Hub
Full document details: UL 1012 2021

12.3.6 If a unit with a permanently attached power supply cord can be adapted for use on two or more different voltages by field alteration of internal connections, the attachment plug provided with the unit shall be of a type required for the voltage and current for which the unit is shipped from the factory. The power unit shall be provided with instructions as described in 62.1.4.

12.3.7 If a multiple voltage rated power unit is intended for use with a detachable power supply cord, the cord shall be provided with the unit if either of the following apply:

a) The power unit is provided with an operator adjustable voltage selector and complies with 54.5.1; or

b) The power unit is capable of operating at different voltages without user adjustment.

Instructions shall be provided as described in 62.1.5. The power unit shall also be marked in accordance with 62.1.6.

Exception: A power unit marked in accordance with 61.2.20 and provided with instructions in accordance with 62.1.10 need not be provided with the detachable power supply cord.

12.3.8 A power unit intended for use by travelers shall comply with (a) – (e):

a) The power supply input shall be a 125 volt, 15 amp configuration;

b) The power unit shall employ a user adjustable voltage selector and comply with 54.5.1, or be capable of operating at different voltages without user adjustment;

c) The input voltage rating shall include nominal 120 volt;

d) The power unit shall be marked as indicated in 61.2.21; and

e) The power unit shall be provided with instructions per 62.1.7.

12.3.9 In a power unit rated 125 volts or less, 125/250 volts (three-wire) or less, or 277 volts, the screw shell of an Edison-screw-shell lampholder shall be electrically connected to the cord conductor intended to be grounded. A switch or overcurrent-protective device of the single-pole type, other than an automatic control without a marked off position, shall be connected in a circuit to the cord conductor not intended to be grounded.

12.3.10 A power unit shall employ a polarized or grounding-type attachment plug.

12.4 Strain relief

12.4.1 Strain relief shall be provided to prevent mechanical twisting or stress on the supply cord or output cord from being transmitted to terminals, splices, or interior wiring. The means for preventing twisting is to be evaluated by inspection. The suitability of the strain relief is to be evaluated in accordance with 45.1.

12.4.2 A metal strain-relief clamp or band is acceptable without supplementary protection on a Type SV, SVO, SJ, SJE, SJO, S, SO, SJT, SJTO, ST, or STO cord. A metal strain-relief clamp or band is acceptable on a Type SP-2, SPE-2, SPT-2, SVE, SVT, or SVTO cord only if supplementary nonconductive, mechanical protection is provided over the cord.

12.4.3 If a knot in a flexible cord serves as strain relief, the surfaces that the knot may touch shall be free from burrs, fins, sharp edges, and projections that can damage the cord.

Documents
Document Sharing Hub
Full document details: UL 1012 2021

12.4.4 Means shall be provided to prevent the flexible cord or lead from being pushed into the enclosure through the cord-entry hole when such displacement results in:

a) Subjecting the supply cord or lead to mechanical damage;

b) Exposing the supply cord or lead to a temperature higher than that for which it is rated;

c) Reducing spacings (such as to a metal strain-relief clamp) below the minimum required values; or

d) Damaging internal connections or components.

To determine compliance, the supply cord or lead shall be tested in accordance with Section 47, Push-Back Relief Test.

12.5 Bushings

12.5.1 A bushing or the equivalent shall be provided at a point where a flexible cord passes through an opening in a wall, barrier, or enclosing case. The bushing shall be substantial, mechanically secured in place, and shall have a smooth, rounded surface against which the cord may bear. If a Type SP-2, SPE-2, or SPT-2 cord is employed, the wall or barrier is of metal, and the construction is such that the cord may be subjected to stress or motion, the bushing shall be an insulating bushing.

Exception: For a cord hole in wood, porcelain, phenolic composition, or other nonconductive material, a smooth, rounded surface is considered to be the equivalent of an insulating bushing.

12.5.2 Ceramic materials and some molded compositions are acceptable for insulating bushings.

12.5.3 A bushing molded integrally with the supply cord is acceptable on Type SP-2, SPE-2, or heavier cord provided it is not less than 1/16 inch (1.6 mm) thick in the area where the cord passes through the enclosure.

12.5.4 An insulated metal grommet is acceptable as an insulating bushing if the insulating material is not less than 1/32 inch (0.8 mm) thick and completely fills the space between the grommet and the metal in which it is mounted.

13 Output Connections

13.1 Output terminals shall not be exposed unless they are used for Class 2 output circuits.

Exception: A power unit may employ exposed terminals if the terminals are located in an isolated secondary circuit and all of the following conditions are met:

a) The maximum output voltage (V_{max}) does not exceed 42.4 volts peak ac or 60 volts dc.

b) The output current rating does not exceed 8 amperes for ac or dc voltages up to 30 V rms, or 150/V_{max} amperes for dc voltages between 30 V and 60 V.

c) The exposed terminals comply with the requirements in 12.2.1 – 12.2.9.

d) A nonmetallic terminal cover is employed to reduce the likelihood of bridging between terminals. The cover shall be close-fitting over the top and all sides of the terminal block, with no opening other than those necessary for entry of conductors. The cover shall be attached so that it cannot be discarded. The nonmetallic material shall comply with the requirements in 7.1.5, and shall also

Documents
Document Sharing Hub
Full document details: UL 1012 2021

comply with the requirements for resistance to hot-wire ignition in the Standard for Polymeric Materials – Use in Electrical Equipment Evaluations, UL 746C.

e) The power unit is marked as required by 61.1.5.

13.2 A metal enclosure of a power unit shall not be used as an output-circuit current-carrying part.

13.3 A power unit having a flexible power supply cord shall be provided with an integral output cord terminating in a connector, or with a connector directly attached to the enclosure.

Exception No. 1: A stationary power unit intended to be fastened in place may be provided with output connections for permanent wiring if the connections are enclosed but readily accessible by means of a hinged cover, access opening, or the equivalent. A standard trade size conduit knockout shall be provided for connection of the output conduit system. See 12.3.3.

Exception No. 2: This requirement does not apply to a power unit output circuit complying with Exception No. 1 to 13.1.

13.4 The output flexible cord required by 13.3, whether permanently attached to the power unit or provided in the form of a separate cord set, is to be equivalent to the power supply cord specified in Table 12.2.

Exception: Output wiring for Class 2 circuits may be parallel cord insulated with rubber, neoprene, or thermoplastic having a wall thickness not less than 0.013 inch (0.33 mm).

13.5 A battery charger provided with output contacts in a recessed compartment to accommodate a battery or battery pack shall either:

a) Employ recessed contacts that are not accessible to the articulate probe (see Figure 8.1);

b) Employ an interlock to de-energize contacts that are accessible to the articulate probe (see Figure 8.1) with the battery fully removed; or

c) Have an output not exceeding 60 volts dc and employ contacts that do not provide electrical energy – high current levels (See 6.10).

13.6 A special application battery charger shall be provided with a special use polarized connector complying with the requirements in the Standard for Component Connectors for Use in Data, Signal, Control and Power Applications, UL 1977.

13.7 A connector for an output circuit, other than one intended for use with a Class 2 circuit, shall comply with the requirements in the Standard for Component Connectors for Use in Data, Signal, Control and Power Applications, UL 1977, or the Standard for Attachment Plugs and Receptacles, UL 498.

13.8 A connector intended for use with other than line voltage shall have a nonstandard pin configuration.

13.9 A connector for an output not exceeding 42.4 volts peak or 60 volts dc shall have no exposed current carrying pins that could be short-circuited when placed on a flat metal surface.

13.10 A strain-relief means and a bushing for the output cord shall comply with the requirements in 12.4 and 12.5.

Documents
Document Sharing Hub
Full document details: UL 1012 2021

13.11 A rubber or neoprene bushing intended for use with Class 2 or Class 3 field-installed output wiring shall not be less than:

a) 1/8 inch (3.2 mm) thick with the opening in which the bushing is mounted free from rough or sharp edges that may damage the bushing; or

b) 3/64 inch (1.2 mm) thick with an opening that is eyeletted or otherwise provided with smooth edges.

14 Interconnections Between Sections

14.1 The means provided for external connection between sections of a unit or between units of a system shall comply with the requirements described in 14.2 – 14.10.

14.2 A flexible-cord or -cable assembly used for interconnection shall be of a type as specified in Table 12.2 and shall be provided with bushings and strain relief in accordance with 12.4.1 – 12.5.4.

Exception No. 1: The strain relief for wires and cables that are part of the secondary circuits mentioned in 36.5 – 36.15 shall comply with the Exception to 46.1.

Exception No. 2: When an interconnecting cable is used, it shall be constructed of a thermoplastic or thermoset jacketed appliance wiring material, required for the maximum voltage, current, and temperature involved and shall be rated VW-1, FT-1, or better. The cable employed shall be classified for use for external interconnection of electronic equipment and equivalent to the flexible cords specified in Table 12.2.

14.3 Inserting a male connector in a female connector other than the one intended to receive it, misalignment of male and female connectors, and other manipulations of parts that are accessible to the operator shall not result in a risk of electric shock or electrical energy – high current levels to persons. See 14.5.

14.4 If either end of an interconnecting cable terminates in a connector having one or more exposed contacts, a risk of electric shock or electrical energy – high current levels shall not result between contacts and between earth ground and any contact that is exposed on either the connector or its receptacle while the connector is out of its receptacle. See 14.5 and 14.6.

14.5 Inclusion of an interlock circuit in the cable to de-energize the exposed contacts whenever an end of the cable is disconnected constitutes compliance with the requirement in 14.3 and 14.4.

14.6 Unless acceptable cable assemblies are provided, each section of a unit shall be provided with acceptable field-wiring terminals or leads to facilitate interconnection by means of permanently installed wiring.

14.7 Sections of a unit that are intended to be combined in field installations to form overall unified enclosures (modular units – see 7.7.1) may be acceptable if the modules provide complete enclosures or the equivalent that facilitate the routing or interconnecting cables or other wiring from one unit of the system to another. Such constructions shall provide substantially complete enclosures for all wiring.

14.8 If interconnection of sections of a unit involves Class 2 circuits, the Class 2 circuits may be terminated in field-wiring connections other than specified in 14.6, such as wire-wrap or crimp-on types, if the Class 2 circuits are permanently separated from all other circuits and if the mating parts and instructions for their method of attachment are provided.

Documents
Document Sharing Hub
Full document details: UL 1012 2021

14.9 A connector used for interconnection between modules or for connection to an external control circuit shall comply with 13.7.

14.10 Sections of a unit interconnected by flexible metal conduit or flexible metal tubing shall be bonded together by an equipment grounding conductor. The size of the grounding conductor shall not be less than the circuit conductors contained within the conduit.

15 Battery Charger Backfeed Protection

15.1 The requirements in this Section apply to battery chargers intended to charge portable equipment or batteries for use with portable equipment such as battery powered tools (drills, saws, screwdrivers, and similar tools), telephones, radios, and similar products where the charger output is by means of an output cord and connector, or a connector attached to or integral with the charger enclosure.

15.2 A battery charger shall be provided with a means to inhibit backfeed of current during a fault in the output circuit. The means of prevention shall protect each output and shall consist of an output cord (if provided) equivalent to that specified in Table 12.2. The battery charger shall comply with the test specified in 54.9.

Exception No. 1: A means of protection is not required when a specific battery or battery pack, to be used with the charger, does not exceed Class 2 parameters at any level of charge condition. See 61.1.11.

Exception No. 2: A battery charger employing integral batteries is not required to comply with 15.1.

16 Grounding Connections

16.1 Power units required to comply with applicable grounding requirements are:

a) A fixed or stationary power unit;

b) A portable outdoor or commercial power unit;

c) A portable power unit for use in a circuit involving a potential of more than 150 volts to ground; and

d) A power unit provided with a grounding means, whether required or not.

16.2 A fixed power unit shall be provided with a terminal or lead for grounding all dead metal parts that are exposed or are likely:

a) To be touched by a person during operation or adjustment of the power unit; and

b) To become energized through an electrical fault.

16.3 To determine if a part is likely to become energized, the following factors are to be evaluated:

a) The proximity of wiring;

b) The results of a dielectric voltage-withstand test after a test such as the overload or the endurance test; and

c) The results of appropriate burnout tests.

Documents
Document Sharing Hub
Full document details: UL 1012 2021

16.4 The grounding connection shall be located so that it is unlikely to be removed during normal servicing. The grounding connection shall penetrate any nonconductive coating, such as paint or vitreous enamel, over the part to be grounded.

16.5 A wire-binding screw for the connection of a field-installed equipment grounding conductor shall have a green colored head that is either hexagonal, slotted, or both. A pressure wire connector intended for connection of such a conductor shall be plainly identified by:

a) A marking, such as "G," "GR," "GND," "Ground," "Grounding," or the like;

b) A wiring diagram attached to the power unit; or

c) The grounding symbol illustrated in Figure 16.1, on or adjacent to the terminal.

The wire-binding screw or pressure wire connector shall be located so that it does not require removal during intended servicing of the unit.

Figure 16.1

Grounding symbol

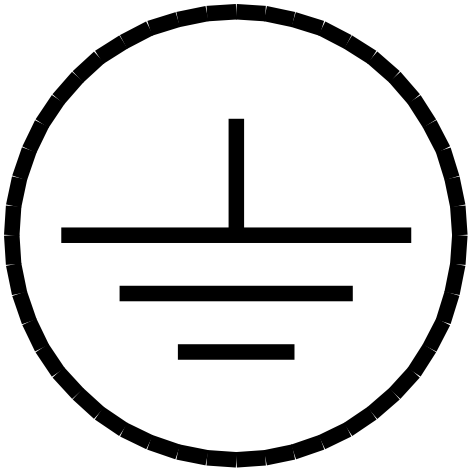

16.6 The grounding terminal shall be capable of securing a conductor of a size required for the application in accordance with Column 2 of Table 17.2.

Exception: A grounding terminal capable of securing a conductor of a size specified in 61.2.11 may be used.

16.7 A soldering lug, a screwless (push-in) connector, a quick-connect, or other friction-fit connector shall not be used. A sheet metal screw shall not be used to connect a grounding conductor or connection device to an enclosure.

Exception: A quick-connect terminal may be used in conjunction with solder for securing the grounding conductor.

16.8 A grounding conductor shall be a size specified in Column 2 of Table 17.2 or larger. A grounding lead shall have a free length of at least 6 inches (152 mm), and the surface of the insulation shall be green with or without one or more yellow stripes. No other lead in a field-wiring compartment or visible to the installer shall be so identified.

AVA Documents
Document Sharing Hub

Full document details: UL 1012 2021

Exception: The color coding requirement does not apply to a Class 2 circuit when the low voltage leads or terminals are either:

a) Located remote from the line-voltage connections and the segregation complies with the requirements in 23.1 – 23.3; or

b) Specifically marked so that reference to a wiring diagram is not required.

16.9 The surface of any insulation on the grounding conductor of a flexible supply cord shall be green with or without one or more yellow stripes and no other conductor shall be so identified.

16.10 The grounding conductor shall be connected to the grounding blade of a grounding attachment-plug and shall be connected to dead metal parts within the frame or enclosure by means such as a screw or stud, nut, and lockwasher. An external force applied to the power supply cord shall not transmit stress to the grounding connection on the frame or enclosure before the line-voltage connections are broken.

16.11 A grounding connection, grounding conductor, enclosure, frame, component mounting panel, or any other part connected to earth ground shall not carry current except during an electrical fault.

Exception No. 1: A Class 2 or an isolated limited-energy circuit may be connected to a single-point reference ground. Current is not to be carried through the field-equipment-grounding connection, metallic raceway, or other grounding means.

Exception No. 2: A line by-pass capacitive impedance circuit for a radio frequency signal circuit need not comply with this requirement.

16.12 A grounded circuit conductor shall not be connected to any grounding or bonding circuit or device in a power unit.

17 Bonding of Internal Parts

17.1 General

17.1.1 If grounding is required – see 16.1 – an exposed dead metal part that is likely to become energized by an electrical fault shall be bonded to the point of connection of the field-equipment-grounding means. See 16.2 and 16.3. See also Bonding Conductor Test, Section 57.

17.1.2 Uninsulated dead metal parts such as a cabinet, component enclosure, and cover shall be electrically bonded together if they might be contacted by the user or service personnel.

Exception No. 1: A metal panel or cover need not be bonded if it is either:

a) Insulated from electrical components and wiring by a barrier of vulcanized fiber, varnished cloth, phenolic composition, or other moisture-resistant insulating material not less than 1/32 inch (0.8 mm) thick and mechanically secured in place;

b) Not likely to become energized because uninsulated live parts are enclosed and wiring is positively separated from the panel or cover; or

c) Separated from live parts and wiring by a grounded or bonded interposing metal barrier or part such that the metal barrier will be the first to be subjected to an electrical fault.

Exception No. 2: An internal dead metal part need not be bonded if it is marked as specified in 61.1.3.

Documents
Document Sharing Hub
Full document details: UL 1012 2021

17.1.3 A metal part, such as an adhesive-attached metal marking plate, a screw, or a handle, located on the outside of an enclosure or cabinet, need not be bonded if it is:

a) Isolated from electrical components and wiring by a grounded metal part so that it is not likely to become energized; or

b) Separated from wiring and spaced from uninsulated live parts as if it were a grounded part.

17.1.4 In addition to the parts mentioned in 17.1.3, other parts not required to be bonded are small internal assembly screws, rivets, or other small fasteners, a handle for a disconnect switch, and a relay or contactor magnet and armature.

17.1.5 Uninsulated live parts and wiring shall be separated from a moving or movable part, such as a relay or contactor armature, a panel, or a cover by clamping, positioning, or an equivalent means that maintains permanent separation.

17.1.6 An internal connection for bonding an internal part to the enclosure may employ a quick-connect terminal of the dimensions specified in Table 17.1 if the connector is not likely to be displaced and the component is limited to use in a circuit having a branch-circuit protective device rated 20 amperes or less. A quick-connect terminal is not acceptable for a connection to be made in the field.

Table 17.1
Dimensions for quick-connect bonding terminal

Terminal dimensions, inch (mm)
0.020 (0.51) by 0.187 (4.75) by 0.250 (6.35)
0.032 (0.81) by 0.187 (4.75) by 0.250 (6.35)
0.032 (0.81) by 0.205 (5.21) by 0.250 (6.35)
0.032 (0.81) by 0.250 (6.35) by 0.313 (7.95)

17.2 Bonding conductor

17.2.1 Bonding shall be accomplished by a metal-to-metal contact of parts or by a separate bonding conductor as specified in 17.2.6.

17.2.2 A bonding conductor shall be copper, copper alloy, or other acceptable material.

17.2.3 Ferrous metal in the grounding path shall be protected against corrosion by enameling, galvanizing, plating, or other equivalent means.

Exception: Corrosion protection is not required at electrical connections.

17.2.4 A separate bonding conductor:

a) Shall be protected from mechanical damage or located within the outer enclosure; and

b) Shall not be secured by a removable fastener used for a purpose in addition to bonding unless the bonding conductor is not likely to be omitted if the fastener is removed and replaced as intended.

A bonding conductor shall be in metal-to-metal contact with the parts to be bonded.

Documents
Document Sharing Hub
Full document details: UL 1012 2021

17.2.5 A splice shall not be employed in a bonding conductor.

17.2.6 A separate component-bonding conductor shall either:

a) Be not smaller than the size specified in Column 2 of Table 17.2;

b) Be not smaller than the conductor supplying the component; or

c) Comply with the Bonding Conductor Test, Section 56.

Exception: This requirement does not apply to component bonding conductors complying with 17.2.7.

Table 17.2
Size of circuit bonding, equipment-grounding, and grounding electrode conductors

Column 1	Column 2				Column 3		Column 4	
	Mimimun size of equipment grounding or bonding conductor AWG or kcmil (mm^2)[b]				Minimum size of grounding electrode conductor AWG or kcmil (mm^2)		Minimum size of output circuit bonding jumper AWG or kcmil (mm^2)[e,f]	
Maximum current rating[a] (amperes)	Copper	Aluminum or copper-clad aluminum	Rigid conduit or pipe trade size, inch	Electrical metallic tubing, trade size, inch	Copper	Aluminum or copper-clad aluminum	Copper	Aluminum or copper-clad aluminum
15	14 (2.1)	12 (3.3)	1/2	1/2	8 (8.4)	6 (13.3)	8 (8.4)	6 (13.3)
20	12 (3.3)	10 (5.3)	1/2	1/2	8 (8.4)	6 (13.3)	8 (8.4)	6 (13.3)
60	10 (5.3)	8 (8.4)	1/2	1/2	8 (8.4)	6 (13.3)	8 (8.4)	6 (13.3)
90	8 (8.4)	6 (13.3)	1/2	1/2	8 (8.4)	6 (13.3)	8 (8.4)	6 (13.3)
100	8 (8.4)	6 (13.3)	1/2	1/2	6 (13.3)	6 (13.3)	6 (13.3)	4 (21.2)
150	6 (13.3)	4 (21.2)	1/2	1	6 (13.3)	4 (21.2)	6 (13.3)	4 (21.2)
200	6 (13.3)	4 (21.2)	1/2	1	4 (21.2)	2 (33.6)	4 (21.2)	2 (33.6)
300	4 (21.2)	2 (33.6)	3/4	1-1/4	2 (33.6)	1/0 (53.5)	2 (33.6)	1/0 (53.5)
400	3 (26.7)	1 (42.4)	3/4	1-1/4	1/0[c] (53.5)	3/0[c] (85.0)	1/0[c] (53.5)	3/0[c] (85.0)
500	2 (33.6)	1/0 (53.5)	3/4	1-1/4	2/0 (67.4)	4/0 (107.2)	1/0 (53.5)	3/0 (85.0)
600	1 (42.4)	2/0 (67.4)	3/4	1-1/4	2/0 (67.4)	4/0 (107.2)	2/0 (67.4)	4/0 (107.2)
800	1/0 (53.5)	3/0 (85.0)	1	2	3/0 (85.0)	250 (127)	2/0 (67.4)	4/0 (107.2)
1000	2/0 (67.4)	4/0 (107.2)	1	2	3/0 (85.0)	250 (127)	3/0 (85.0)	250 (127)
1200	3/0 (85.0)	250 (127)	1	2	3/0 (85.0)	250 (127)	250[d] (127)	250 (127)

NOTE – See Table 17.3 for equivalent area of bus.

[a] Maximum ampere rating of the input circuit overcurrent protective device in 54.1.3 or the output circuit overcurrent protective device described in 31.1 – 31.5.

[b] The equipment grounding conductor in the cord for a portable or stationary unit is able to be the same size as the current-carrying conductors.

[c] When the wire terminal connectors for the input or output circuit conductors, as appropriate, are rated for two 3/0 AWG copper or two 250 kcmil aluminum conductors and do not accept a 600 kcmil (304 mm^2) conductor, these values may be reduced to 2 AWG copper or 1/0 AWG aluminum.

[d] The cross section is able to be reduced to 12.5 percent of the total cross section of the largest input or output circuit conductor, as appropriate, of the same material (copper or aluminum) for any phase. This applies when the cross section of the circuit conductors is limited by the wire terminal connectors provided.

Table 17.2 Continued on Next Page

Documents
Document Sharing Hub
Full document details: UL 1012 2021

Table 17.2 Continued

Column 1	Column 2				Column 3		Column 4	
Maximum current rating[a] (amperes)	Mimimun size of equipment grounding or bonding conductor AWG or kcmil (mm^2)[b]				Minimum size of grounding electrode conductor AWG or kcmil (mm^2)		Minimum size of output circuit bonding jumper AWG or kcmil (mm^2)[e,f]	
	Copper	Aluminum or copper-clad aluminum	Rigid conduit or pipe trade size, inch	Electrical metallic tubing, trade size, inch	Copper	Aluminum or copper-clad aluminum	Copper	Aluminum or copper-clad aluminum

[e] The bonding jumper for a stationary or portable unit is able to be the same size as the current-carrying conductors of the output circuit.

[f] The bonding jumper for a permanently connected Class 2 or Class 3 output circuit is able to be the same size as the current carrying conductors. The jumper shall not be smaller then 14 AWG for copper or 12 AWG for aluminum.

Table 17.3
Equivalent cross-sectional areas of wires and buses

Wire size (AWG or kcmil)	Minimum cross section of bus	
	$inch^2$	(mm^2)
8	0.013	(8.39)
6	0.021	(13.55)
4	0.033	(21.29)
3	0.041	(26.45)
2	0.052	(33.55)
1	0.066	(42.58)
0	0.083	(53.55)
2/0	0.105	(67.74)
3/0	0.132	(85.16)
4/0	0.166	(107.10)
250	0.196	(236.45)

17.2.7 If more than one size of branch-circuit overcurrent-protective device is used, the size of a component-bonding conductor is to be based on the rating of an overcurrent-protective device providing ground-fault protection for that component. For a component individually protected by a branch circuit overcurrent-protective device rated less than the overcurrent-protective device used in the power unit circuit, a bonding conductor is to be sized on the basis of the component overcurrent-protective device rating.

18 Identification for Connection of Grounded Conductors

18.1 A unit rated as follows shall have the grounded conductor connected to the components, when provided, and as specified in 18.2 (a) – (c):

a) 120 volts, 2-wire;

b) 120/240 volts, single-phase, 3-wire;

c) 208Y/120 volts, two-phase, 3-wire;

Documents
Document Sharing Hub
Full document details: UL 1012 2021