UL 1018

ISBN 0-7629-0545-X

Electric Aquarium Equipment

Documents
Document Sharing Hub

Full document details: UL 1018 2003

Documents
Document Sharing Hub

Full document details: UL 1018 2003

Underwriters Laboratories Inc. (UL)
333 Pfingsten Road
Northbrook, IL 60062-2096

UL Standard for Safety for Electric Aquarium Equipment, UL 1018

Fifth Edition, Dated March 12, 2001

Revisions: This Standard contains revisions through and including April 29, 2003.

Summary of Topics

This revision of UL 1018 is being issued to revise Table 8.1 and paragraph 8.2.4.3 in accordance with the 2002 edition of the National Electrical Code (NEC). The word "natural" has been deleted from the term "natural gray" used to identify grounded conductors.

UL Standards for Safety are developed and maintained in the Standard Generalized Markup Language (SGML). SGML -- an international standard (ISO 8879-1986) -- is a descriptive markup language that describes a document's structure and purpose, rather than its physical appearance on a page. Due to formatting differences resulting from the use of UL's new electronic publishing system, please note that additional pages (on which no requirements have been changed) may be included in revision pages due to relocation of existing text and reformatting of the Standard.

Text that has been changed in any manner is marked with a vertical line in the margin. Changes in requirements are marked with a vertical line in the margin and are followed by an effective date note indicating the date of publication or the date on which the changed requirement becomes effective.

The new and/or revised requirements are substantially in accordance with UL's Bulletin(s) on this subject dated February 21, 2003. The bulletin(s) is now obsolete and may be discarded.

The revisions dated April 29, 2003 include a reprinted title page (page1) for this Standard.

The master for this Standard at UL's Northbrook Office is the official document insofar as it relates to a UL service and the compliance of a product with respect to the requirements for that product and service, or if there are questions regarding the accuracy of this Standard.

UL's Standards for Safety are copyrighted by UL. Neither a printed copy of a Standard, nor the distribution diskette for a Standard-on-Diskette and the file for the Standard on the distribution diskette should be altered in any way. All of UL's Standards and all copyrights, ownerships, and rights regarding those Standards shall remain the sole and exclusive property of UL.

All rights reserved. No part of this publication may be reproduced, stored in a retrieval system, or transmitted in any form by any means, electronic, mechanical photocopying, recording, or otherwise without prior permission of UL.

Revisions of UL Standards for Safety are issued from time to time. A UL Standard for Safety is current only if it incorporates the most recently adopted revisions.

UL provides this Standard ″as is″ without warranty of any kind, either expressed or implied, including but not limited to, the implied warranties of merchantability or fitness for any purpose.

Documents
Document Sharing Hub

Full document details: UL 1018 2003

In no event will UL be liable for any special, incidental, consequential, indirect or similar damages, including loss of profits, lost savings, loss of data, or any other damages arising out of the use of or the inability to use this Standard, even if UL or an authorized UL representative has been advised of the possibility of such damage. In no event shall UL's liability for any damage ever exceed the price paid for this Standard, regardless of the form of the claim.

UL will attempt to answer support requests concerning electronic versions of its Standards. However, this support service is offered on a reasonable efforts basis only, and UL may not be able to resolve every support request. UL supports the electronic versions of its Standards only if they are used under the conditions and operating systems for which it is intended. UL's support policies may change from time-to-time without notification.

UL reserves the right to change the format, presentation, file types and formats, delivery methods and formats, and the like of both its printed and electronic Standards without prior notice.

Purchasers of the electronic versions of UL's Standards for Safety agree to defend, indemnify, and hold UL harmless from and against any loss, expense, liability, damage, claim, or judgement (including reasonable attorney's fees) resulting from any error or deviation introduced while purchaser is storing an electronic Standard on the purchaser's computer system.

If a single-user version electronic Standard was purchased, one copy of this Standard may be stored on the hard disk of a single personal computer, or on a single LAN file-server or the permanent storage device of a multiple-user computer in such a manner that this Standard may only be accessed by one user at a time and for which there is no possibility of multiple concurrent access.

If a multiple-user version electronic Standard was purchased, one copy of the Standard may be stored on a single LAN file-server, or on the permanent storage device of a multiple-user computer, or on an Intranet server. The number of concurrent users shall not exceed the number of users authorized.

Electronic Standards are intended for on-line use, such as for viewing the requirements of a Standard, conducting a word search, and the like. Only one copy of the Standard may be printed from each single-user version of an electronic Standard. Only one copy of the Standard may be printed for each authorized user of a multiple-user version of an electronic Standard. Because of differences in the computer/software/printer setup used by UL and those of electronic Standards purchasers, the printed copy obtained by a purchaser may not look exactly like the on-line screen view or the printed Standard.

An employee of an organization purchasing a UL Standard can make a copy of the page or pages being viewed for their own fair and/or practical internal use.

The requirements in this Standard are now in effect, except for those paragraphs, sections, tables, figures, and/or other elements of the Standard having future effective dates as indicated in the note following the affected item. The prior text for requirements that have been revised and that have a future effective date are located after the Standard, and are preceded by a ″SUPERSEDED REQUIREMENTS″ notice.

New product submittals made prior to a specified future effective date will be judged under all of the requirements in this Standard including those requirements with a specified future effective date, unless the applicant specifically requests that the product be judged under the current requirements. However, if the applicant elects this option, it should be noted that compliance with all the requirements in this Standard will be required as a condition of continued Listing, Recognition, and Follow-Up Services after the effective date, and understanding of this should be signified in writing.

Copyright © 2003 Underwriters Laboratories Inc.

Documents
Document Sharing Hub

Full document details: UL 1018 2003

This Standard consists of pages dated as shown in the following checklist:

Page	Date
1	April 29, 2003
2-5	March 12, 2001
6-7	April 29, 2003
8-21	March 12, 2001
22	April 29, 2003
23-26	March 12, 2001
27	April 29, 2003
28-82	March 12, 2001
A1-A2	March 12, 2001

Documents
Document Sharing Hub

Full document details: UL 1018 2003

No Text on This Page

Documents
Document Sharing Hub

Full document details: UL 1018 2003

MARCH 12, 2001
(Title Page Reprinted: April 29, 2003)

UL 1018

Standard for Electric Aquarium Equipment

Previous numbered and unnumbered editions of standards covering electric aquarium equipment have been published since April 1978.

First Edition – April, 1978
Second Edition – September, 1984
Third Edition – November, 1990
Fourth Edition – September, 1995

Fifth Edition

March 12, 2001

An effective date included as a note immediately following certain requirements is one established by Underwriters Laboratories Inc.

Revisions of this Standard will be made by issuing revised or additional pages bearing their date of issue. A UL Standard is current only if it incorporates the most recently adopted revisions, all of which are itemized on the transmittal notice that accompanies the latest set of revised requirements.

ISBN 0-7629-0545-X

COPYRIGHT © 1978, 2003 UNDERWRITERS LABORATORIES INC.

Documents
Document Sharing Hub

Full document details: UL 1018 2003

No Text on This Page

Documents
Document Sharing Hub

Full document details: UL 1018 2003

CONTENTS

FOREWORD 6

INTRODUCTION

1 Scope 7
2 General 7
2.1 Components 7
2.2 Units of measurement 8
2.3 Undated references 8
3 Glossary 8

CONSTRUCTION

4 Frame and Enclosure 9
4.1 General 9
4.2 Thickness of metal 9
4.3 Barriers 10
4.4 Polymeric material 12
5 Mechanical Assembly 14
6 Accessibility of Live Parts 15
7 Protection Against Corrosion 19
8 Supply Connections 19
8.1 Cord-connected appliances 19
8.2 Permanently-connected appliances 23
9 Strain Relief 27
10 Bushings 28
11 Grounding 29
11.1 General 29
11.2 Identification 30
12 Internal Wiring 31
12.1 General 31
12.2 Aluminum conductors – termination 31
12.3 Protection of wiring 31
12.4 Polarity 32
13 Splices 33
14 Separation of Circuits 33
14.1 General 33
14.2 Barriers 34
15 Insulating Material 34
16 Interconnecting Cords and Cables 34
17 Motors 35
17.1 General 35
17.2 Overcurrent protection for motors 35
18 Overcurrent Protective Devices 36
19 Spacings 36
20 Antisiphoning 38
21 Reduction of Risk of Injury to Persons 38
21.1 General 38
21.2 Sharp edges 39
21.3 Switches, controls, interlocks 39

Documents
Document Sharing Hub

Full document details: UL 1018 2003

21.4 Materials 39
21.5 Rotating or moving members 40
22 Switches and Controllers 40
23 Lampholders 41
24 Capacitors 41
25 Electronic Control Equipment 42
26 Printed Wiring Boards 42
27 Thermostats 42
28 Fusible Links 43
29 Rectifiers 43
30 Heating Elements 43
31 Attachments 43

PERFORMANCE

32 General 44
33 Leakage Current Test 44
34 Insulation Resistance Test 48
35 Input Test 49
36 Normal Temperature Test 49
36.1 General 49
36.2 Maximum normal load 51
36.3 Immersible heaters 52
36.4 Water pumps 52
36.5 Air pumps 52
36.6 Aquarium stands 52
36.7 Reflectors 52
36.8 Test voltages 53
36.9 Other test requirements 53
37 Dielectric Voltage-Withstand Test 55
37.1 General 55
37.2 Secondary circuits 56
38 Grounding Continuity Test 57
39 Repeated Leakage Test and Dielectric Test (After Conditioning) 57
40 Repeated Leakage Measurement Test – Heaters 57
41 Abnormal Operation Test 58
41.1 General 58
41.2 Heater-motor combinations 59
41.3 Immersible heaters 59
41.4 Motors and protectors 60
42 Mechanical Abuse Test – Immersible Heaters 61
42.1 General 61
42.2 Results 61
42.3 Pull and torque 62
43 Immersion Test 62
44 Aquarium Stands or Shelves Test 63
44.1 Overflow (all types) 63
44.2 Glass breakage (all types) 63
44.3 Stability (free standing units) 64
44.4 Mounting means (units intended for wall or ceiling mounting) 64
45 Strain Relief Test 65
46 Flooding of Live Parts Test 65
47 Air Pump Antisiphoning Test 65

Documents
Document Sharing Hub
Full document details: UL 1018 2003

48 Mechanical Abuse Test on Glass Used in Applications Other Than Immersible Heaters 65
49 Switches and Controls Test 66
49.1 Overload 66
49.2 Locked rotor motor overload 66
50 Thermostats, Fusible Links, and Protective Devices Tests 66
50.1 Thermostats 66
50.2 Fusible links 67
50.3 Motor protectors – short circuit 67
51 Aquarium Appliance Pull Test 68
52 Aging Test on Seal Materials 68
53 Resistance to Salt Spray Test 68
54 Resistance to Overflow Test 69
55 Permanence of Adhesion Test 70

MANUFACTURING AND PRODUCTION-LINE TESTS

56 Production-Line Dielectric Voltage-Withstand Test 70
57 Production-Line Grounding Continuity Test 72

RATINGS

58 General 72

MARKINGS

59 Identification and Ratings 72
60 Cautionary and Warning Markings 73
60.1 General 73
60.2 Permanently-connected equipment 75
61 Permanence of Markings 76
62 Instruction Manual 76
62.1 General 76
62.2 Safety instructions 76
62.3 Installation instructions 80
62.4 Grounding instructions 81
62.5 Operation and maintenance 82

APPENDIX A

Standards for Components. A1

Documents
Document Sharing Hub
Full document details: UL 1018 2003

FOREWORD

A. This Standard contains basic requirements for products covered by Underwriters Laboratories Inc. (UL) under its Follow-Up Service for this category within the limitations given below and in the Scope section of this Standard. These requirements are based upon sound engineering principles, research, records of tests and field experience, and an appreciation of the problems of manufacture, installation, and use derived from consultation with and information obtained from manufacturers, users, inspection authorities, and others having specialized experience. They are subject to revision as further experience and investigation may show is necessary or desirable.

B. The observance of the requirements of this Standard by a manufacturer is one of the conditions of the continued coverage of the manufacturer's product.

C. A product which complies with the text of this Standard will not necessarily be judged to comply with the Standard if, when examined and tested, it is found to have other features which impair the level of safety contemplated by these requirements.

D. A product that contains features, characteristics, components, materials, or systems new or different from those covered by the requirements in this Standard, and that involves a risk of fire or of electric shock or injury to persons shall be evaluated using appropriate additional component and end-product requirements to maintain the level of safety as originally anticipated by the intent of this Standard. A product whose features, characteristics, components, materials, or systems conflict with specific requirements or provisions of this Standard does not comply with this Standard. Revision of requirements shall be proposed and adopted in conformance with the methods employed for development, revision, and implementation of this Standard.

E. UL, in performing its functions in accordance with its objectives, does not assume or undertake to discharge any responsibility of the manufacturer or any other party. The opinions and findings of UL represent its professional judgment given with due consideration to the necessary limitations of practical operation and state of the art at the time the Standard is processed. UL shall not be responsible to anyone for the use of or reliance upon this Standard by anyone. UL shall not incur any obligation or liability for damages, including consequential damages, arising out of or in connection with the use, interpretation of, or reliance upon this Standard.

F. Many tests required by the Standards of UL are inherently hazardous and adequate safeguards for personnel and property shall be employed in conducting such tests.

Documents
Document Sharing Hub
Full document details: UL 1018 2003

INTRODUCTION

1 Scope

1.1 These requirements cover commercial and household electric equipment for use on or in aquariums in indoor locations at 300 volts or less, in accordance with the National Electrical Code, NFPA 70, such as heaters, pumps, filters, aerators, reflectors, hoods, electrically wired stands, and similar equipment.

1.2 These requirements do not cover:

a) Illuminators or stands not specifically intended for use with aquariums or

b) Aquarium tanks.

1.3 Deleted April 29, 2003

2 General

2.1 Components

2.1.1 Except as indicated in 2.1.2, a component of a product covered by this standard shall comply with the requirements for that component. See Appendix A for a list of standards covering components generally used in the products covered by this standard.

2.1.2 A component is not required to comply with a specific requirement that:

a) Involves a feature or characteristic not required in the application of the component in the product covered by this standard, or

b) Is superseded by a requirement in this standard.

2.1.3 A component shall be used in accordance with its rating established for the intended conditions of use.

2.1.4 Specific components are incomplete in construction features or restricted in performance capabilities. Such components are intended for use only under limited conditions, such as certain temperatures not exceeding specified limits, and shall be used only under those specific conditions.

Documents
Document Sharing Hub
Full document details: UL 1018 2003

2.2 Units of measurement

2.2.1 Values stated without parentheses are the requirement. Values in parentheses are explanatory or approximate information.

2.2.2 Unless otherwise indicated, all voltage and current values mentioned in this standard are root-mean-square (rms).

2.3 Undated references

2.3.1 Any undated reference to a code or standard appearing in the requirements of this standard shall be interpreted as referring to the latest edition of that code or standard.

3 Glossary

3.1 For the purpose of this standard the following definitions apply.

3.2 AQUARIUM APPLIANCE – An appliance falling within the scope of these requirements. Requirements that apply only to specific appliances are identified by reference in the text to such specific appliances.

3.3 AQUARIUM STAND – Equipment intended to support an aquarium. Such a stand may contain lamps for illumination, heater elements to control the temperature of the aquarium, and other aquarium-related appliances and devices.

3.4 AUTOMATICALLY CONTROLLED – An appliance is considered to be automatically controlled under any one or more of the following conditions:

a) If the repeated starting of the appliance, beyond one complete, predetermined cycle of operation to the point where some form of limit switch opens the circuit, is independent of any manual control.

b) If, during any single, predetermined cycle of operation, a motor is caused to stop and restart one or more times.

c) If, upon energizing the appliance, the initial starting of a motor is likely to be intentionally delayed beyond conventional starting.

d) If, during any single, predetermined cycle of operation, automatic changing of the mechanical load is likely to reduce the motor speed sufficiently to reestablish starting winding connections to the supply circuit.

3.5 REMOTELY CONTROLLED – An appliance is considered remotely controlled if it is not within sight of the operator at the location of the starting switch or other device.

3.6 USER SERVICING – Any form of servicing of an appliance that may be performed by personnel other than those who have been trained to maintain the particular appliance. Examples include:

a) Resetting or replacement of circuit breakers, fuses, and lamps that are accessible without the use of tools.

b) Replacement of removable lamps with or without the use of tools.

Documents
Document Sharing Hub
Full document details: UL 1018 2003

c) Routine operating adjustments necessary to adapt the appliance for different intended functions.

d) Routine cleaning, and maintenance of components such as filters and diffusers.

CONSTRUCTION

4 Frame and Enclosure

4.1 General

4.1.1 An appliance shall be formed and assembled so that it shall have the strength and rigidity necessary to resist the abuses to which it is likely to be subjected. There shall be no likelihood of fire, electric shock, or injury to persons due to total or partial collapse with resulting reduction of spacings, loosening or displacement of parts, or other serious defects.

4.1.2 The enclosure of an appliance, other than a reflector, shall be such that water will not contact live parts when the appliance is subjected to the Resistance to Overflow Test, Section 54, to simulate conditions that might occur during routine use. All accessories required for operation shall remain in place during the test. The Leakage Current Test, Section 33, shall be used to determine whether water has contacted any live part.

4.2 Thickness of metal

4.2.1 For unreinforced, flat surfaces in general, cast metal shall not be less than 1/8 inch (3.2 mm) thick. Malleable iron shall not be less than 3/32 inch (2.4 mm) thick. Die cast metal shall not be less than 5/64 inch (2 mm) thick if the surface is curved, ribbed, or otherwise reinforced, or if the shape or size (or both) of the surface is such that equivalent mechanical strength is provided.

4.2.2 An enclosure of sheet metal other than a hood or reflector shall be evaluated with regard to the size, shape, and thickness of the metal. Consideration shall be given to the intended use of the complete appliance. The use of sheet steel having a thickness of less than 0.026 inch (0.66 mm) if uncoated, or 0.029 inch (0.74 mm) if galvanized, or of nonferrous metal having a thickness of less than 0.036 inch (0.91 mm) is not recommended.

Exception: It is acceptable for a relatively small area or surface that is curved or otherwise reinforced to be less than the specified thickness. A form of construction that uses metal thinner than specified may be used if found to provide equivalent physical strength and protection.

4.2.3 The thickness of sheet metal in an aquarium hood or reflector shall not be less than indicated in Table 4.1.

4.2.4 The maximum dimension specified in Table 4.1 is considered to be:

a) The diameter of a circular appliance,

b) The longest diameter of an elliptical appliance,

c) The longest side of a triangular appliance,

d) The diagonal of a rectangular appliance, or

e) The longest diagonal of a multisided appliance.

Documents
Document Sharing Hub
Full document details: UL 1018 2003

Table 4.1
Minimum sheet metal thicknesses for aquarium reflectors

Type of metal	Where used	Minimum acceptable thickness when maximum dimension[a] is: 36 inches (914 mm) or less, inch	(mm)	More than 36 inches (914 mm), inch	(mm)
Stainless steel	At lampholders	0.015	0.38	0.018	0.46
	Elsewhere in reflectors	0.013	0.33	0.018	0.46
Plated steel	At lampholders	0.015	0.38	0.018	0.46
	Elsewhere in reflectors	0.015	0.38	0.018	0.46
Aluminum, brass, or copper	At lampholders	0.025	0.64	0.032	0.81
	Elsewhere in reflectors	0.020	0.51	0.025	0.64

[a] In accordance with 4.2.4.

4.2.5 Table 4.1 applies to any single surface or single flat sheet. A rigid member consisting of 1/2 by 1/2 inch (12.7 by 12.7 mm) 90 degree angle strips formed of sheet steel not less than 0.032 inch (0.81 mm) thick, or flat steel bars not less than 3/8 inch (9.5 mm) wide and 1/8 inch (3.2 mm) thick can be used to reinforce and divide a large area into sections for which lighter metal may be used. Such reinforcement, unless along the longer dimension of the surface, shall be secured to the adjacent sides of the enclosure. A single piece of sheet metal that is corner bent to form an angle of not more than 120 degrees is considered to be reinforced along the bend, and its thickness may be based on the length of the largest flat surface involved.

4.2.6 The thickness of metal is not specified for a purely ornamental part or for a reflector part not relied upon to enclose wiring or support a live part. A part relied upon to reduce the risk of a reflector falling into an aquarium tank is not considered ornamental.

4.2.7 There is no minimum thickness specified for a reflective strip utilized as a heat sink for a reflector; however, the means of adhesion of the strip to the frame shall be investigated as described in 55.1 – 55.3.

4.3 Barriers

4.3.1 The enclosure of a remotely or automatically controlled appliance, or one intended to operate unattended, shall reduce the risk of molten metal, burning insulation, flaming particles, and the like falling on combustible surfaces or materials, including the surface upon which the appliance is supported.

4.3.2 The requirement in 4.3.1 necessitates the use of a barrier of combustion-resistant material:

a) Under a motor unless one of the following items applies:

1) The structural parts of the motor or of the appliance provide what is determined to be the equivalent of such a barrier.

2) The protection provided with the motor is such that no burning insulation or molten material falls to the surface that supports the appliance when the motor is energized under each of the following fault conditions:

i) Main winding opened,

ii) Starting winding opened,

Documents
Document Sharing Hub
Full document details: UL 1018 2003

iii) Starting switch short circuited, and

iv) For a permanent split capacitor motor, the capacitor short circuited. (The short circuit is to be applied before the motor is energized, and the rotor is to be locked.)

3) The motor is provided with a thermal motor protector (a protective device that is sensitive to temperature and current). It shall prevent the temperature of the motor windings from becoming more than 125°C (257°F) under the maximum load conditions under which the motor will run without causing the protector to cycle. It shall also prevent the motor windings from becoming more than 150°C (302°F) with the rotor of the motor locked.

4) The motor complies with the requirements for impedance-protected motors in the Standard for Overheating Protection for Motors, UL 2111.

b) Under wiring, unless it is of the flame retardant type. Neoprene or thermoplastic insulated wires are considered to be flame retardant types.

4.3.3 The requirement in 4.3.1 will also necessitate that a switch, relay, solenoid, or similar device be individually and completely enclosed unless it can be shown that:

a) Failure of the component would not result in a risk of fire, electric shock, or other injury to persons or

b) There are no openings in the bottom of the appliance overall enclosure.

Exception: A terminal of a switch, relay, solenoid, or a similar device may protrude from such an individual enclosure.

4.3.4 The barrier mentioned in 4.3.2 shall be horizontal, shall be located as indicated in Figure 4.1, and shall have an area not less than that shown in the figure. Openings for drainage, ventilation, and similar needs may be provided in the barrier if they do not permit molten metal, burning insulation, or like materials to fall on combustible material.

Documents
Document Sharing Hub

Full document details: UL 1018 2003

4.4 Polymeric material

4.4.1 A polymeric enclosure material shall be investigated in accordance with the requirements in the Standard for Polymeric Materials – Use in Electrical Equipment Evaluations, UL 746C. The ball impact value referred to in UL 746C shall be 5 foot-pounds force (6.78 J) in all cases.

4.4.2 A polymeric material used for parts other than the enclosure in aquarium equipment shall be evaluated in accordance with the Standard for Tests for Flammability of Plastic Materials for Parts in Devices and Appliances, UL 94.

Documents
Document Sharing Hub

Full document details: UL 1018 2003

Figure 4.1
Location and extent of barrier

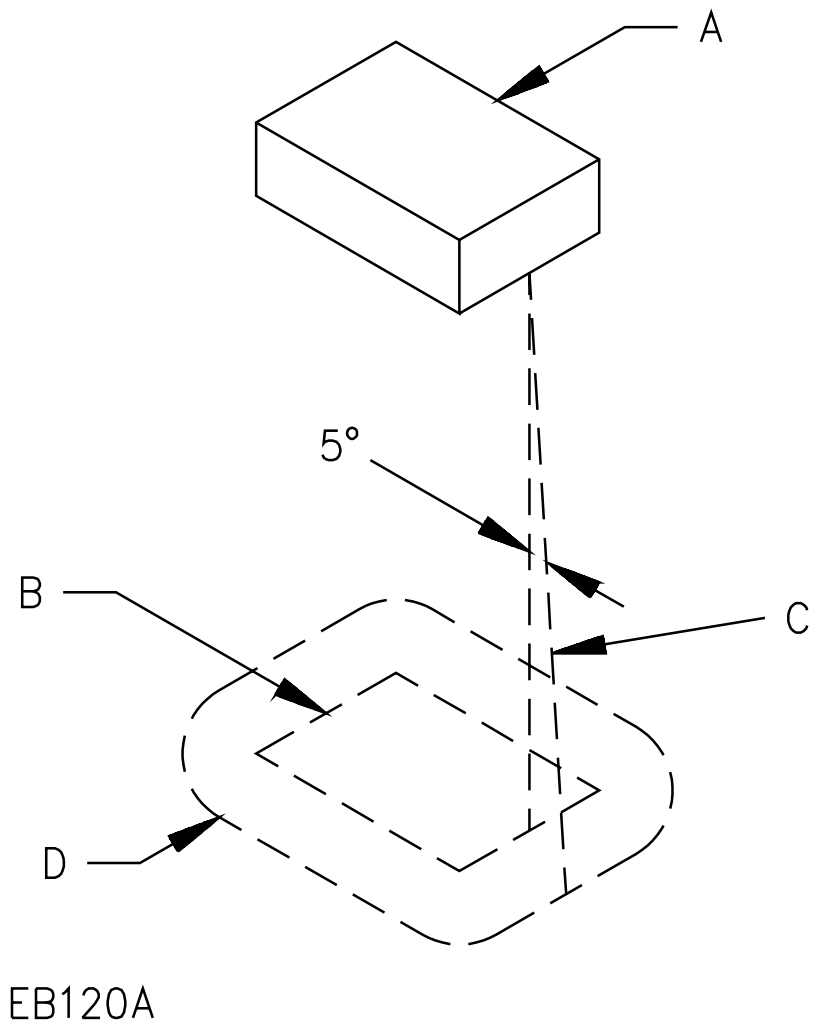

A – Region to be shielded by barrier. This consists of the entire component if it is not otherwise shielded and consists of the unshielded portion of a component which is partially shielded by the component enclosure or equivalent.

B – Projection of outline of component on horizontal plane.

C – Inclined line which traces out minimum area of barrier. When moving, the line is always:

a) Tangent to the component,

b) 5 degrees from the vertical, and

c) Oriented so that the area traced out on a horizontal plane is maximum.

D – Location (horizontal) and minimum area for barrier. The area is that included inside the line of intersection traced out by the inclined line C and the horizontal plane of the barrier.

Documents
Document Sharing Hub
Full document details: UL 1018 2003

4.4.3 Among the factors that shall be taken into consideration when judging the acceptability of magnesium and nonmetallic material are resistance to:

a) Mechanical damage,

b) Impact,

c) Moisture absorption,

d) Combustion,

e) Distortion at temperatures to which the material may be subjected under conditions of normal or abnormal use, and

f) Aging, where the material may be exposed to ultraviolet light (from an ultraviolet lamp bulb, for example), or other similar exposure.

5 Mechanical Assembly

5.1 An appliance shall be assembled so that it will not be affected adversely by the vibration of operation. Brush caps shall be tightly threaded or otherwise constructed to reduce the risk of loosening.

5.2 A switch, lampholder, or any similar component shall be mounted securely and restrained from turning.

Exception No. 1: The requirement that a switch be restrained from turning may be waived if all four of the following conditions are met:

a) The switch is of a plunger or other type that does not tend to rotate when operated. (A toggle switch is considered to be subject to forces that tend to rotate it during operation.)

b) The means for mounting the switch make it unlikely that operation of the switch will loosen it.

c) The electrical spacings would not be reduced below the minimum required values if the switch should rotate.

d) The operation of the switch is by mechanical means rather than by persons.

Exception No. 2: A lampholder of the type in which the lamp is not replaceable (such as a neon pilot or indicator lamp in which the lamp is sealed in a nonrenewable jewel) is not required to be restrained from turning if such rotation does not reduce spacings below those required.

5.3 A properly sized and applied lock washer is acceptable as a means to restrain turning of a stem-mounted switch.

5.4 An aquarium appliance intended to be installed on a tank shall be tested as described in 51.1, and provided with instructions in accordance with 62.3.3.

Exception: The test described in 51.1 is not required to be performed if the shape or size of the appliance is such that it cannot fall into the tank in any position.

Documents
Document Sharing Hub
Full document details: UL 1018 2003

5.5 An uninsulated live part shall be secured to the base or surface so that it is restrained from turning or shifting in position during use if such motion may result in a reduction of spacings below the minimum required values.

6 Accessibility of Live Parts

6.1 An electrical part of an appliance shall be located or enclosed so that the risk of unintentional contact with uninsulated live parts is reduced. The method of evaluating openings in an enclosure is specified in 6.2 – 6.6.

6.2 An opening in the enclosure of an appliance that does not permit entrance of a 1-inch (25.4-mm) diameter rod can be used if a probe, as illustrated in Figure 6.1, when inserted into the opening, does not touch any part that involves electric shock to earth ground.

6.3 Regarding the application of 6.2, the probe may be articulated into any configuration and may be rotated or angled to any position before, during, or after insertion into the opening. The penetration may be to any depth allowed by the opening size, including minimal depth combined with maximum articulation.

6.4 If any part of the enclosure must be opened or removed for user servicing with or without the use of tools, or can be opened or removed without the use of tools, the probe is to be applied without the part in place.

6.5 If an appliance is supported directly by the floor, the probe illustrated in Figure 6.1 is to be applied to every part of the bottom of the enclosure that is accessible without tipping, turning over, or otherwise moving the appliance from its intended position. Any other type of appliance shall be moved in whatever way necessary to make the entire bottom of the enclosure accessible for the application of the probe.

Documents
Document Sharing Hub
Full document details: UL 1018 2003

Figure 6.1
Probe

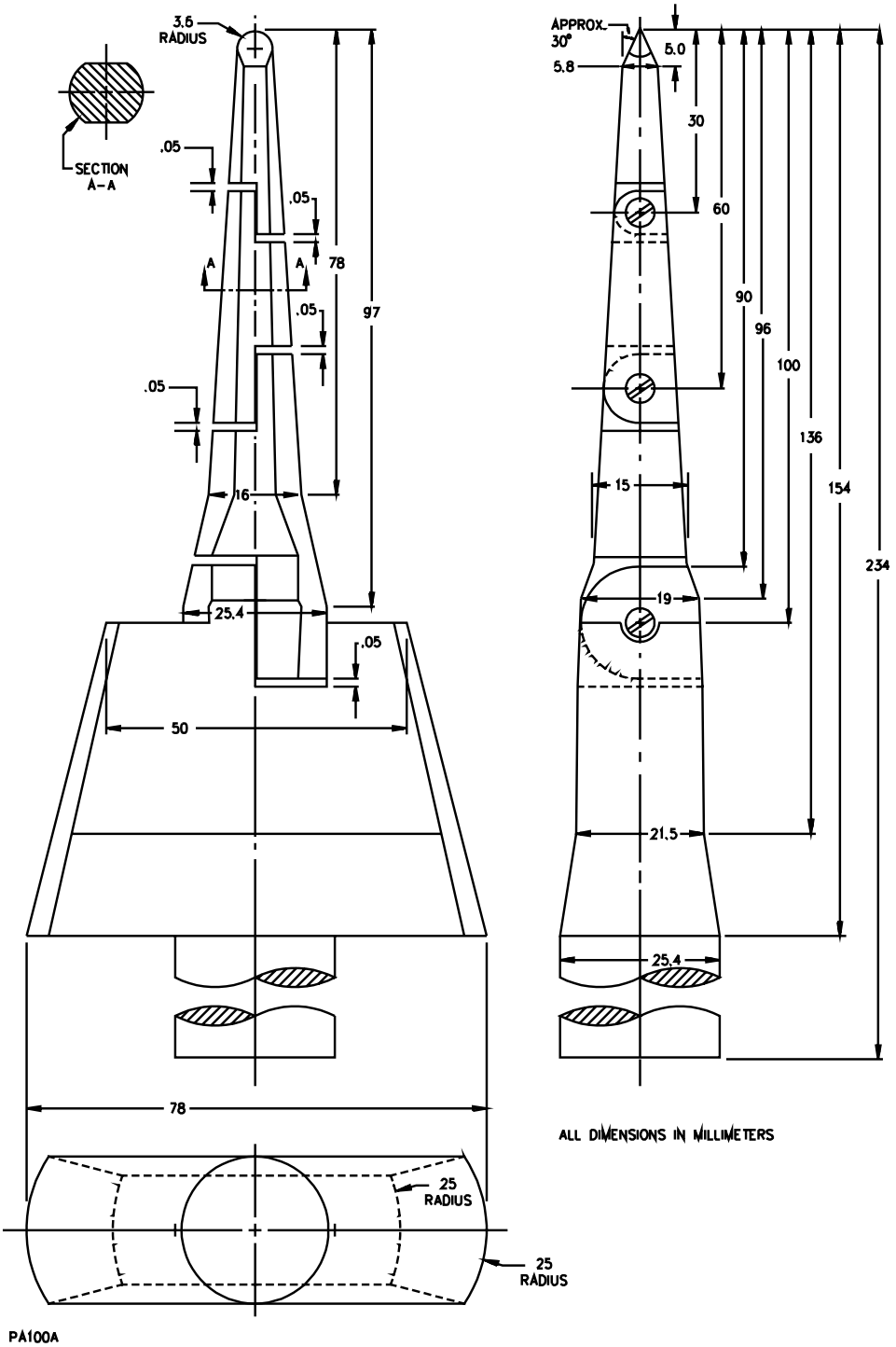

Documents
Document Sharing Hub
Full document details: UL 1018 2003

6.6 An opening that permits entrance of a 1-inch (25.4-mm) diameter rod can be used under the conditions described in Figure 6.2.

Exception: Such openings cannot be used in an appliance that is hand- or body-supported or hand-held in use.

Documents
Document Sharing Hub

Full document details: UL 1018 2003

Figure 6.2
Opening in enclosure

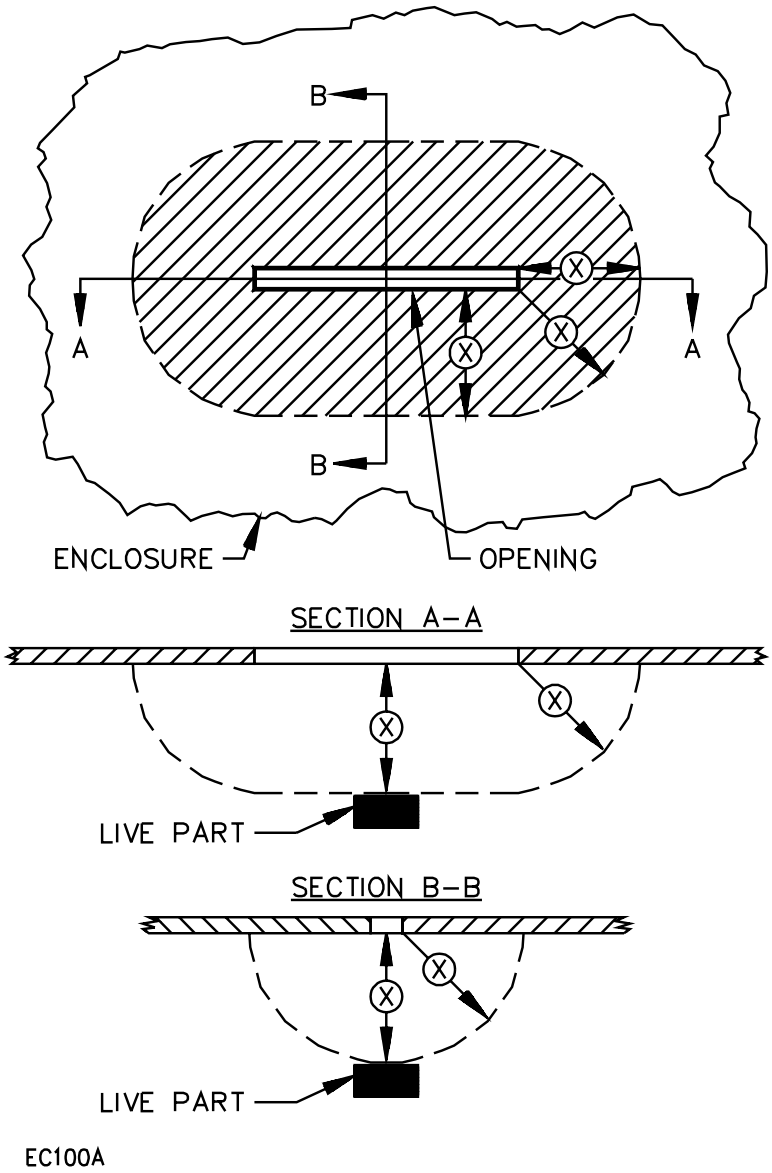

(proportions exaggerated for clarity)

The opening complies if, within the enclosure, there is no uninsulated live part or enamel-coated wire:

a) Less than X inches from the perimeter of the opening and

b) Within the volume generated by projecting the perimeter X inches normal to its plane.

X equals five times the diameter of the largest diameter rod that can be inserted through the opening, but not less than 4 inches (102 mm).

Documents
Document Sharing Hub
Full document details: UL 1018 2003

7 Protection Against Corrosion

7.1 An iron or steel part shall be made corrosion resistant by enameling, plating, galvanizing, or other means determined to be equivalent, if the breakdown of the part is likely to result in a risk of fire, electric shock, or injury to persons.

Exception No. 1: Stainless steel is not required to be additionally protected as described.

Exception No. 2: Corrosion protection may not be required for the following types of materials:

a) Surfaces of sheet steel within an enclosure in certain appliances where the oxidation of steel is not likely to be accelerated (due to the exposure of the metal to air and moisture or to other oxidizing influences) – the thickness of the metal and temperature shall also be considered.

b) Cast iron.

c) A sheath used on a heating element operating in air and a terminal part attached directly to such an element.

7.2 The aging characteristics of plating or other finish used in an appliance shall be such that deterioration of the finish will not eventually result in unacceptable performance of the appliance.

8 Supply Connections

8.1 Cord-connected appliances

8.1.1 A cord-connected aquarium appliance shall be supplied with a minimum 6-foot (1.83-m) long flexible cord and an attachment plug. The cord shall be measured from the face of the plug to the point where the cord enters the appliance.

8.1.2 A flexible cord shall be of a type that is for the intended use. It shall be rated for use at a voltage not less than the rated voltage of the appliance and shall have an ampacity at least equal to the current rating of the appliance. The minimum cord size shall be 18 AWG (0.82 mm^2).

8.1.3 A flexible cord shall terminate in a grounding-type attachment plug or in a polarized attachment plug. Figure 8.1 illustrates attachment plug connections, and Table 8.1 indicates the method of polarity identification of flexible cords.

Exception: A flexible cord is not required to be supplied with a polarized attachment plug if the appliance does not include any single-pole on-off switches, polarized receptacles, or lampholders with screwshells.

8.1.4 If the flexible cord includes an equipment grounding conductor, that conductor shall comply with 11.2.

8.1.5 The attachment plug shall be of a type for use at the rated current and voltage of the appliance. If the appliance is intended to be adapted for use on two or more different supply voltages by field alteration of internal connections, the attachment plug provided with the appliance shall be intended for the voltage for which the appliance is connected at the factory.

Documents
Document Sharing Hub
Full document details: UL 1018 2003

8.1.6 A flexible cord shall be permanently attached to the appliance.

Documents
Document Sharing Hub

Full document details: UL 1018 2003

Figure 8.1
Connections to attachment plug

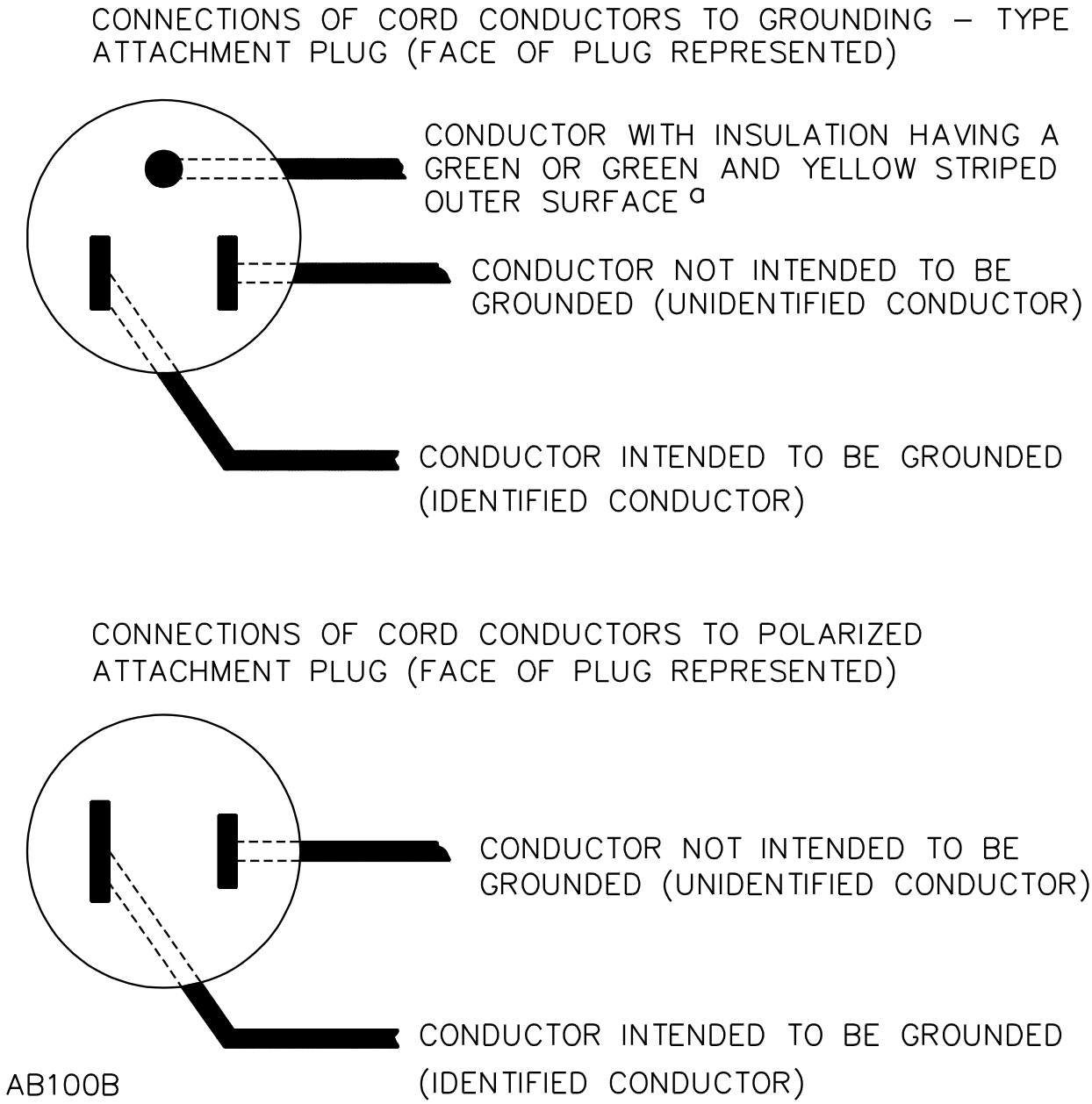

[a] In the above illustration, the blade to which the green conductor is connected may have a U-shape instead of a circular cross section.

Documents
Document Sharing Hub
Full document details: UL 1018 2003