UL 1026

# Underwriters Laboratories Inc.

## Standard for Safety

# Electric Household Cooking and Food Serving Appliances

Documents
Document Sharing Hub
Full document details: UL 1026 2009

Documents
Document Sharing Hub

Full document details: UL 1026 2009

UL Standard for Safety for Electric Household Cooking and Food Serving Appliances, UL 1026

Fifth Edition, Dated January 31, 2007

***Summary of Topics***

***This revision of ANSI/UL 1026 includes the following changes in requirements:***

***Updates to the outdoor cord designations***

***Editorial updates to reference standards***

Text that has been changed in any manner or impacted by UL's electronic publishing system is marked with a vertical line in the margin. Changes in requirements are marked with a vertical line in the margin and are followed by an effective date note indicating the date of publication or the date on which the changed requirement becomes effective.

The revised requirements are substantially in accordance with Proposal(s) on this subject dated April 17, 2009.

All rights reserved. No part of this publication may be reproduced, stored in a retrieval system, or transmitted in any form by any means, electronic, mechanical photocopying, recording, or otherwise without prior permission of UL.

UL provides this Standard ″as is″ without warranty of any kind, either expressed or implied, including but not limited to, the implied warranties of merchantability or fitness for any purpose.

In no event will UL be liable for any special, incidental, consequential, indirect or similar damages, including loss of profits, lost savings, loss of data, or any other damages arising out of the use of or the inability to use this Standard, even if UL or an authorized UL representative has been advised of the possibility of such damage. In no event shall UL's liability for any damage ever exceed the price paid for this Standard, regardless of the form of the claim.

Users of the electronic versions of UL's Standards for Safety agree to defend, indemnify, and hold UL harmless from and against any loss, expense, liability, damage, claim, or judgment (including reasonable attorney's fees) resulting from any error or deviation introduced while purchaser is storing an electronic Standard on the purchaser's computer system.

The requirements in this Standard are now in effect, except for those paragraphs, sections, tables, figures, and/or other elements of the Standard having future effective dates as indicated in the note following the affected item. The prior text for requirements that have been revised and that have a future effective date are located after the Standard, and are preceded by a ″SUPERSEDED REQUIREMENTS″ notice.

Documents
Document Sharing Hub

Full document details: UL 1026 2009

No Text on This Page

Documents
Document Sharing Hub

Full document details: UL 1026 2009

**JANUARY 31, 2007**
(Title Page Reprinted: September 10, 2009)

**ANSI/UL 1026-2009**

**1**

# UL 1026

## Standard for Electric Household Cooking and Food Serving Appliances

Prior to the first edition, the requirements for the products covered by this Standard were included in the Standard for Electric Heating Appliances, UL 499.

First Edition – November, 1975
Second Edition – March, 1981
Third Edition – September, 1988
Fourth Edition – July, 1995

**Fifth Edition**

**January 31, 2007**

This ANSI/UL Standard for Safety consists of the Fifth edition including revisions through September 10, 2009.

The most recent designation of ANSI/UL 1026 as an American National Standard (ANSI) occurred on August 20, 2009. ANSI approval for a standard does not include the Cover Page, Transmittal Pages, Title Page, or effective date information.

Comments or proposals for revisions on any part of the Standard may be submitted to UL at any time. Proposals should be submitted via a Proposal Request in UL's On-Line Collaborative Standards Development System (CSDS) at http://csds.ul.com.

UL's Standards for Safety are copyrighted by UL. Neither a printed nor electronic copy of a Standard should be altered in any way. All of UL's Standards and all copyrights, ownerships, and rights regarding those Standards shall remain the sole and exclusive property of UL.

**COPYRIGHT © 2009 UNDERWRITERS LABORATORIES INC.**

Documents
Document Sharing Hub

Full document details: UL 1026 2009

No Text on This Page

Documents
Document Sharing Hub

Full document details: UL 1026 2009

## CONTENTS

### INTRODUCTION

1 Scope . . . . . 6
2 Components . . . . . 6
3 Undated References . . . . . 7
4 Units of Measurement . . . . . 7
5 Glossary . . . . . 7

### CONSTRUCTION

6 General . . . . . 7
7 Frame and Enclosure . . . . . 7
8 Assembly . . . . . 16
9 Stability . . . . . 16
10 Corrosion Protection . . . . . 16
11 Supply Connections . . . . . 17
11.1 Permanently connected appliances . . . . . 17
11.2 Cord-connected appliances . . . . . 19
12 Current-Carrying Parts . . . . . 26
13 Internal Wiring . . . . . 26
13.1 General . . . . . 26
13.2 Protection of wiring . . . . . 27
13.3 Splices . . . . . 28
13.4 Separation of circuits . . . . . 28
14 Heating Elements . . . . . 30
15 Electrical Insulation . . . . . 31
16 Thermal Insulation . . . . . 32
17 Motors . . . . . 32
18 Motor-Running Overcurrent (Overload) Protection . . . . . 32
19 General (Short-Circuit and Ground-Fault) Overcurrent Protection . . . . . 33
20 Overcurrent and Over-Temperature Protection . . . . . 33
21 Lampholders . . . . . 34
22 Power-On Indicator – Toaster Ovens, Toaster Oven/Broilers . . . . . 34
23 Switches . . . . . 35
24 Dual Voltage Appliance . . . . . 36
25 Automatic Controls and Control Circuits . . . . . 36
26 Overheating Protection . . . . . 37
27 Spacings . . . . . 38
28 Grounding . . . . . 39
29 Pressure Vessels and Parts Subject to Pressure . . . . . 41
30 Protection Against Personal Injury . . . . . 43

### PERFORMANCE

31 General . . . . . 44
32 Power Input Test . . . . . 44
33 Leakage Current Tests . . . . . 44
34 Operational Tests . . . . . 47
35 Calibration of Probe-Type Temperature Controls Tests . . . . . 48
35.1 Ovens . . . . . 48

Documents
Document Sharing Hub
Full document details: UL 1026 2009

35.2 Other appliances . . . . . 48
35.3 All appliances . . . . . 48
36 Normal Temperature Test . . . . . 49
36.1 General . . . . . 49
36.2 Specific test condition . . . . . 56
37 Top-Front Edge Temperatures – Convection Ovens Tests . . . . . 58
38 Tests for Insulation Resistance and Leakage Current as a Result of Moisture . . . . . 60
39 Dielectric Voltage-Withstand Test . . . . . 63
40 Mechanical Endurance Test . . . . . 64
41 Broken Element Test . . . . . 64
42 Push-Back Relief Test . . . . . 65
43 Overflow Test . . . . . 65
43.1 General . . . . . 65
43.2 Fill . . . . . 66
44 Glass Window or Door Impact Test . . . . . 66
45 Handle Impact Test for Slow Cookers . . . . . 66
46 Metal Enclosure Impact Tests . . . . . 67
47 Non-Metallic Enclosure-Fasteners Test . . . . . 69
48 Thermal Degradation Test . . . . . 73
49 Abnormal Operation Test . . . . . 73
49.1 General . . . . . 73
49.2 Specific test conditions . . . . . 75
50 Impact Test for Under-Cabinet and Wall-Mounted Appliances . . . . . 80
51 Loading Test . . . . . 80
52 Handle Strength Test for Slow Cookers . . . . . 81
53 Temperature Probe Insertion Test . . . . . 82
54 Component Switches and Control Devices . . . . . 82
54.1 Overload . . . . . 82
54.2 Endurance . . . . . 84
54.3 Limited short circuit – Motor-control devices . . . . . 86
55 Permanence of Marking . . . . . 86
56 Test for Permanence of Cord Tag for Outdoor-Use Appliances . . . . . 87

**MANUFACTURING AND PRODUCTION-LINE TESTS**

57 Dielectric Voltage-Withstand Test . . . . . 88
58 Polarization and Grounding Continuity Tests . . . . . 90
58.1 Polarization test . . . . . 90
58.2 Continuity of grounding connection . . . . . 90
58.3 Electrical indicating device . . . . . 90

**RATINGS**

59 Details . . . . . 90

**MARKINGS**

60 Details . . . . . 91
61 Carton Marking . . . . . 95

Documents
Document Sharing Hub
Full document details: UL 1026 2009

## INSTRUCTION MANUAL

62 General . . . . . .95
63 All Appliances . . . . . .96
64 Specific Appliances . . . . . .97
65 User Maintenance . . . . . .100

## APPENDIX A

Standards for Components. . . . . A1

## APPENDIX B

B.1 Food Color Charts . . . . . .B1

Documents
Document Sharing Hub
Full document details: UL 1026 2009

## INTRODUCTION

### 1 Scope

1.1 These requirements cover electric household cooking and food serving appliances, rated at 250 V or less, other than those mentioned in 1.2, for use in ordinary locations, including appliances intended for casual and permanent outdoor use, in accordance with the National Electrical Code, NFPA 70.

1.2 These requirements do not cover household electric ranges, electrode type appliances, skillets and frying type appliances, fondues, woks, tempuras, corn poppers, coffee makers and brewing type appliances, commercial cooking appliances, microwave cooking appliances, or appliances that are covered in individual requirements that are separate from this standard.

1.3 For the purposes of this Standard, a requirement that applies to one type of equipment is identified by a specific reference to the type of equipment involved (for example, toaster, rotisserie, or other specific appliance). In the absence of such specific reference or if the term ″appliance″ is employed, it is to be understood that the requirement applies to all types of equipment covered by the Standard.

### 2 Components

2.1 Except as indicated in 2.2, a component of a product covered by this Standard shall comply with the requirements for that component. See Appendix A for a list of standards covering components generally used in the products covered by this Standard.

2.2 A component is not required to comply with a specific requirement that:

a) Involves a feature or characteristic not required in the application of the component in the product covered by this standard, or

b) Is superseded by a requirement in this standard.

2.3 A component shall be used in accordance with its rating established for the intended conditions of use.

2.4 Specific components are incomplete in construction features or restricted in performance capabilities. Such components are intended for use only under limited conditions, such as certain temperatures not exceeding specified limits, and shall be used only under those specific conditions.

Documents
Document Sharing Hub
Full document details: UL 1026 2009

## 3 Undated References

3.1 Any undated reference to a code or standard appearing in the requirements of this standard shall be interpreted as referring to the latest edition of that code or standard.

## 4 Units of Measurement

4.1 Values stated without parentheses are the requirement. Values in parentheses are explanatory or approximate information.

## 5 Glossary

5.1 For the purpose of this standard the following definitions apply.

5.2 LINE-VOLTAGE CIRCUIT – A line-voltage circuit is one involving a potential of not more than 250 V and having circuit characteristics in excess of those of a low-voltage circuit. A circuit derived from a source of supply classified as a line-voltage circuit, by connecting resistance in series with the supply circuits as a means of limiting the voltage and current, is not considered to be a low-voltage circuit as described in 5.3.

5.3 LOW-VOLTAGE CIRCUIT – A low-voltage circuit is one involving a potential of not more the 30 V and supplied by a primary battery, by a standard Class 2 transformer, or by an impedance that, as a unit, complies with all of the performance requirements for Class 2 transformer.

# CONSTRUCTION

## 6 General

6.1 If the operation of an appliance involves the generation and confining under pressure of steam or other gas, consideration shall be given to the possibility of an explosion risk incident to such operation. The appliance shall not be acceptable unless its strength is adequate with respect to any explosion risk that may be involved.

## 7 Frame and Enclosure

7.1 The frame and enclosure of an appliance shall be sufficiently strong and rigid to resist the abuses likely to be encountered during intended service. The degree of resistance inherent in the appliance shall preclude total or partial collapse with the attendant reduction of spacings, loosening or displacement of parts, and other serious defects that alone or in combination constitute an increase in the risk of fire, electric shock, or injury.

7.2 An appliance shall be provided with an enclosure of material acceptable for the particular application, which shall house all electrical parts, except for a supply cord, and except for an open-wire-element unit as mentioned in 15.3 and 15.4 that may present a risk of fire, shock, or injury under any condition of use. If an appliance is intended for permanent connection to the power supply, the enclosure shall be provided with means for mounting in the intended manner and shall be furnished with any necessary fittings, such as brackets, hangers, or the like.

Documents
Document Sharing Hub

Full document details: UL 1026 2009

7.3 In the case of an appliance employing oil or grease in its normal cooking operation, special consideration shall be given to the need for an enclosure over the cooking compartment, and to the acceptability for the purpose of the material employed for such an enclosure.

7.4 If openings for ventilation are provided in the enclosure of an appliance or in an externally mounted component intended for permanent connection to the power supply, they shall be located so that they do not vent into concealed spaces of a building structure such as into false-ceiling space, into hollow spaces in the wall, or the like, when the appliance is installed as intended.

7.5 Among the factors that shall be considered when an enclosure is being judged for acceptability are its:

a) Physical strength;

b) Resistance to impact;

c) Moisture-absorptive properties;

d) Combustibility;

e) Resistance to corrosion; and

f) Resistance to distortion at temperatures to which the enclosure may be subjected under conditions of normal or abnormal use.

For a nonmetallic enclosure, see the enclosure requirements in the Standard for Polymeric Materials – Use in Electrical Equipment Evaluations, UL 746C. A metal enclosure or enclosure part shall be tested in accordance with Metal Enclosure Impact Tests, Section 46, for resistance to impact.

*Exception No. 1: When considering the abnormal and severe conditions tests of UL 746C, the appliance enclosure is to be judged under the abnormal operations tests of Abnormal Operation Test, Section 49, of this standard.*

*Exception No. 2: Thermoset materials need not be subjected to the relative thermal capability requirements of UL 746C. For a thermoset material operating at a temperature above its temperature rating, the 1000 hour aging test as outlined in 48.1 shall be conducted.*

7.6 A thermoplastic enclosure of an appliance provided with overheating protection (Overheating Protection, Section 26) need not comply with the flammability requirements of UL 746C if a material rated HB, and possessing 60 arcs minimum resistance to high current arc ignition, and 7 second minimum resistance to hot wire ignition is employed and all enclosure parts including ribs, grills, and the like are spaced a minimum 1/2 inch (12.7 mm) from uninsulated live parts.

7.7 Cast- and sheet-metal portions of enclosure shall be no thinner than indicated in Table 7.1 unless the enclosure is found to be acceptable when judged under considerations as mentioned in 7.5 and 7.8.

Documents
Document Sharing Hub

Full document details: UL 1026 2009

7.8 In addition to being considered with reference to the factors mentioned in 7.5, an enclosure of sheet metal shall be judged with respect to its size and shape, the thickness of metal, its acceptability for the particular application, and consideration of the intended use of the appliance.

7.9 Electrical parts of an appliance, except the radiating portion of an open-wire element of an automatic toaster, shall be so located or enclosed that protection against unintentional contact with uninsulated live parts is provided (see also 23.7). Insulated motor brush caps do not require additional enclosure.

**Table 7.1**
**Minimum acceptable thicknesses of enclosure metal**

| Metal | At small, flat, unreinforced surfaces and at surfaces that are reinforced by curving, ribbing, and the like (or are otherwise of a shape and/or size) to provide equivalent physical strength | | At surfaces to which a wiring system is to be connected in the field | | At relatively large unreinforced flat surfaces | |
|---|---|---|---|---|---|---|
| | Inches | (mm) | Inches | (mm) | Inches | (mm) |
| Die-cast | 3/64 | (1.2) | – | – | 5/64 | (2.0) |
| Cast malleable iron | 1/16 | (1.6) | – | – | 3/32 | (2.4) |
| Other cast metal | 3/32 | (2.4) | – | – | 1/8 | (3.2) |
| Uncoated sheet steel | 0.026[a] | (0.66[a]) | 0.032 | (0.81) | 0.026 | (0.66) |
| Galvanized sheet steel | 0.029[a] | (0.74[a]) | 0.034 | (0.086) | 0.029 | (0.74) |
| Nonferrous sheet metal | 0.036[a] | (0.91[a]) | 0.045 | (1.14) | 0.036 | (0.91) |

[a] Thinner sheet metal may be employed if found to be acceptable when the enclosure is judged under considerations such those mentioned in 7.5.

7.10 The enclosure shall be constructed so that molten metal, burning insulation, flaming particles, or the like do not fall on the supporting surface.

7.11 The requirement in 7.10 necessitates that an enclosure bottom with an opening be provided with a barrier above or below the opening if the opening is:

a) Under a motor unless:

1) The structural parts of the motor or of the appliance provide the equivalent of such a barrier.

2) The protection provided with the motor is such that no burning insulation or molten material falls to the surface that supports the appliance when the motor is energized under each of the following fault conditions:

i) Open main winding;

ii) Open starting winding;

iii) Starting switch short-circuited; and

Documents
Document Sharing Hub
Full document details: UL 1026 2009

iv) For a permanent-split-capacitor motor the capacitor is short circuited. The short circuit is to be applied before the motor is energized and the rotor is to be blocked,

3) The motor is provided with a thermal motor protector (a protective device that is sensitive to both temperature and current) that prevents the temperature of the motor windings from becoming more than 125°C (257°F) under the maximum load under which the motor runs without causing the protector to cycle, and from becoming more than 150°C (302°F) with the rotor of the motor locked, or

4) The motor complies with the requirements for impedance-protected motors.

b) Under wiring, unless the wiring complies with the VW-1 flame test or the Vertical Flame Test described in the Reference Standard for Electrical Wires, Cables, and Flexible Cords, UL 1581.

c) Under an unenclosed switch, transformer, relay, solenoid, and the like, unless it can be shown that malfunction of the component is not likely to result in a fire.

d) Under field- and factory-made splices and overload and overcurrent protective devices.

*Exception: A barrier is not required if the opening is not within the area under the component requiring a barrier as illustrated by Line D in Figure 7.1.*

Documents
Document Sharing Hub

Full document details: UL 1026 2009

**Figure 7.1**
**Location and extent of barrier**

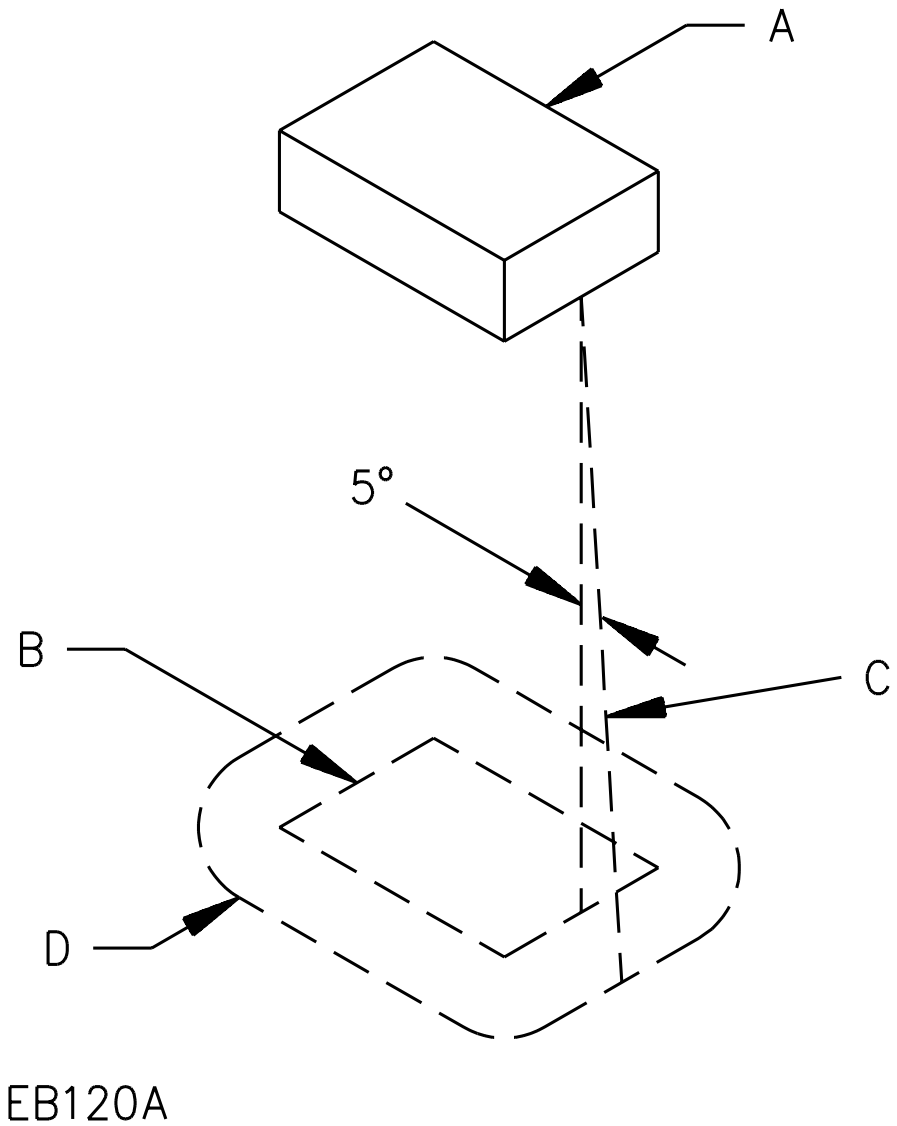


A – Region to be shielded by barrier. This will consist of the entire component if it is not otherwise shielded and will consist of the unshielded portion of a component that is partially shielded by the component enclosure or equivalent.

B – Projection of outline of component on horizontal plane.

C – Inclined line that traces out minimum area of barrier. The line is always:

1) Tangent to the component;

2) 5 degrees from the vertical; and

3) So oriented that the area traced out on a horizontal plane is maximum.

D – Location (horizontal) and minimum area for barrier. The area is that included inside the line of intersection traced out by the inclined line C and the horizontal plane of the barrier.

Documents
Document Sharing Hub
Full document details: UL 1026 2009

7.12 The barrier mentioned in 7.11 shall be:

a) Of metal, ceramic, or a material that is acceptable as an enclosure in accordance with 7.5;

b) Horizontal; and

c) Located as indicated in Figure 7.1, and shall not have an area less than that described in Figure 7.1.

7.13 An opening in the enclosure that has a minor dimension of less than 1 inch (25.4 mm) is acceptable if a probe as illustrated in Figure 7.2, inserted through the opening, cannot be made to touch any uninsulated live part or film-coated wire that involves the risk of electric shock. The probe shall be applied in all possible articulated positions before, during, and after insertion.

7.14 An opening that has a minor dimension of 1 inch (25.4 mm) or more, in an enclosure, as illustrated in Figure 7.3, is acceptable if, within the enclosure, there is no uninsulated live part or film-coated wire less than, R distance from the inside edge of the perimeter of the opening and X distance from the plane of the opening. T equals the enclosure thickness, R equals X minus T, and X equals five times the diameter of the largest round rod that can be inserted through the opening but not less than 6-1/16 inches (154 mm). In evaluating an opening, any barrier located within the volume is to be ignored unless it intersects the boundaries of the volume in a continuous closed line.

7.15 If a marking draws attention of the user to a hole of any size in the enclosure for the adjustment of a thermostat or for a similar activity, it shall not be possible to damage insulation or contact uninsulated live parts through the hole with a 1/16-inch-diameter rod (1.6 mm).

7.16 During the examination of an appliance in connection with the requirements in 7.9 and 7.13 – 7.15, any part of the enclosure shall be disregarded (opened or removed) – that is, it shall not be assumed that the part in question affords protection against electric shock or injury to persons – if it either:

a) Must be opened or removed, with or without the use of tools, to perform manufacturer's recommended user servicing, maintenance, operating adjustments, attachment of accessories, or other instructions; or

b) Can be opened or removed without the use of tools. See 7.17.

*Exception: A part that requires a tool for opening or removal to perform manufacturer's recommended user servicing, maintenance, operating adjustments, attachment of accessories, or other instructions shall remain in place if the appliance is marked in accordance with 60.9.*

7.17 With reference to 7.16(b), to determine that a part of an enclosure requires the use of tools for opening or removal, the enclosure or any part of the enclosure that relies for mechanical securement on non-metallic parts, such as plastic tabs or snap-action inserts and posts, shall comply with Non-Metallic Enclosure-Fasteners Test, Section 47.

*Exception: An enclosure or enclosure part secured entirely by metallic fasteners (such as screws or rivets) to other enclosure parts is not required to be subjected to this test.*

Documents
Document Sharing Hub
Full document details: UL 1026 2009

**Figure 7.2**
**Accessibility probe**

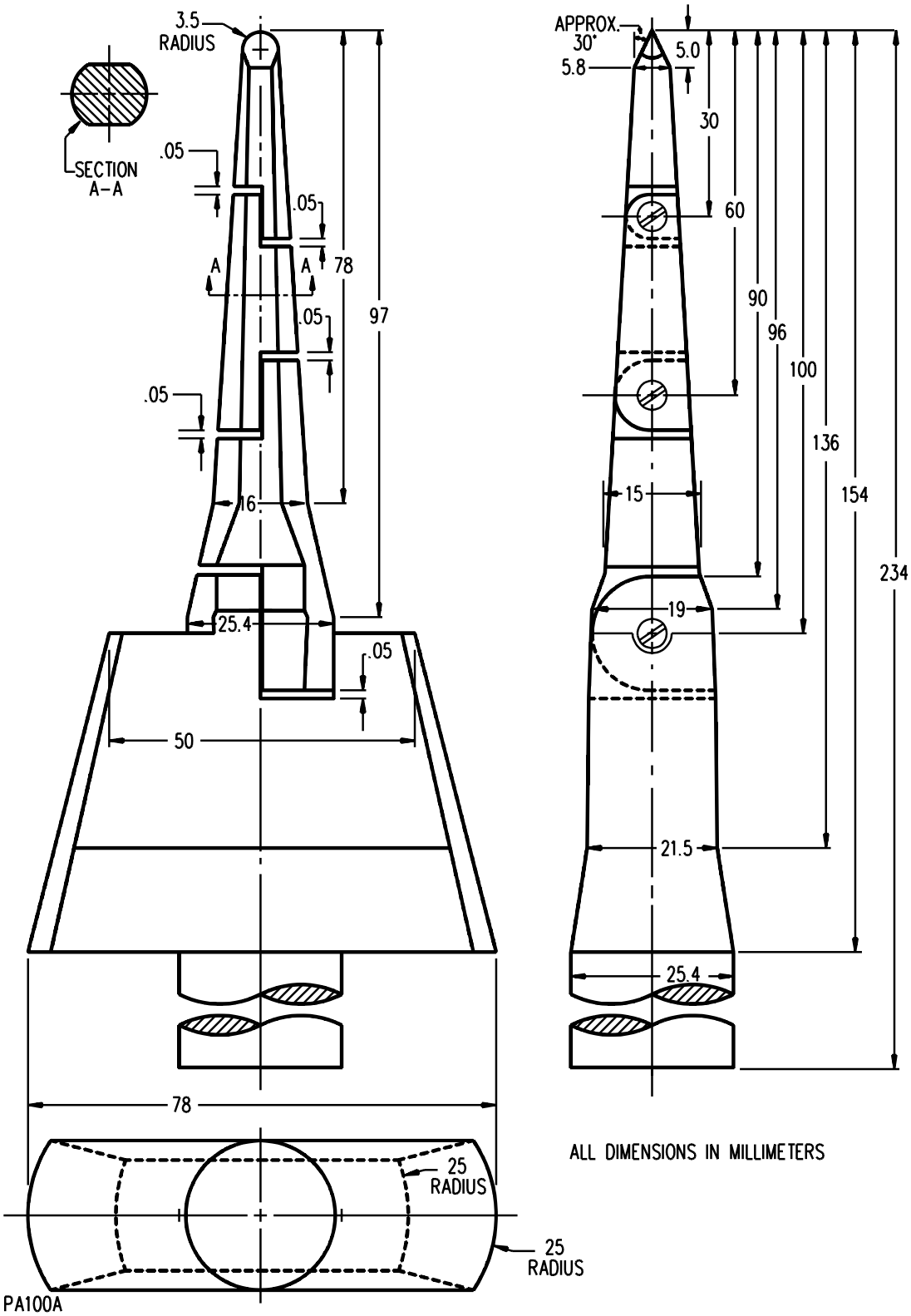


Documents
Document Sharing Hub
Full document details: UL 1026 2009

**Figure 7.3**
**Opening in enclosure**

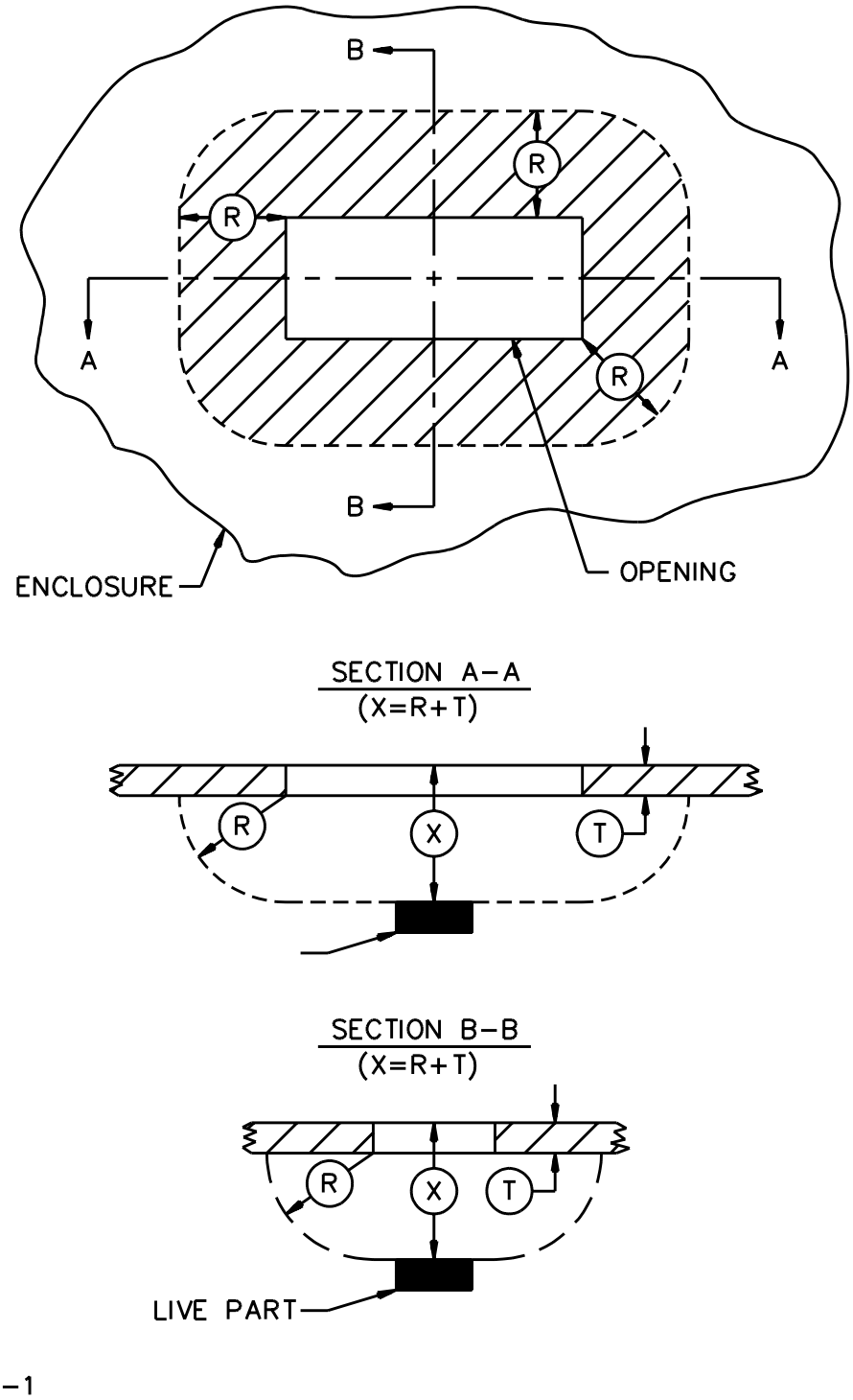


Proportions exaggerated for clarity

Documents
Document Sharing Hub
Full document details: UL 1026 2009

7.18 Any moving parts, such as rotors of motors, chains, pulleys, belts, and gears, shall be enclosed or guarded to reduce the likelihood of injury to persons.

7.19 With reference to the requirements in 7.18, the degree of protection required of the enclosure depends upon the general construction and intended use of the appliance. The factors to be taken into consideration in judging the acceptability of exposed moving parts are:

a) The degree of enclosure;

b) The sharpness of the moving parts;

c) The likelihood of unintentional contact with the moving parts;

d) The speed of movement of those parts; and

e) The likelihood of fingers, arms, or clothing being drawn into the moving parts (such as at points where gears mesh, where belts travel onto a pulley or where moving parts close in a pinching or shearing action).

7.20 The door or cover of an enclosure shall be provided with means for holding it securely in place in the closed position.

7.21 The door or cover of an enclosure shall be hinged or otherwise attached in an equivalent manner if it gives access to any overload protective device whose functioning requires renewal, or if it is necessary to open the cover in connection with the operation of the protective device. Such a door or cover shall be provided with a latch or the equivalent, and shall be tight-fitting or shall overlap the surface of the enclosure around the opening.

7.22 A component of an appliance shall be readily accessible without the use of special tools (tools not available to other than service personnel) if it is intended to be manually operated or adjusted or periodically serviced.

7.23 The bulb and capillary tube of a thermostat shall be protected from mechanical damage if damage of the tube or bulb increases the risk of fire.

Documents
Document Sharing Hub

Full document details: UL 1026 2009

## 8 Assembly

8.1 A switch, lampholder, attachment-plug receptacle, plug-type receptacle, or plug-type connector provided as part of an appliance shall be mounted securely and prevented from turning by means other than friction between surfaces.

8.2 A lock washer properly applied is acceptable as a means to prevent turning of a stem-mounted switch.

8.3 Uninsulated live parts shall be secured to the base or surface so that they are prevented from turning or shifting in position as a result of stresses, if such motion may result in a reduction of spacings below the minimum required in 27.1 – 27.4.

8.4 Friction between surfaces is not acceptable as a means to prevent shifting or turning of live parts, but a lock washer properly applied is acceptable.

## 9 Stability

9.1 The stability of an appliance shall be such that it cannot be readily overturned during intended use.

9.2 A household cooking or warming appliance that is easily carried or conveyed by hand (such as a slow cooker, food warmer, and the like) in which liquids are heated to a temperature greater than 115°F (46°C) shall be placed on a plane inclined at an angle of 15 degrees to the horizontal. All other appliances shall be placed on a plane inclined at an angle of 10 degrees to the horizontal. The appliance shall be positioned and loaded with whatever combination of separable components, liquid, or other media (material) that results in the maximum tendency to overturn under conditions of intended use. Appliances in which liquids are heated shall contain a minimum of 5 ounces (148 mL) of liquid. The appliance shall be prevented from sliding on the inclined surface. The appliance shall not overturn as a result of this test.

9.2 effective February 11, 2007

## 10 Corrosion Protection

10.1 Iron and steel parts shall be protected against corrosion by enameling, galvanizing, plating, or other equivalent means, if the malfunction of such unprotected parts increases the risk of fire or electric shock.

*Exception: In certain equipment where the oxidation of steel is not likely to be accelerated due to the exposure of metal to air and moisture or other oxidizing influence – thickness of metal and temperature also being factors – surfaces of sheet steel within an enclosure may not be required to be protected against corrosion. Cast-iron parts are not required to be protected against corrosion. A sheath employed on a heating element operating in air and terminal parts attached directly to the heating element need not be protected against corrosion.*

10.2 The aging characteristics of plating or other finish used in an appliance shall be such that deterioration of the finish does not result in unacceptable performance of the appliance.

Documents
Document Sharing Hub
Full document details: UL 1026 2009

## 11 Supply Connections

### 11.1 Permanently connected appliances

11.1.1 General

11.1.1.1 Except as noted in 11.1.1.2, an appliance intended for permanent connection to the power supply shall have provision for connection of one of the wiring systems that, in accordance with the National Electrical Code, NFPA 70, is acceptable for the appliance.

11.1.1.2 An appliance that is intended to be fastened in place or located in a dedicated space may be acceptable if provided with a short length of appropriate flexible cord and an attachment plug for supply connection. The investigation of such a feature shall include consideration of the utility of the appliance and the necessity of having it readily detachable from its source of supply by means of the attachment plug.

11.1.1.3 The location of a terminal box or compartment in which power-supply connections to a permanently connected appliance are to be made shall be such that these connections can be readily inspected after the appliance is installed as intended.

11.1.1.4 A terminal compartment intended for the connection of a supply raceway shall be attached to the appliance in a manner to prevent turning.

11.1.2 Field wiring terminals

11.1.2.1 An appliance intended for permanent connection to the power supply shall be provided with wiring terminals or leads for the connection of conductors having an ampacity of not less than 125 percent of the current rating of the appliance when the load is continuous (3 hours or more) and not less than the current rating of the appliance when the load will be intermittent.

11.1.2.2 For the purpose of these requirements, wiring terminals are considered to be terminals to which power-supply or control connections are made in the field when the appliance is installed.

11.1.2.3 A wiring terminal shall be provided with a soldering lug or with a pressure wire connector securely fastened in place (for example, firmly bolted or held by a screw), except that a wire-binding screw may be employed at a wiring terminal intended to accommodate a 10 AWG (5.3 $mm^2$) or smaller conductor if upturned lugs or the equivalent are provided to hold the wire in position.

11.1.2.4 A wiring terminal shall be prevented from turning or shifting in position by means other than friction between surfaces. This may be accomplished by two screws, rivets, square shoulders or mortises, a dowel pin, lug or offset, by a connecting strap or clip fitted into an adjacent part, or by some other equivalent method.

11.1.2.5 A wire-binding screw at a wiring terminal shall not be smaller than No. 10, except that a No. 8 screw may be used at a terminal intended for the connection of a 14 AWG (2.1 $mm^2$) or smaller conductor, and a No. 6 screw may be used for the connection of a 16 AWG (1.3 $mm^2$) or smaller control-circuit conductor.

Documents
Document Sharing Hub
Full document details: UL 1026 2009

11.1.2.6 A terminal plate tapped for a wire-binding screw shall be of metal not less than 0.050 inch (1.3 mm) thick, except that a plate not less than 0.030 inch (0.8 mm) thick is acceptable if the tapped threads provide equivalent mechanical strength. There shall be two or more full threads in the metal, which may be extruded if necessary to provide the threads.

11.1.2.7 Upturned lugs or a cupped washer shall be capable of retaining a conductor of the size mentioned in 11.1.2.1, but not smaller than 14 AWG (2.1 $mm^2$), under the head of the screw or the washer.

11.1.2.8 A wire-binding screw shall thread into metal.

11.1.2.9 An appliance intended for connection to a grounded power-supply conductor and employing a lampholder or element holder of the Edison-screw-shell type, a single-pole switch, or a single-pole automatic control shall have one terminal or lead identified for connection of the grounded conductor of the supply circuit. The terminal or lead so identified shall be the one that is connected to screw shells of lampholders or element holders, and with no connections to single-pole switches or single-pole automatic controls, except as noted in 25.2.

11.1.2.10 A terminal intended for the connection of a grounded circuit conductor shall be made of or plated with a metal substantially white in color and shall be readily distinguishable from the other terminals, or proper identification of that terminal shall be clearly shown in some other manner, such as on an attached wiring diagram. A lead intended for the connection of a grounded circuit conductor shall be finished to show a white or gray color and shall be readily distinguishable from the other leads.

11.1.2.11 Except as noted in 11.1.2.12, the free length of a lead inside an outlet box or wiring compartment shall be 6 inches (152 mm) or more if the lead is intended for field connection to an external circuit.

11.1.2.12 A lead may be less than 6 inches (152 mm) in length if it is evident that the use of a longer lead results in an increased risk of fire or electric shock.

11.1.2.13 The surface of an insulated lead intended solely for the connection of an equipment-grounding conductor shall be green with or without one or more yellow stripes, and no other lead shall be identified.

11.1.2.14 A wire-binding screw intended for connection of an equipment-grounding conductor shall have a green-colored head that is hexagonal, slotted, or both. A pressure terminal connector intended for connection of an equipment-grounding conductor shall be plainly identified by:

a) A marking, such as ″G ″, ″GR ″, ″GND″, ″Ground ″, ″Grounding ″, or the like;

b) A wiring diagram provided on the appliance; or

c) The grounding symbol illustrated in Figure 11.1, on or adjacent to the terminal, or on a wiring diagram provided on the appliance.

The wire-binding screw or pressure terminal connector shall be located so that it does not require removal during normal servicing of the appliance.

Documents
Document Sharing Hub
Full document details: UL 1026 2009

**Figure 11.1**
**Grounding Symbol**

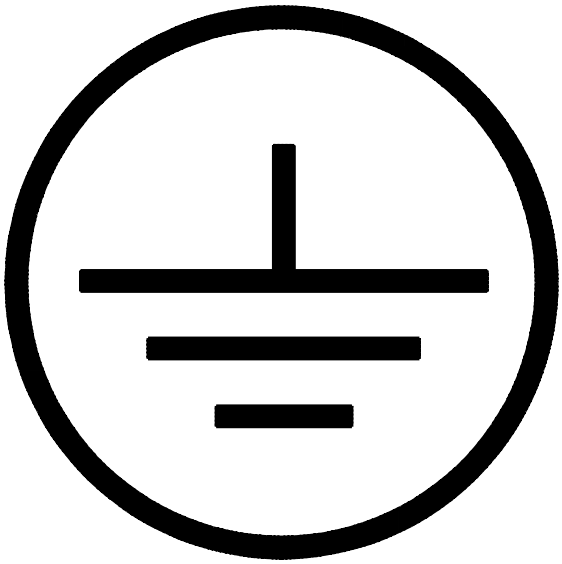

IEC417, Symbol 5019

11.1.2.15 A terminal solely for connection of an equipment-grounding conductor shall be capable of securing a conductor of the proper size for the particular appliance.

**11.2 Cord-connected appliances**

11.2.1 General

11.2.1.1 A cord-connected appliance (an appliance intended to be connected to the power-supply circuit by means of a flexible cord) shall be provided with a power-supply cord for connection to the supply circuit, or shall have male pin terminals that accommodate a detachable power-supply cord. The length of attached cord or separable cord shall be within the limit indicated in Table 11.1.

11.2.1.2 For a cord-connected appliance, the rating (both current and voltage) of the cord and the fittings, shall not be less than that of the appliance. The current rating of the attachment plug shall not be less than 125 percent of the current rating of the appliance when the load will constitute a continuous load (3 hours or more).

11.2.1.3 An attached flexible cord and the cord in a detachable power-supply cord that is provided with an appliance shall be of a type indicated in Table 11.2, or shall have such properties that it will be at least equally as serviceable for the particular application.

Documents
Document Sharing Hub

Full document details: UL 1026 2009

11.2.1.4 In the case of a broiler attachment intended for use on a roaster, a detachable power-supply cord acceptable for the purpose shall be supplied with the roaster, and no additional detachable power-supply cord shall be provided with either the roaster or the broiler.

**Table 11.1**
**Lengths of cord connection**

| Type of appliance | Kind of cord connection | Minimum acceptable length[a] | | Maximum acceptable length[a] | |
|---|---|---|---|---|---|
| | | Feet | (Meters) | Feet | (Meters) |
| All counter top or table-top appliances | Attached cord or detachable power supply cord | 2.0 | (0.6) | 7.0 | (2.1) |
| All appliances intended for outdoor use | Attached cord or detachable power supply cord | 1.0 | (0.3) | 12.0 | (3.6) |
| All appliances not covered above | Attached cord or detachable power supply cord | 6.0 | (1.8) | 7.0 | (2.1) |

[a] Measured external to the appliance and including the fittings but excluding the blades on the attachment plug.

**Table 11.2**
**Acceptable types of cord and limitations on their use**

Table 11.2 revised September 10, 2009

| Appliance on which the cord is to be used | Cords acceptable where temperatures are more than 121°C (250°F) on any surface that the cord is likely to touch when the appliance is used as intended | Cords acceptable where temperatures are 121°C (250°F) or less on any surface that the cord is likely to touch when the appliance is used as intended |
|---|---|---|
| Except as noted below, table stoves, toasters and other appliances that are not intended for use outdoors | HPD, HPN, HSJ, or HSJO | HPD, HPN, HSJ, HSJO, SP-2, SPE-2, SPT-2, SV, SVE, SVO, SVT, SVTO, SJ, SJE, SJO, SJT or SJTO |
| Barbecue-spit motor | SJE, SJO, SJT, or SJTO | SJE, SJO, SJT, or SJTO |
| Appliances intended for outdoor use | HSJW or HSJOW | HSJW, HSJOW, SJW, SJEW, SJOW, SJTW or SJTOW |

11.2.1.5 Supplementary insulation, if employed in a flexible cord, shall not extend more than 1/2 inch (13 mm) outside the appliance, unless provided with additional mechanical protection, and shall be prevented from fraying or unraveling, and shall not affect adversely the means for providing strain relief.

11.2.1.6 A 3- to 2-wire, grounding-type adapter shall not be provided with an appliance.

11.2.1.7 The attachment plug of the power supply cord of an appliance provided with a 15- or 20- ampere general use receptacle shall be of the 3-wire grounding type. The attachment plug of the power supply cord of an appliance provided with a manually operated, line-connected, single pole switch for appliance on-off operation or an Edison-base lampholder shall be of the polarized or grounding type.

11.2.1.8 If a 3-wire grounding-type attachment plug or a 2-wire polarized attachment plug is provided, the attachment plug connection shall comply with Figure 11.2 and the polarity identification of the flexible cord shall comply with Table 11.3.

Documents
Document Sharing Hub
Full document details: UL 1026 2009

11.2.1.9 The conductor of the power supply cord that is intended to be grounded shall have the following items connected to it:

a) The screw shell of an Edison-base lampholder; and

b) The terminal or lead of a receptacle intended to be grounded.

Table 11.3 identifies the supply cord conductor intended to be grounded.

Documents
Document Sharing Hub

Full document details: UL 1026 2009

**Figure 11.2**
**Connection to attachment plug**

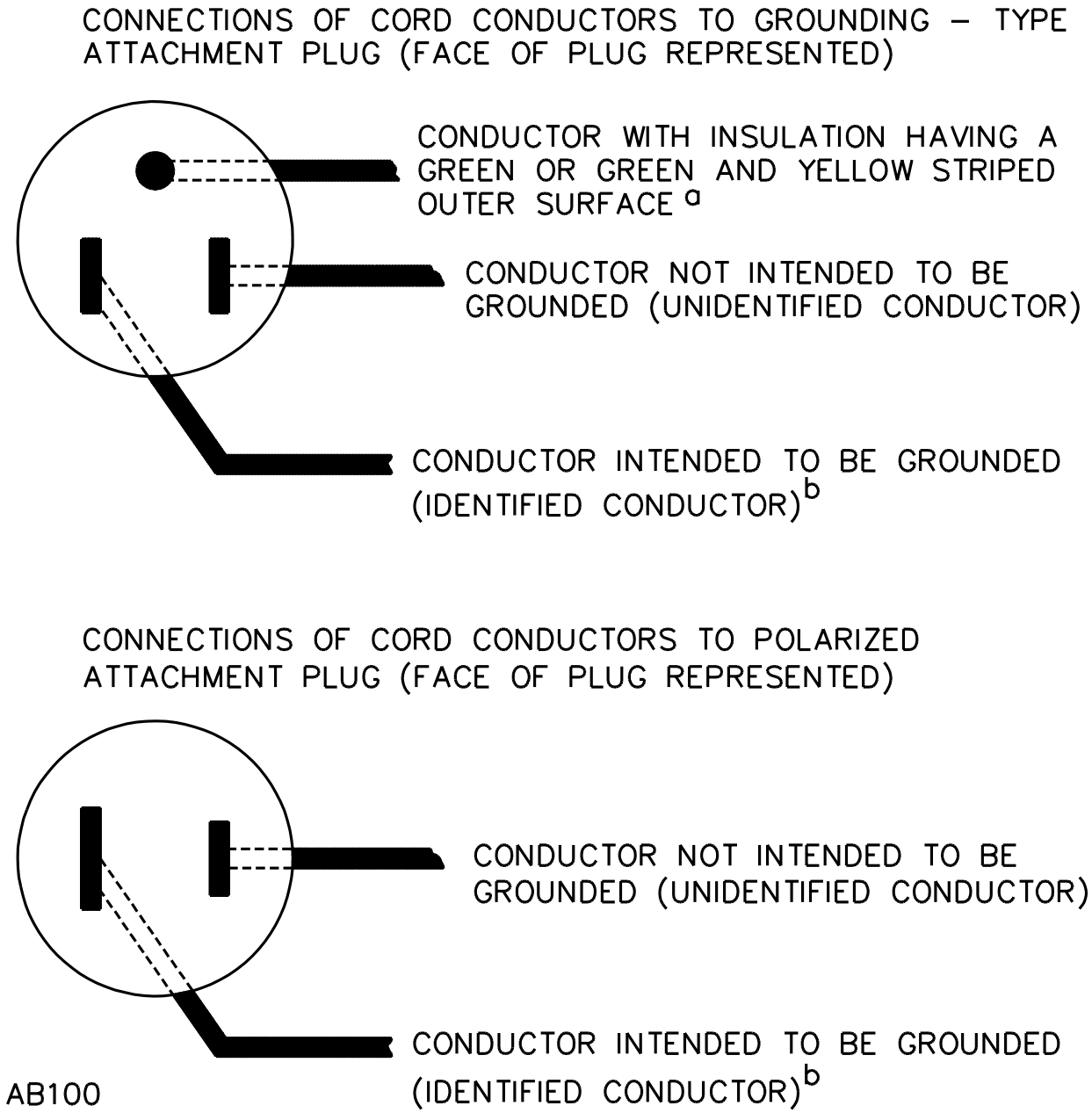


[a] In the above illustration, the blade to which the green conductor is connected may have a U-shaped or circular cross section.

[b] Signifies a conductor identified in accordance with Table 11.3

Documents
Document Sharing Hub
Full document details: UL 1026 2009

**Table 11.3**
**Polarity of identification of flexible cords**

| Method of identification | Acceptable combinations | | |
|---|---|---|---|
| | Wire intended to be grounded[d] | | All other wires[d] |
| Color of braids on individual conductors | A | Solid white or gray – without tracer | Solid color other than white or gray – without tracer |
| | B | Color other than white or gray with tracer in braid | Solid color other than white or gray – without tracer |
| Color of insulation on individual conductors | C[a] | Solid white or gray | Solid color other than white, or gray |
| | C1[e] | Light blue | Solid color other than light blue, white, or gray |
| Color of separators | D[b] | White or gray | Color other than white or gray |
| Other means | E[c] | Tin or other white metal on all strands of the conductor | No tin or other white metal on the strands of the conductor |
| | F[b] | A stripe, ridge or groove on the exterior surface of the cord | |

[a] Only for cords – other than Type SP-1, and SPT-1 – having no braid on any individual conductor.
[b] Only for Types SP-1, SP-2, SPT-1, and SPT-2 cords.
[c] Only for Type SPT-1 and SPT-2 cords.
[d] A wire finished to show a green cord with or without one or more yellow stripes or tracers is to be used only as an equipment grounding conductor. See 28.3 and Figure 11.2.
[e] For jacketed cords.

11.2.2 Strain relief

11.2.2.1 Strain relief shall be provided to prevent a mechanical stress on an attached flexible supply cord from being transmitted to terminals, splices, or interior wiring.

11.2.2.2 If wood, pressed board, or other fibrous material is used to secure the strain-relief assembly, the fibrous material shall be secured to the appliance by a pin, setscrew, or other positive means.

11.2.2.3 Means shall be provided to reduce the likelihood of an attached supply cord or lead from being pushed into the enclosure of an appliance through the cord-entry hole. To determine compliance with this requirement, the supply cord or lead shall be tested in accordance with Push-Back Relief Test, Section 42.

11.2.2.4 If a knot serves as strain relief in an attached flexible cord, any surface with which the knot may come in contact shall be free from projections, sharp edges, burrs, fins, and the like that may cause abrasion of the insulation on the conductors.

11.2.2.5 The strain-relief means provided on an attached flexible cord, when tested in accordance with 11.2.2.6, shall be capable of withstanding for 1 minute, without displacement, a pull of 35 lbf (156 N) applied to the cord, with the connection within the appliance disconnected.

11.2.2.6 The specified force is to be applied to the cord and supported by the appliance so that the strain-relief means is stressed from any angle that the construction of the appliance permits. The strain relief is not acceptable if, at the point of disconnection of the conductors, there is sufficient movement of the cord to indicate that stress on the connections have resulted.

Documents
Document Sharing Hub
Full document details: UL 1026 2009

11.2.3 Pin terminals

11.2.3.1 If an appliance is provided with pin terminals, the construction of the appliance shall be such that no live parts will be exposed to unintentional contact both during and after the placement of the plug on the pins, in the intended manner.

11.2.3.2 A pin guard is required, such that:

a) A straight edge placed in any position, across and in contact with edges of the plug opening without the plug in place, cannot be made to contact any current-carrying pin.

b) With the plug aligned with the pins and the face of the plug in a plane located perpendicular to the end or ends of the farthest projecting current-carrying pin, the probe illustrated in Figure 7.2 should not touch any current-carrying pin while the probe is inserted through any opening with the appliance in any position.

11.2.3.3 The plug used in accordance with 11.2.3.2(b) is to be the plug supplied with the appliance.

11.2.3.4 If an appliance employs three or more pin terminals intended for use with a plug that covers all the pins, the terminals shall be spaced so that they do not accommodate a flatiron or appliance plug or cord-connector body. The plug that these pins accommodate shall be appropriate for the particular application.

11.2.3.5 If an appliance is provided with a user removable heating element, the heating element shall have a guard that shall:

a) Be securely and rigidly mounted by means other than friction alone; and

b) Prevent the heating element pins from being damaged, shorting to the appliance enclosure during insertion or removal, and shifting in position relative to each other.

11.2.3.6 A pin terminal shall be securely and rigidly mounted and shall be prevented from shifting in position by means other than friction between surfaces.

11.2.3.7 The requirement in 11.2.3.6 is intended primarily to provide for maintenance of spacings as given in 27.1 and Tables 27.1 and 27.2 and to provide for the maintenance of proper spacings between pin terminals. Under this requirement, consideration is also given to the means for locking terminals in position to maintain tightness.

11.2.3.8 The dimensions of pins and their center-to-center spacings, including the corresponding spacings of the female contacts of general-use plugs that these arrangements of pins will accommodate, are as indicated in Table 11.4.

11.2.3.9 An appliance provided with three pin terminals, one of which is for grounding, shall not be provided with or capable of being used with a two-conductor detachable power-supply cord.

Documents
Document Sharing Hub

Full document details: UL 1026 2009

11.2.3.10 An appliance provided with two pin terminals shall not be provided with or capable of being used with a three-conductor detachable power-supply cord employing a grounding conductor.

**Table 11.4**
**Pins of appliance and flatiron plugs**

| Type and rating of plug that accommodates the pins | Configuration of pins | | | Dimensions of pins | |
|---|---|---|---|---|---|
| | Number | Arrangement | Spacing between centers, inch (mm) | Diameter, inch (mm) | Length, inch (mm) |
| Appliance plug rated 5 A at 250 V and 10 A at 125 V | 2 | In line | 1/2 (12.7) | 0.156 ±0.005 (3.97 ±0.13) | 9/16 – 5/8 (14.3 – 15.9) |
| Flatiron plug rated 5 A at 250 V and 10 A at 125 V | 2 | In line | 11/16 (17.5) | 0.188 ±0.005 (4.76 ±0.13) | 3/4 – 7/8 (19.0 – 22.2) |
| Jumbo appliance plug rated 10 A at 250 V and 15 A at 125 V | 2 | In line | 1-1/16 (27) | 0.188 ±0.005 (4.76 ±0.13) | 3/4 – 7/8 (19.0 – 22.2) |
| Reversible plug (for two-heat control) rated 10 A at 250 V and 15 A at 125 V[a] | 3 | In line | 7/8 (22.2) | 0.188 ±0.005 (4.76 ±0.13) | 3/4 – 7/8 (19.0 – 22.2) |
| Reversible plug (for two- or three- heat control) rated 10 A at 250 V and 15 A at 125 V[a] | 3 | One pin at apex of an equilateral triangle | 7/8 (22.2) | 0.188 ±0.005 (4.76±0.13) | 3/4 – 7/8 (19.0 – 22.2) |

[a] Usually this plug is made without a contact in one of the holes.

11.2.4 Bushings

11.2.4.1 At a point where a flexible cord passes through an opening in a wall barrier or enclosing case, there shall be a bushing or the equivalent that shall be secured in place, and shall have a smooth, well-rounded surface against which the cord may bear. If Type SP-2, SPT-2, or other cord lighter than Type HSJ is employed, and if the wall or barrier is of metal, and if the construction is such that the cord may be subjected to strain or motion, an insulating bushing shall be provided. The heat- and moisture-resistant properties of the bushing material shall be such that the bushing is acceptable for the particular application.

11.2.4.2 If the cord hole is in wood, porcelain, phenolic composition, or other nonconducting material, a smooth, well-rounded surface is considered to be equivalent to a bushing.

11.2.4.3 Ceramic materials and some molded compositions are usually acceptable for insulating bushings, but a separate bushing of wood, hot-molded shellac and tar composition, or rubber material (other than in a motor) is not acceptable. Vulcanized fiber may be employed if the bushing is not less than 3/64 inch (1.2 mm) thick, and if it is so formed and secured in place that it will not be affected adversely by conditions of ordinary moisture.

11.2.4.4 A separate soft-rubber, neoprene, or polyvinyl chloride bushing may be employed in the frame of a motor or in the enclosure of a capacitor physically attached to a motor (but not elsewhere in an appliance, except as indicated in 11.2.4.5) provided that:

a) The bushing is not less than 3/64 inch (1.2 mm) thick; and

b) The bushing is located so that it is not exposed to oil, grease, oily vapor, or other substance having a deleterious effect on the compound employed.

Documents
Document Sharing Hub
Full document details: UL 1026 2009

11.2.4.5 A bushing of any of the materials mentioned in 11.2.4.4 may be employed at any point in an appliance if used in conjunction with a type of cord for which an insulating bushing is not required, and if the edges of the hole in which the bushing is mounted are smooth and free from burrs, fins, and the like.

11.2.4.6 An insulated metal grommet may be accepted in place of an insulating bushing if the insulating material used is not less than 1/32 inch (0.8 mm) thick, and completely fills the space between the grommet and the metal in which it is mounted.

## 12 Current-Carrying Parts

12.1 Each current-carrying part shall be made of metal that is appropriate for the particular application.

12.2 Current-carrying parts made of corrosion-resistant alloys (for example, stainless steel) are acceptable regardless of temperature. Current-carrying parts made of ordinary iron and steel are not acceptable unless they are rendered corrosion-resistant by an appropriate coating and, even then, they are acceptable only as follows:

a) Pin terminals;

b) Terminal parts and other parts of a motor and its governor (if any);

c) Parts whose normal operating temperature is higher than 100°C (212°F); and

d) Parts of a component that the requirements referred to in 2.1 indicate as being acceptable with coated iron and steel parts.

12.3 If a reservoir is part of an appliance, all live parts shall be located or protected so that they are not subjected to dripping if the reservoir fails, unless:

a) The reservoir is resistant to corrosion from the liquid intended for use in it; and

b) The reservoir does not develop cracks as a result of aging.

## 13 Internal Wiring

### 13.1 General

13.1.1 The internal wiring of an appliance shall consist of wires of a size and type that are acceptable for the particular application, when considered with respect to:

a) The temperature and voltage to which the wiring is likely to be subjected;

b) Its exposure to oil or grease; and

c) Other conditions of service to which it is likely to be subjected.

Documents
Document Sharing Hub
Full document details: UL 1026 2009

13.1.2 There is no temperature limit applicable to unimpregnated glass fiber, beads of inorganic material, or the equivalent employed as conductor insulation.

13.1.3 Thermoplastic-insulated wire employed for the internal wiring of an appliance shall be standard building wire, fixture wire, or appliance wiring material acceptable for the particular application.

**13.2 Protection of wiring**

13.2.1 The wiring and connections between parts of an appliance shall be protected or enclosed, except that a length of flexible cord may be employed for external connections, or for internal connections that may be exposed during servicing, if flexibility of the wiring is essential. A bare conductor or a conductor with beads for insulation shall not be used outside an enclosure.

13.2.2 Internal wiring that is exposed through an opening in the enclosure of an appliance is considered to be protected as required in 13.2.1 if, when judged as if it were film-coated wire, the wiring is acceptable according to 7.9 – 7.13. Internal wiring not protected may be accepted if it is secured within the enclosure so that it is unlikely to be subjected to stress or mechanical damage.

13.2.3 If the wiring of an appliance is located so that it may be in proximity to combustible material or may be subjected to mechanical injury, it shall be armored cable or in rigid metal conduit, electrical metallic tubing, metal raceway, or shall otherwise be protected.

13.2.4 Wires within an enclosure, compartment, raceway, or the like shall be located or protected so that damage to conductor insulation cannot result from contact with any rough, sharp, or moving part.

13.2.5 A hole by means of which insulated wires pass through a sheet-metal wall within the overall enclosure of an appliance shall be provided with a smooth, well-rounded bushing or shall have smooth, well-rounded surfaces upon which the wires may bear, to prevent abrasion of the insulation. A flexible cord used for external inter-connection as mentioned in 13.2.1 shall be provided with strain relief and bushings in accordance with 11.2.2.1 – 11.2.2.6 and 11.2.4.1 – 11.2.4.6 unless the construction is such that the cord will be protected from stress or motion.

13.2.6 Insulated wires may be bunched and passed through a single opening in a metal wall within the enclosure of an appliance.

Documents
Document Sharing Hub

Full document details: UL 1026 2009

### 13.3 Splices

13.3.1 All splices and connections shall be mechanically secure and shall provide acceptable electrical contact. A soldered connection shall be made mechanically secure before being soldered if breaking or loosening of the connection results in risk of fire or electric shock.

13.3.2 A splice shall be provided with insulation equivalent to that of the wires involved if permanence of spacing between the splice and other metal parts of the appliance is not maintained.

13.3.3 Insulation consisting of two layers of friction tape, two layers of thermoplastic tape, or of one layer of friction tape on top of one layer of rubber tape, is acceptable on a splice. In determining whether splice insulation consisting of coated fabric, thermoplastic, or other type of tubing is acceptable, consideration is to be given to such factors as its dielectric properties, heat-resistant and moisture-resistant characteristics. Thermoplastic tape wrapped over a sharp edge is not acceptable.

13.3.4 Where stranded internal wiring is connected to a wire-binding screw, loose strands of wire shall be positively prevented from contacting any other uninsulated live part that is not always of the same polarity as the wire, and from contacting any dead metal part. This may be accomplished by the use of pressure terminal connectors, soldering lugs, crimped eyelets, soldering all strands of the wire together, or other equivalent means.

### 13.4 Separation of circuits

13.4.1 Unless provided with insulation rated for the highest voltage involved, insulated conductors of circuits connected to separate sources of supply shall be separated by barriers or segregated. Except as described in 13.4.3, an insulated conductor of one circuit shall be separated or segregated from any uninsulated live part of a different circuit.

13.4.2 Segregation of insulated conductors may be accomplished by clamping, routing, or an equivalent means which provides permanent separation from insulated or uninsulated live parts of a different circuit.

13.4.3 Field-installed conductors of any circuit shall be segregated by barriers from:

a) Field-installation and factory-installed conductors connected to any other circuit, unless the conductors of both circuits are insulated for the maximum voltage of either circuit; and

b) Uninsulated live parts of any other circuit of the appliance, and from any uninsulated live parts whose short-circuiting would result in risk of fire or electric shock, except that:

1) A construction in which field-installed conductors may make contact with wiring terminals is acceptable provided that Type T, TF, or equivalent conductors are installed; and

2) A construction in which field-installed conductors that do or may have insulation less than the types of wire mentioned in (1) may make contact with low-voltage wiring terminals (see 5.3) is acceptable, provided that the short-circuiting of such terminals does not result in risk of fire or electric shock.

Documents
Document Sharing Hub
Full document details: UL 1026 2009

13.4.4 With respect to 13.4.3(a), if the intended uses of an appliance are such that in some applications a barrier is required, a removable barrier or one having openings for the passage of conductors may be employed, provided instructions for the use of the barrier are a permanent part of the appliance, and complete instructions in conjunction with a wiring diagram may be acceptable instead of a barrier if, upon investigation, the combination is found to provide the required separation.

13.4.5 Segregation of field-installation conductors from other field-installation conductors and from uninsulated live parts of an appliance connected to different circuits may be accomplished by arranging the location of the openings in the enclosure for the various conductors (with respect to the terminals or other uninsulated live parts) so that there is no likelihood of the intermingling of the conductors or parts of different circuits. If the number of openings in the enclosure does not exceed the minimum required for the proper wiring of the appliance, and if each opening is located opposite a set of terminals, it is to be assumed (for the purpose of determining whether the appliance complies with the requirement in 13.4.3) that the conductors entering each opening will be connected to the terminals opposite the opening. If more than the minimum number of openings are provided, the possibility of conductors entering at points other than opposite the terminals to which they are intended to be connected and contacting insulated conductors or uninsulated current-carrying parts connected to a different circuit is to be investigated. To determine whether the appliance complies with the requirement in 13.4.3, it is to be wired as it would be in service, and in doing so, a reasonable amount of slack is to be left in each conductor, within the enclosure, and no more than average care is to be exercised in stowing this slack in the wiring compartment.

13.4.6 If a barrier is used to provide separation between the wiring of different circuits, it shall:

a) Be of metal or of insulating material;

b) Be reliably held in place; and

c) Be of a mechanical strength to withstand any anticipated mechanical exposure.

Unclosed openings in a barrier for the passage of conductors shall not be larger in diameter than 1/4 inch (6.4 mm) and shall not exceed in number, on the basis of one opening per conductor, the number of wires which will need to pass through the barrier. The closure for any other opening shall present a smooth surface wherever an insulated wire may be in contact with it, and the area of any such opening, with the closure removed, shall not be larger than required for the passage of the necessary wires.

13.4.7 A metal barrier shall have a thickness at least as great as the minimum acceptable thickness of the enclosure metal. A barrier of insulating material shall not be less than 0.028 inch (0.71 mm) thick, and shall be of greater thickness if its deformation may be readily accomplished so as to defeat its purpose.

Documents
Document Sharing Hub
Full document details: UL 1026 2009