UL 1037

STANDARD FOR SAFETY

Antitheft Alarms and Devices

Documents
Document Sharing Hub

Full document details: UL 1037 2017

Documents
Document Sharing Hub

Full document details: UL 1037 2017

UL Standard for Safety for Antitheft Alarms and Devices, UL 1037

Sixth Edition, Dated September 9, 2016

Summary of Topics

Revisions are being issued for ANSI/UL 1037 to clarify requirements for Residential Security Containers.

The new/revised requirements are substantially in accordance with Proposal(s) on this subject dated May 19, 2017.

Text that has been changed in any manner or impacted by UL's electronic publishing system is marked with a vertical line in the margin.

All rights reserved. No part of this publication may be reproduced, stored in a retrieval system, or transmitted in any form by any means, electronic, mechanical photocopying, recording, or otherwise without prior permission of UL.

UL provides this Standard ″as is″ without warranty of any kind, either expressed or implied, including but not limited to, the implied warranties of merchantability or fitness for any purpose.

In no event will UL be liable for any special, incidental, consequential, indirect or similar damages, including loss of profits, lost savings, loss of data, or any other damages arising out of the use of or the inability to use this Standard, even if UL or an authorized UL representative has been advised of the possibility of such damage. In no event shall UL's liability for any damage ever exceed the price paid for this Standard, regardless of the form of the claim.

Users of the electronic versions of UL's Standards for Safety agree to defend, indemnify, and hold UL harmless from and against any loss, expense, liability, damage, claim, or judgment (including reasonable attorney's fees) resulting from any error or deviation introduced while purchaser is storing an electronic Standard on the purchaser's computer system.

Documents
Document Sharing Hub

Full document details: UL 1037 2017

No Text on This Page

Documents
Document Sharing Hub

Full document details: UL 1037 2017

SEPTEMBER 9, 2016
(Title Page Reprinted: September 15, 2017)

ANSI/UL 1037-2017

1

UL 1037

Standard for Antitheft Alarms and Devices

First Edition – July, 1974
Second Edition – June, 1981
Third Edition – December, 1988
Fourth Edition – July, 1994
Fifth Edition – February, 1999

Sixth Edition

September 9, 2016

This ANSI/UL Standard for Safety consists of the Sixth Edition including revisions through September 15, 2017.

The most recent designation of ANSI/UL 1037 as an American National Standard (ANSI) occurred on September 15, 2017. ANSI approval for a standard does not include the Cover Page, Transmittal Pages and Title Page.

Comments or proposals for revisions on any part of the Standard may be submitted to UL at any time. Proposals should be submitted via a Proposal Request in UL's On-Line Collaborative Standards Development System (CSDS) at https://csds.ul.com.

UL's Standards for Safety are copyrighted by UL. Neither a printed nor electronic copy of a Standard should be altered in any way. All of UL's Standards and all copyrights, ownerships, and rights regarding those Standards shall remain the sole and exclusive property of UL.

COPYRIGHT © 2017 UNDERWRITERS LABORATORIES INC.

Documents
Document Sharing Hub

Full document details: UL 1037 2017

No Text on This Page

Documents
Document Sharing Hub

Full document details: UL 1037 2017

CONTENTS

INTRODUCTION

1 Scope 7
2 General 7
2.1 Components 7
2.2 Units of measurement 8
2.3 Undated references 8
2.4 Terminology 8
3 Glossary 8
4 Installation and Operating Instructions 9

CONSTRUCTION – ALL PRODUCTS

ASSEMBLY

5 General 10
5.1 Product assembly 10
5.2 Electrical protection 10
6 Protection of Service Personnel 15
7 Enclosures 15
7.1 General 15
7.2 Doors and covers 17
7.3 Enclosure openings 17
7.4 Screens and expanded metal 19
7.5 Cast metal 19
7.6 Sheet metal 20
7.7 Product enclosure mounting 23
7.8 Polymeric materials 23
8 Electric Shock 23
9 Corrosion Protection 24

FIELD WIRING CONNECTIONS

10 General 24
11 Cord Connected Products 25
12 Permanently Connected Products 26
12.1 General 26
12.2 Field wiring terminals 27
12.3 Field wiring leads 29
12.4 Polarity identification 30
13 Grounding 30

INTERNAL WIRING

14 General 31
15 Wiring Methods 32
16 Separation of Circuits 33
17 Bonding for Grounding 34

Documents
Document Sharing Hub
Full document details: UL 1037 2017

COMPONENTS, ELECTRICAL

18 General 37
18.1 Mounting of components 37
18.2 Insulating materials 38
18.3 Fuseholders 39
18.4 Current-carrying parts 39
18.5 Power on indicator 39
19 Overcurrent Protection 39
20 Semiconductors 39
21 Switches 39
22 Transformers and Coils 40

SPACINGS

23 General 40
24 Components 43

PERFORMANCE – ALL PRODUCTS

25 General 43
25.1 Test units and data 43
25.2 Test samples and miscellaneous data 44
25.3 Test voltages 44
26 Normal Operation Test 44
27 Input Test 45
28 Output Measurement Test 45
29 Power-Limited Circuits 46
29.1 General 46
29.2 Maximum voltage 48
29.3 Maximum current 48
29.4 VA_{max} (Not inherently limited circuits only) 49
30 Electrical Supervision Test 49
31 Undervoltage Operation Test 49
32 Overvoltage Operation Test 50
33 Variable Ambient Test 50
34 Humidity Test 50
35 Electric Shock Current Test 50
36 Leakage Current Tests for Cord-Connected Products 54
37 Overload Test 57
37.1 General 57
37.2 Separately energized circuits 57
38 Endurance Test 58
38.1 General 58
38.2 Separately energized circuits 58
39 Jarring Test 58
40 Road Shock and Vibration Tests 59
41 Dielectric Voltage-Withstand Test 60
42 Temperature Test 61
43 Abnormal Operation Test 64
44 Electrical Transient Tests 65
44.1 General 65
44.2 Supply line transients 65

Documents
Document Sharing Hub
Full document details: UL 1037 2017

44.3 Internally induced transients 65
44.4 Input/output circuit transients 66
45 AC Induction Test 67
46 Polymeric Materials Test 68
47 Battery Replacement Test 68
48 Drop Test 68
49 Strain Relief Test 68
49.1 Supply cord 68
49.2 Field-wiring leads 69
50 Ignition Through Bottom-Panel Openings Tests 69
50.1 General 69
50.2 Hot, flaming oil 69
51 Mechanical Strength Tests for Enclosures 70
52 Special Terminal Assemblies Tests 70
52.1 General 70
52.2 Disconnection and reconnection 71
52.3 Mechanical secureness 71
52.4 Flexing test 71
52.5 Millivolt drop test 71
52.6 Temperature test 72
53 Attack Test 72
54 Residential Security Container 72
54.1 Locks 72
54.2 Attack test – Attack level I 73
54.3 Attack test – Attack level II 74
54.4 Attack test – Attack level III 74

MANUFACTURING AND PRODUCTION TESTS – ALL HIGH-VOLTAGE PRODUCTS

55 General 75
56 Production Line Dielectric Voltage-Withstand Test 75
57 Production Line Grounding Continuity Test for High-Voltage, Cord-Connected Products 76

MARKINGS – ALL PRODUCTS

58 Details 76
59 Marking Permanency Tests 79

OUTDOOR USE EQUIPMENT

ASSEMBLY

60 General 79
61 Construction 79
61.1 General 79
61.2 Corrosion protection 80
62 Field-Wiring Connections 82
63 Internal Wiring 82
64 Components, Electrical Insulating Material 84

Documents
Document Sharing Hub
Full document details: UL 1037 2017

PERFORMANCE

65 Rain Test 84
66 Dust Test 87
67 Variable Ambient Test 87
68 Metallic Coating Thickness Test 87
69 Corrosion Tests 89
69.1 General 89
69.2 Salt spray (fog) 89
69.3 Moist hydrogen sulfide (H_2S) – air mixture 90
69.4 Moist carbon dioxide (CO_2)-sulfur dioxide (SO_2)-air mixture 90
70 Ultraviolet Light and Water Exposure Test 90
71 Accelerated Aging Tests For Gaskets, Sealing Compounds, and Adhesives 91

MARKINGS

72 Details 92

ACCESSORY EQUIPMENT

73 General 93
74 Construction 93
75 Performance (Installation) Test 94
76 Markings 94

APPENDIX A

Standards for Components A1

Documents
Document Sharing Hub

Full document details: UL 1037 2017

INTRODUCTION

1 Scope

1.1 These requirements apply to the construction, performance, and operation of equipment intended to provide antitheft protection.

1.2 An antitheft alarm is intended to give both audible and visible signals or only an audible signal if theft of protected property is attempted.

1.3 An antitheft device is intended to protect property by significantly limiting the mobility or portability of the property.

1.4 Equipment intended to provide a degree of fire resistance is additionally covered under the requirements of the Standard for Tests for Fire Resistance of Record Protection Equipment, UL 72.

2 General

2.1 Components

2.1.1 Except as indicated in 2.1.2, a component of a product covered by this standard shall comply with the requirements for that component. See Appendix A for a list of standards covering components generally used in the products covered by this standard.

2.1.2 A component is not required to comply with a specific requirement that:

a) Involves a feature or characteristic not required in the application of the component in the product covered by this standard, or

b) Is superseded by a requirement in this standard.

2.1.3 A component shall be used in accordance with its rating established for the intended conditions of use.

2.1.4 Specific components are incomplete in construction features or restricted in performance capabilities. Such components are intended for use only under limited conditions, such as certain temperatures not exceeding specified limits, and shall be used only under those specific conditions.

Documents
Document Sharing Hub

Full document details: UL 1037 2017

2.2 Units of measurement

2.2.1 Values stated without parentheses are the requirement. Values in parentheses are explanatory or approximate information.

2.2.2 Unless otherwise indicated, all voltage and current values mentioned in this standard are root-mean-square (rms).

2.3 Undated references

2.3.1 Any undated reference to a code or standard appearing in the requirements of this standard shall be interpreted as referring to the latest edition of that code or standard.

2.4 Terminology

2.4.1 The term ″product″ as used in this standard refers to all types of antitheft alarms and devices.

3 Glossary

3.1 For the purpose of this standard the following definitions apply.

3.2 CIRCUITS, ELECTRICAL –

a) High-Voltage (Class 1) – A circuit involving a potential of not more than 600 volts and having circuit characteristics in excess of those of a low-voltage power-limited circuit.

b) Low-Voltage – A circuit involving a potential of not more than 30 volts alternating current (AC) rms, [42.4 volts peak or direct current (DC)].

c) Power Limited – A circuit whose output is limited as specified in Power-Limited Circuits, Section 29.

d) Class 2 – A circuit in which the voltage and power limitations are in accordance with the requirements of Table 29.1 for AC circuits and Table 29.2 for DC circuits.

e) Class 3 – A circuit in which the voltage and power limitations are in accordance with the requirements of Table 29.1 for AC circuits and Table 29.2 for DC circuits.

3.3 CORD-CONNECTED UNIT – A unit intended for connection to the power source by means of a supply cord. Such a unit is intended to be moved for reasons of interchange or realignment of the units of a system.

3.4 LINE VOLTAGE – The voltage at any field connected source of supply, nominally 50 – 60 hertz (Hz), and either 115, 208, or 230 volts.

3.5 NORMAL STANDBY CONDITION – The ready-to-operate condition of the product existing prior to its being tripped or operated by theft attempt.

Documents
Document Sharing Hub
Full document details: UL 1037 2017

3.6 PERMANENT SECURITY CONTAINER – A security container that weighs more than 750 pounds or is to be fixed to a surface that is not intended to be moved.

3.7 PORTABLE SECURITY CONTAINER – A security container that weighs less than 750 pounds.

3.8 PRIMARY BATTERY – A battery that by construction is not intended to be recharged.

3.9 RESIDENTIAL SECURITY CONTAINER – A container intended to be used in a residence to provide moderate protection to items (such as guns, jewelry and other valuables) against burglary or theft.

3.10 SAFETY CIRCUIT – Any primary or secondary circuit that is relied upon to reduce the risk of fire, electric shock, or unintentional contact with moving parts that may cause injury to persons (for example, an interlock circuit).

3.11 SECONDARY BATTERY – A battery that by construction is intended to be recharged.

4 Installation and Operating Instructions

4.1 A copy of:

a) The installation and operating instructions intended to accompany each product or component as produced,

b) The related schematic wiring diagrams, and

c) The installation drawings

is to be furnished with the sample submitted for investigation to be used as a guide in the examination and test of the product or component. For this purpose, a final printed edition is not required.

4.2 The instructions and drawings shall include at least the following:

a) Typical installation drawing layouts and complete representative installation wiring diagrams for the product indicating recommended locations and wiring methods that shall be in accordance with the National Electrical Code, ANSI/NFPA 70. Locations where installations are not recommended shall also be included.

b) Concise description of the operation, testing, and maintenance procedures for the product(s), and recommended testing frequency (that shall be at least once a year).

c) Identification of replacement parts, such as lamps or batteries, by a part number, manufacturer's model number, or other means that have been determined to be equivalent.

d) A description of the conditions that might be expected to result in false alarms or impaired operation of the product.

e) A description of any features provided to reduce the risk of fire, electric shock, or injury to persons and a warning against bypassing such features.

Documents
Document Sharing Hub
Full document details: UL 1037 2017

4.3 The instructions may be incorporated on the inside of the product, on a separate sheet, or as part of a manual. If not included directly on the product, the instructions or manual shall be referenced in the marking information on the product. See Markings – All Products, Details, Section 58.

CONSTRUCTION – ALL PRODUCTS

ASSEMBLY

5 General

5.1 Product assembly

5.1.1 The product shall be factory-built as a complete assembly and shall include all the components necessary for its intended function when installed (used) as intended. The product may be shipped from the factory as two or more major subassemblies. See 5.1.2.

5.1.2 A product that is not assembled by the manufacturer as a complete unit shall be arranged in major subassemblies. Each subassembly shall be capable of being incorporated into a complete assembly without requiring alteration, cutting, drilling, threading, welding, or similar tasks by the installer (user). Two or more subassemblies, which must bear a definite relationship to each other for the intended installation or operation of the product, shall be arranged and constructed to permit them to be incorporated into the complete assembly only in the correct relationship with each other without need for alteration or alignment, or such subassemblies shall be assembled, tested, and shipped from the factory as one element.

5.2 Electrical protection

5.2.1 Louvers and other openings in the enclosure shall be constructed and located to reduce the risk of unintentional contact with uninsulated high-voltage live parts. In determining compliance with this requirement parts, such as covers, panels, and grilles, used as part of the enclosure are to be removed unless tools are required for their removal or an interlock is provided. See also Protection of Service Personnel, Section 6.

5.2.2 Uninsulated high-voltage live parts shall be located, guarded or enclosed as indicated in 5.2.3 – 5.2.5.

5.2.3 Openings directly over uninsulated high-voltage live parts shall not exceed 0.187 inch (4.75 mm) in any dimension or shall be of a configuration as illustrated by Figure 5.1 for top cover designs and Figure 5.2 for side openings, has been determined to be equivalent.

Documents
Document Sharing Hub
Full document details: UL 1037 2017

Figure 5.1
Cross sections of top cover designs

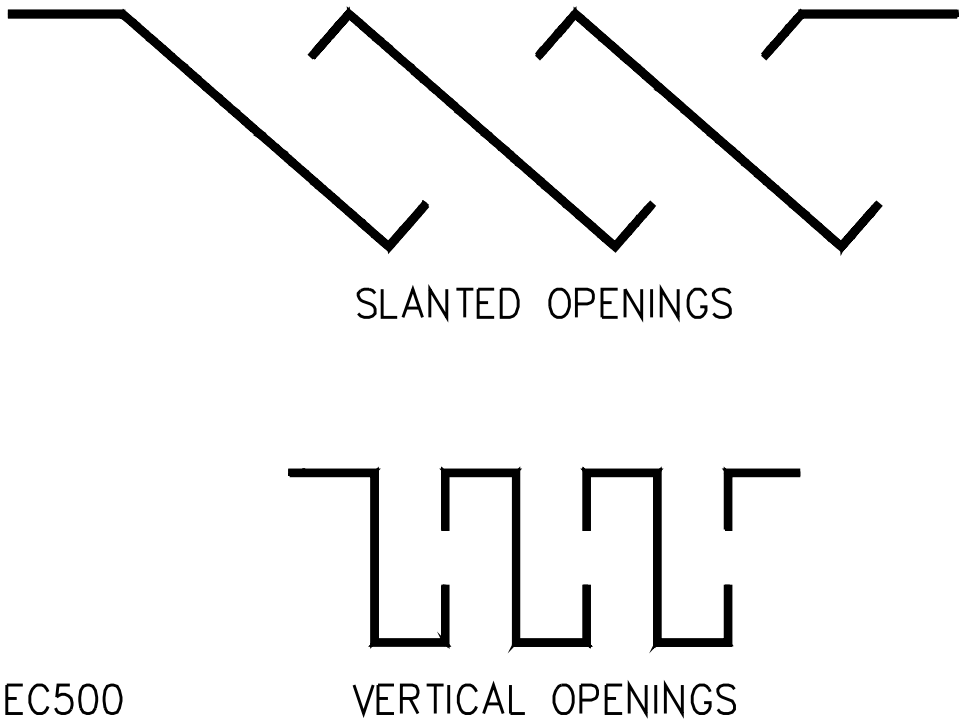

Figure 5.2
Louvers

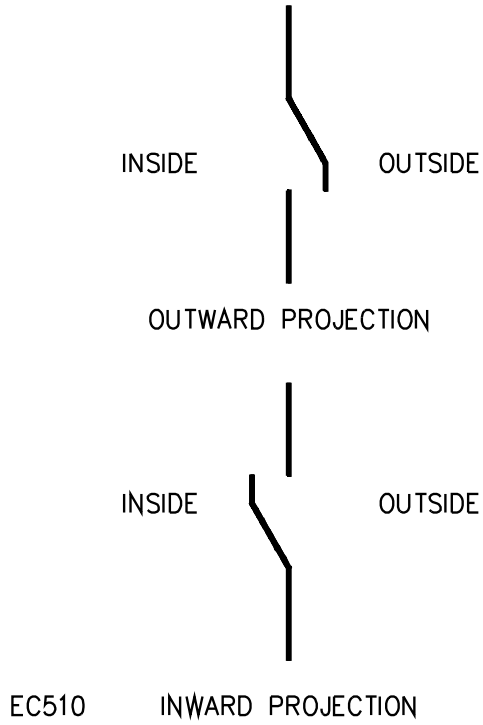

Documents
Document Sharing Hub
Full document details: UL 1037 2017

5.2.4 If an opening in an electrical enclosure does not permit entrance of a 1 inch (25.4 mm) diameter rod, the opening shall be sized and arranged so that a probe, as illustrated in Figure 5.3, cannot be made to contact any uninsulated live part (other than low-voltage) when inserted through the opening in a straight or articulated position.

5.2.5 An opening that permits entrance of a 1 inch (25.4 mm) diameter rod may be used under the conditions described and illustrated in Figure 5.4.

Documents
Document Sharing Hub

Full document details: UL 1037 2017

Figure 5.3
Articulated probe

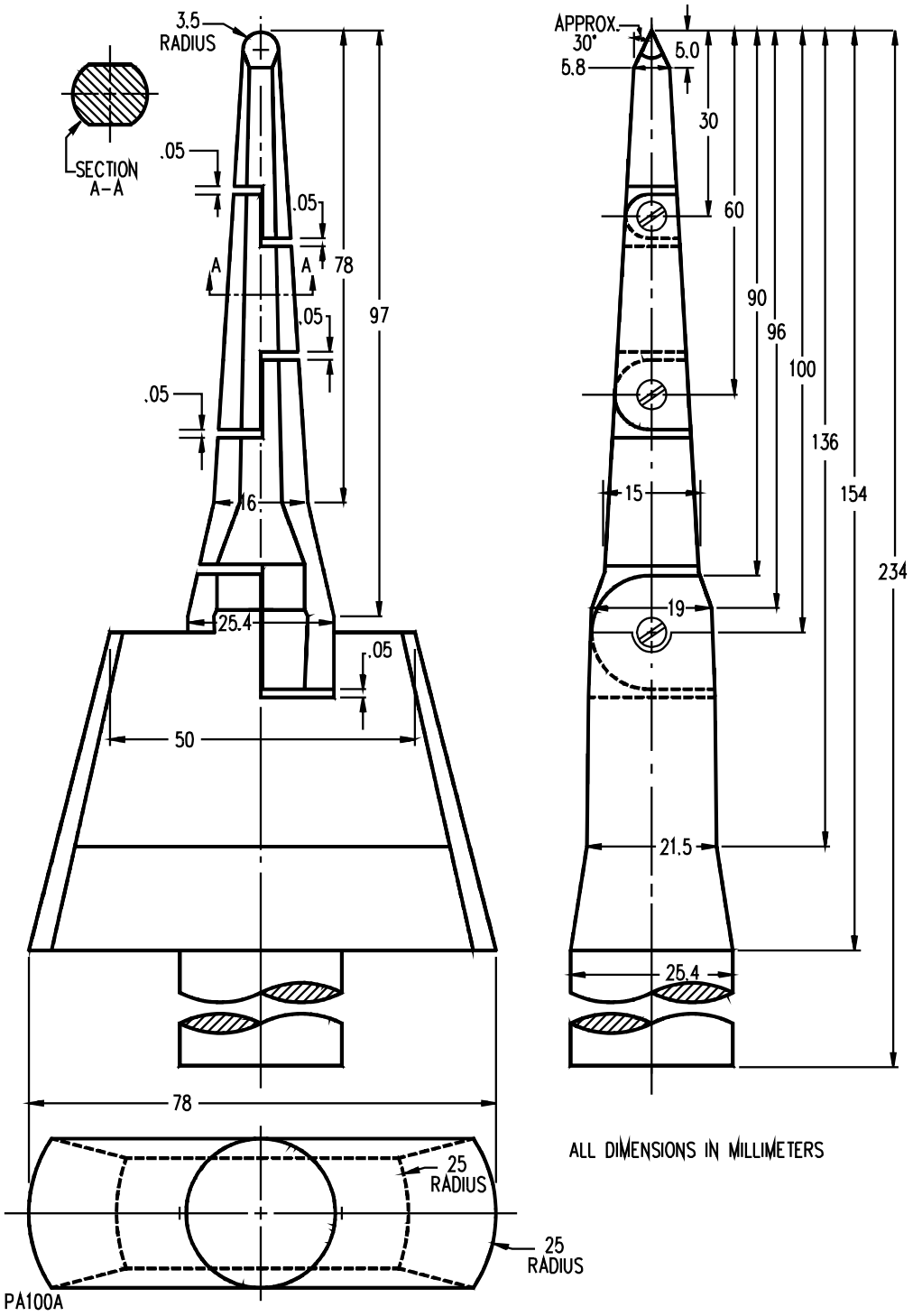

NOTE – Available from Underwriters Laboratories Inc.

Documents
Document Sharing Hub
Full document details: UL 1037 2017

Figure 5.4
Opening in enclosure

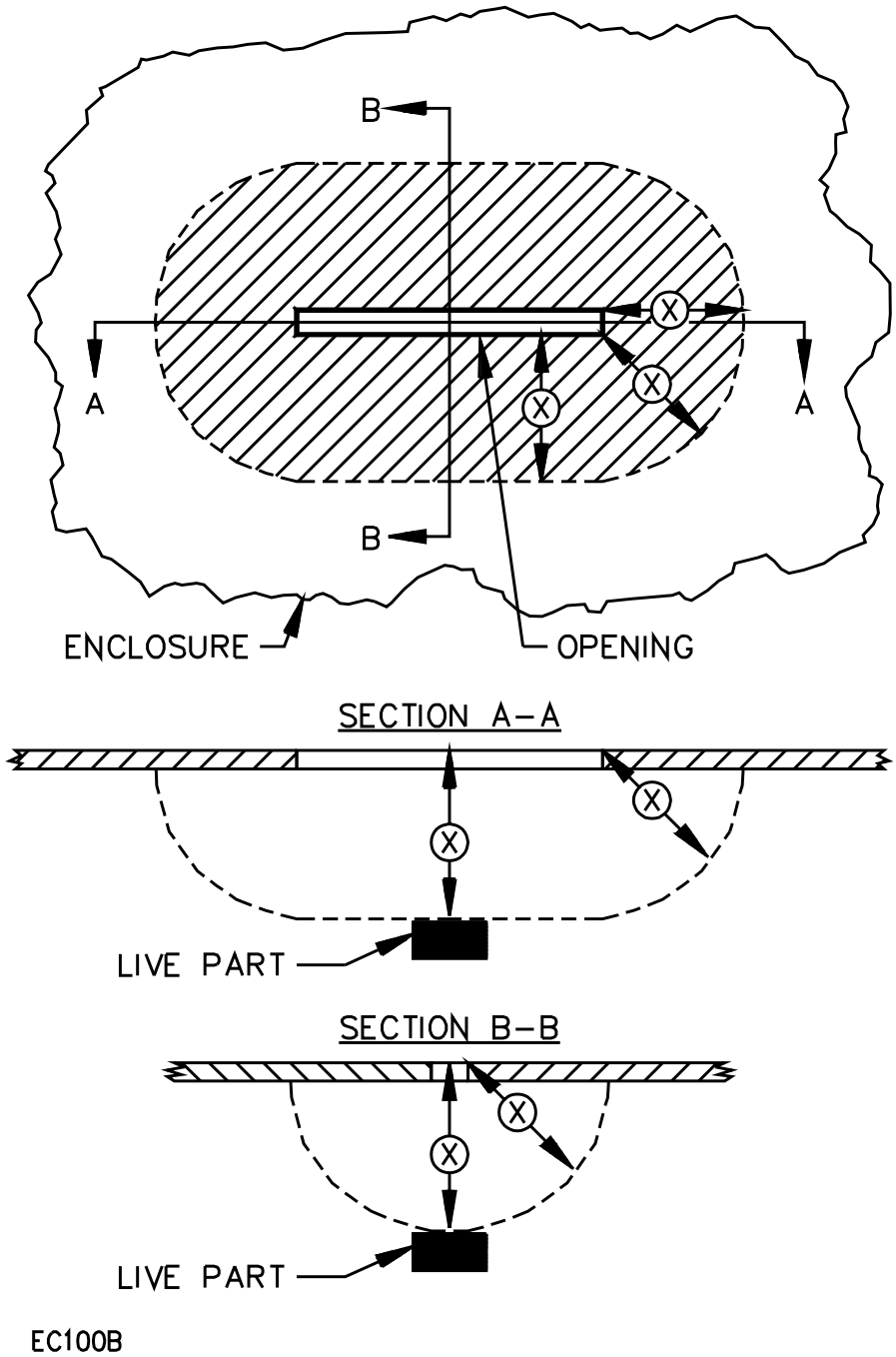

NOTE – The opening may be used if, within the enclosure, there is no uninsulated live part or film-coated wire less than X inches (mm) from the perimeter of the opening, as well as within the volume generated by projecting the perimeter X inches (mm) normal to its plane. X equals five times the diameter of the largest diameter rod which can be inserted through the opening, but not less than 6-1/16 inch (154 mm).

Documents
Document Sharing Hub
Full document details: UL 1037 2017

6 Protection of Service Personnel

6.1 An uninsulated live part of a high-voltage circuit within the enclosure shall be located, guarded, or enclosed so as to reduce the risk of accidental contact by persons performing service functions that may have to be performed while the equipment is energized.

6.2 If during the examination of a product in connection with the requirements in 6.1, a part of the outer enclosure may be removed without the use of tools, or part of the outer enclosure may be removed by the user to allow access for making routine operating adjustments, it is not be assumed that the removable part reduces the risk of electric shock while installed.

6.3 An electrical component that may require examination, replacement, adjustment, servicing, or maintenance while the product is energized shall be located and mounted with respect to other components and with regard to grounded metal so that:

a) The component is accessible for such service and

b) The risk of electric shock to the service person from adjacent uninsulated high-voltage live parts is reduced.

6.4 The following are not considered to be uninsulated live parts:

a) Coils of relays and solenoids, and transformer windings, if the coils and windings are provided with insulating overwraps rated for the potentials encountered;

b) Terminals and splices with insulation rated for the potentials encountered; and

c) Insulated wire.

7 Enclosures

7.1 General

7.1.1 The enclosure of a product shall have the strength and rigidity to resist total or partial collapse and the attendant reduction of spacings, loosening or displacement of parts, or other defects. See the Mechanical Strength Tests for Enclosures, Section 51.

7.1.2 Operating parts, such as gear mechanisms, light-duty relays, and similar devices, shall be enclosed to protect against malfunction due to dust or other material which may impair their intended operation.

7.1.3 An enclosure containing other than power limited circuits shall be constructed to reduce the risk of emission of flame, molten metal, flaming or glowing particles, or flaming drops. See the Ignition Through Bottom-Panel Openings Tests, Section 50.

7.1.4 To comply with the requirement in 7.1.3, the product shall either be provided with a nonflammable bottom in accordance with the requirements in 7.3.2 or a protective barrier as illustrated in Figure 7.1 under all areas containing combustible materials.

Exception: The bottom enclosures may be constructed as described in 7.3.3.

Documents
Document Sharing Hub

Full document details: UL 1037 2017

Figure 7.1
Protective pan

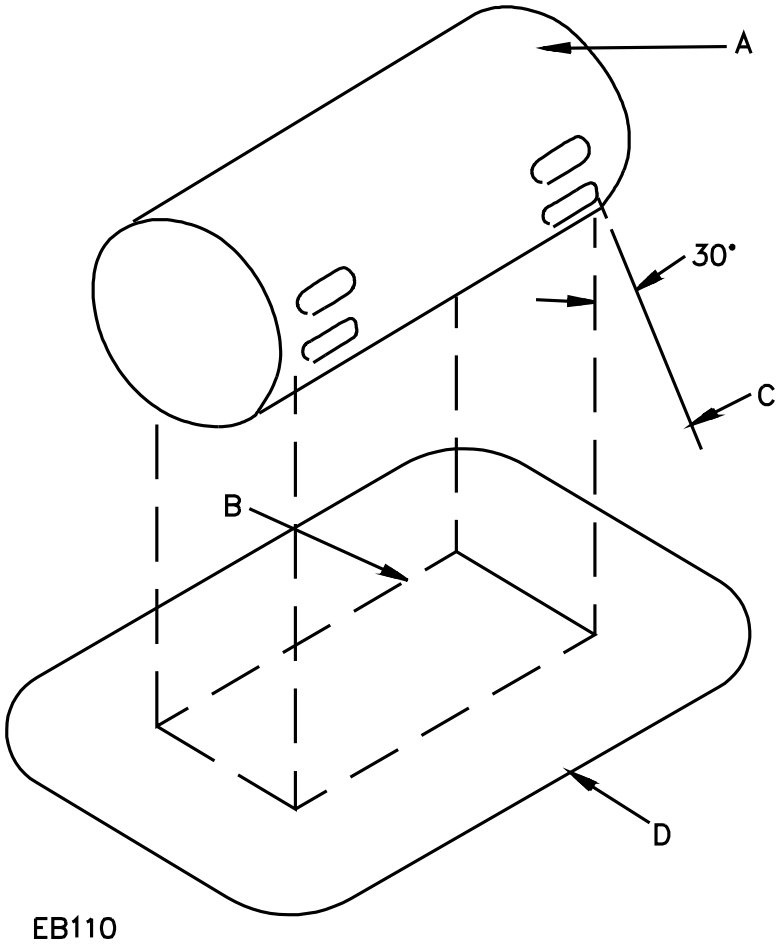

A – The entire component under which a barrier (flat or dished with or without a lip or other raised edge) of nonflammable material is to be provided. The sketch above is of a metal enclosed component with ventilating openings to show that the protective barrier is required only for those openings from which flaming parts might come. If the component or assembly does not have its own nonflammable enclosure, the area to be protected would be the entire area occupied by the component or assembly.

B – Projection of the outline of the area of (A) which needs a bottom barrier vertically downward onto the horizontal plane of the lowest point on the outer edge (D) of the barrier.

C – Inclined line that traces out an area (D) on the horizontal plane of the barrier. Moving around the perimeter of the area (B) which needs a bottom barrier, this line projects at a 30-degree angle from the line extending vertically at every point around the perimeter of (A) and oriented to trace out the largest area, except that the angle may be less than 30 degrees if the barrier or portion of the bottom cover contacts a vertical barrier or side panel of nonflammable material, or if the horizontal extension of the barrier (B) to (D) would exceed 6 inches (150 mm).

D – Minimum outline of the barrier, except that the extension (B) – (D) need not exceed 6 inches (150 mm) (flat or dished with or without lip or other raised edge). The bottom of the barrier may be flat or formed in any manner provided that every point of area (D) is at or below the lowest point on the outer edge of the barrier.

Documents
Document Sharing Hub
Full document details: UL 1037 2017

7.1.5 A construction using individual barriers under components, groups of components or assemblies, as illustrated in Figure 7.1 is considered to comply with the requirement in 7.1.3.

7.2 Doors and covers

7.2.1 An enclosure cover shall be hinged, sliding, or similarly attached so it cannot be removed if:

a) It gives access to fuses or any other overcurrent protective device, the intended functioning of which requires renewal or

b) It is necessary to open the cover in connection with the intended operation of the unit.

Exception: If its position is supervised by a tamper contact that is connected in the closed protective circuit, an enclosure cover need not comply with the requirements of this paragraph. See also 29.4.

7.2.2 Fasteners requiring the use of a tool or key shall be used for the assembly of all enclosures if access is not required for operation of the product.

7.3 Enclosure openings

7.3.1 Openings in the enclosure shall be so constructed and of such size that direct entry of foreign objects is prevented. See also 5.2.3. See Figure 5.1 for examples of top cover constructions that are considered to prevent direct entry. See also Figure 5.2 for side opening constructions.

7.3.2 Openings may be provided in the bottom panels or protective pans under areas containing material not classified as V-1, in accordance with the requirements for the Standard for Tests for Flammability of Plastic Material for Use in Devices and Appliances, UL 94, if constructed in a manner that prevents materials from falling directly from the interior of the product onto the supporting surface or onto any other location under the product. Figure 7.2 illustrates a type of baffle that complies to this requirement. A second construction that complies to this requirement is a 0.040-inch (1.02-mm) sheet-steel bottom panel in which round holes of 5/64-inch (2.0-mm) maximum diameter, are spaced not closer together than 1/8 inch (3.2 mm) center-to-center. Constructions other than these two may be used if they comply with the Ignition Through Bottom-Panel Openings Tests, Section 49.

Documents
Document Sharing Hub
Full document details: UL 1037 2017

Figure 7.2
Bottom panel baffles

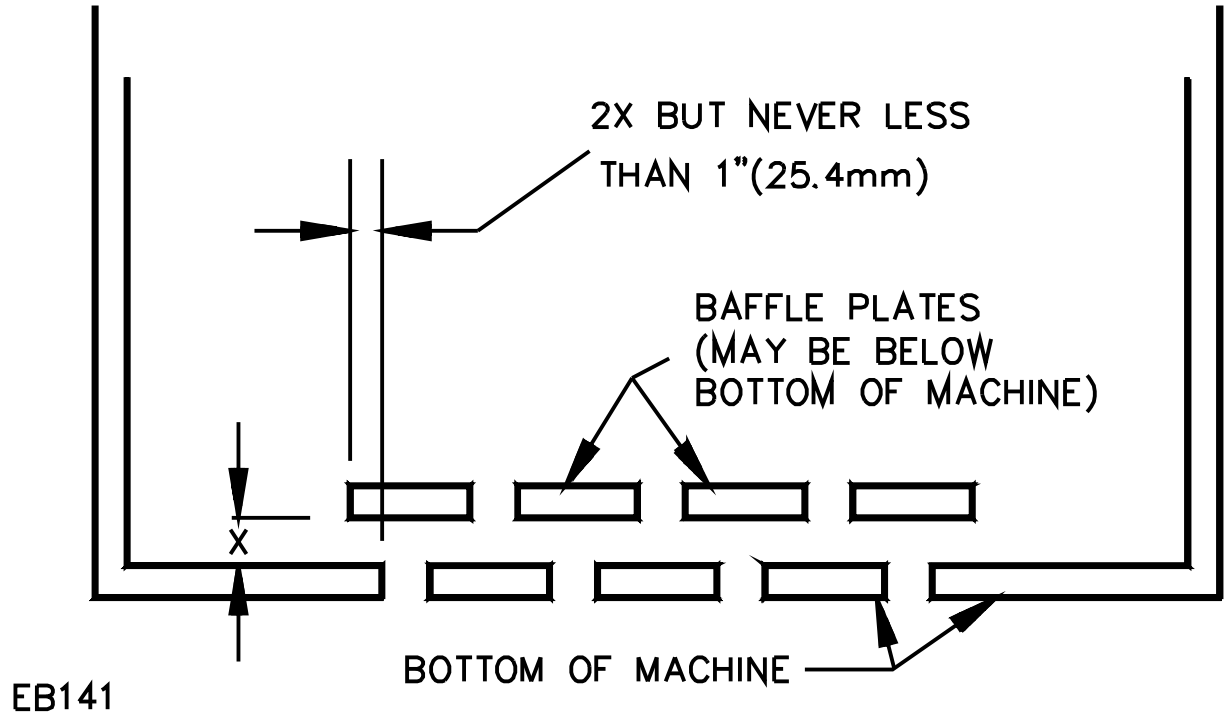

7.3.3 The bottom of the enclosure under areas containing only materials classified as V-1 or less flammable, may have openings not larger than 1/16 square inch (40.3 mm^2).

7.3.4 Openings may be used, without limitation of the size or number of openings, in areas containing only PVC, TFE, CTFE, FEP, and neoprene insulated wire or cable; in areas containing plugs and receptacles; and in areas underneath impedance protected or thermally protected motors.

7.3.5 Openings in the enclosure shall not give access to any relays, terminals, controls, or related components that might be subject to tampering by hand or with tools without causing an alarm or trouble signal.

Documents
Document Sharing Hub
Full document details: UL 1037 2017

7.4 Screens and expanded metal

7.4.1 Screens or expanded metal used as a guard, enclosure or part of an enclosure, shall comply with the requirements in 7.4.2 and 7.4.4 and with the Mechanical Strength Tests for Enclosures, Section 51.

7.4.2 Except as indicated in 7.4.3, perforated sheet steel and sheet steel used for expanded metal mesh shall not be less than 0.042 inch (1.07 mm) thick [0.045 inch (1.17 mm) if zinc coated] if the mesh openings or perforations are 1/2 square inch (323 mm^2) or less in area, and shall not be less than 0.080 inch (2.03 mm) thick [0.084 inch (2.13 mm) if zinc coated] for larger openings. The largest dimension of this material shall not exceed 4 inches (102 mm).

7.4.3 If the indentation of a guard or the enclosure will not alter the clearance between uninsulated live parts and grounded metal so as to impair performance or reduce spacings below the minimum required values, see Spacings, General, Section 23, 0.020 inch (0.53 mm) expanded steel mesh or perforated sheet steel [0.023 inch (0.58 mm) if zinc coated] may be used, if:

a) The exposed mesh on any side or surface of the product so protected has an area of not more than 72 square inches (464 cm^2) and has no dimension greater than 12 inches (305 mm) or

b) The width of the opening covered by this material is not greater than 3-1/2 inches (89 mm).

7.4.4 The wires of a screen shall not be less than 16 AWG (1.3 mm^2) steel if the screen openings are 1/2 square inch (323 mm^2) or less in area, and shall not be less than 12 AWG (3.3 mm^2) steel for larger screen openings.

7.5 Cast metal

7.5.1 The minimum thickness of cast metal for an enclosure shall be as indicated in Table 7.1.

Exception: Cast metal of lesser thickness may be used, if consideration being given to the shape, size, and function of the enclosure, it provides mechanical strength that has been determined to be equivalent; see the Drop Test, Section 48, and the Mechanical Strength Tests for Enclosures, Section 51.

Table 7.1
Cast-metal enclosures

Use, or dimensions of area involved[a]	Minimum thickness			
	Die-cast metal,		Cast metal of other than the die-cast type,	
	inch	(mm)	inch	(mm)
Area of 24 square inches (155 cm^2) or less and having no dimension greater than 6 inches (152 mm)	1/16	(1.6)	1/8	(3.2)
Area greater than 24 square inches (155 cm^2) or having any dimension greater than 6 inches (152 mm)	3/32	(2.4)	1/8	(3.2)
At a threaded conduit hole	1/4	(6.4)	1/4	(6.4)
At an unthreaded conduit hole	1/8	(3.2)	1/8	(3.2)

[a] The area limitation for metal 1/16 inch (1.6 mm) thick may be obtained by the provision of reinforcing ribs subdividing a larger area.

Documents
Document Sharing Hub
Full document details: UL 1037 2017

7.5.2 If threads for the connection of conduit are tapped through a hole in an enclosure wall, or if a construction that has been determined to be equivalent is used, there shall not be less than 3-1/2 nor more than 5 threads in the metal, and the construction shall be such that a standard conduit bushing can be attached as intended.

7.5.3 If threads for the connection of conduit are tapped only part of the way through a hole in an enclosure wall, there shall not be less than 3-1/2 full threads in the metal, and there shall be a smooth, rounded inlet hole for the conductors which shall afford protection to the conductors that has been determined to be equivalent to that provided by a standard conduit bushing.

7.6 Sheet metal

7.6.1 The thickness of sheet metal for an enclosure shall not be less than that indicated in Table 7.2 or 7.3, whichever applies.

Exception: Sheet metal of lesser thickness may be used, if consideration being given to the shape, size, and function of the enclosure, it provides mechanical strength that has been determined to be equivalent; see the Drop Test, Section 48, and the Mechanical Strength Test for Enclosures, Section 51.

Table 7.2
Minimum thickness of sheet metal for electrical enclosures carbon steel or stainless steel

Without supporting frame[a]		With supporting frame or equivalent reinforcing[a]		Minimum thickness uncoated,		Minimum thickness metal coated,	
Maximum width,[b] inches	Maximum length,[c] inches	Maximum Width,[b] inches	Maximum length, inches	inch [MSG]	(mm)	inch [GSG]	(mm)
4.0 (10.2)	Not limited	6.25 (15.9)	Not limited	0.020	(0.51)	0.023	(0.58)
4.75 (12.1)	5.75 (14.6)	6.75 (17.1)	8.25 (21.0)	[24]		[24]	
6.0 (15.2)	Not limited	9.5 (24.1)	Not limited	0.026	(0.66)	0.029	(0.74)
7.0 (17.8)	8.75 (22.2)	10.0 (25.4)	12.5 (31.8)	[22]		[22]	
8.0 (20.3)	Not limited	12.0 (30.5)	Not limited	0.032	(0.81)	0.034	(0.86)
9.0 (22.9)	11.5 (29.2)	13.0 (33.0)	16.0 (40.6)	[20]		[20]	
12.5 (31.8)	Not limited	19.5 (49.5)	Not limited	0.042	(1.07)	0.045	(1.14)
14.0 (35.6)	18.0 (45.7)	21.0 (53.3)	25.0 (63.5)	[18]		[18]	
18.0 (45.7)	Not limited	27.0 (68.6)	Not limited	0.053	(1.35)	0.056	(1.42)
20.0 (50.8)	25.0 (63.5)	29.0 (73.7)	36.0 (91.4)	[16]		[16]	
22.0 55.9)	Not limited	33.0 (83.8)	Not limited	0.060	(1.52)	0.063	(1.60)
25.0 (63.5)	31.0 (78.7)	35.0 (88.9)	43.0 (109.2)	[15]		[15]	
25.0 (63.5)	Not limited	39.0 (99.1)	Not limited	0.067	(1.70)	0.070	(1.78)
29.0 (73.7)	36.0 (91.4)	41.0 (104.1)	51.0 (129.5)	[14]		[14]	
33.0 (83.8)	Not limited	51.0 (129.5)	Not limited	0.080	(2.03)	0.084	(2.13)
38.0 (96.5)	47.0 (119.4)	54.0 (137.2)	66.0 (167.6)	[13]		[13]	
42.0 (106.7)	Not limited	64.0 (162.6)	Not limited	0.093	(2.36)	0.097	(2.46)
47.0 (119.4)	59.0 (149.9)	68.0 (172.7)	84.0 (213.4)	[12]		[12]	
52.0 (132.1)	Not limited	80.0 (203.2)	Not limited	0.108	(2.74)	0.111	(2.82)
60.0 (152.4)	74.0 (188.0)	84.0 (213.4)	103.0 (261.6)	[11]		[11]	

Table 7.2 Continued on Next Page

Documents
Document Sharing Hub
Full document details: UL 1037 2017

Table 7.2 Continued

Without supporting frame[a]				With supporting frame or equivalent reinforcing[a]				Minimum thickness uncoated,		Minimum thickness metal coated,	
Maximum width,[b] inches	(cm)	Maximum length,[c] inches	(cm)	Maximum Width,[b] inches	(cm)	Maximum length, inches	(cm)	inch [MSG]	(mm)	inch [GSG]	(mm)
63.0	(160.0)	Not limited		97.0	(246.4)	Not limited		0.123	(3.12)	0.126	(3.20)
73.0	(185.4)	90.0	(228.6)	103.0	(261.6)	127.0	(322.6)	[10]		[10]	

[a] A supporting frame is a structure of angle or channel or a folded rigid section of sheet metal which is rigidly attached to and has essentially the same outside dimensions as the enclosure surface and which has sufficient torsional rigidity to resist the bending moments which may be applied via the enclosure surface when it is deflected. Construction that is considered to have equivalent reinforcing may be accomplished by designs that will produce a structure that is as rigid as one built with a frame of angles or channels. Construction considered to be without supporting frame includes:

1) A single sheet with single formed flanges (formed edges),
2) A single sheet which is corrugated or ribbed, and
3) An enclosure surface loosely attached to a frame, for example, with spring clips.

[b] The width is the smaller dimension of a rectangular sheet metal piece which is part of an enclosure. Adjacent surfaces of an enclosure may have supports in common and be made of a single sheet.

[c] For panels which are not supported along one side, for example, side panels of boxes, the length of the unsupported side shall be limited to the dimensions specified unless the side in question is provided with a flange at least 1/2 inch (12.7 mm) wide.

Table 7.3
Minimum thickness of sheet metal for electrical enclosures aluminum, copper, or brass

Without supporting frame[a]				With supporting frame or equivalent reinforcing[a]					
Maximum width,[b] inches	(cm)	Maximum length,[c] inches	(cm)	Maximum width,[b] inches	(cm)	Maximum length, inches	(cm)	Minimum thickness, inches	(mm)
3.0	(7.6)	Not limited		7.0	(17.8)	Not limited		0.023	(0.58)
3.5	(8.9)	4.0	(10.2)	8.5	(21.6)	9.5	(24.1)		
4.0	(10.2)	Not limited		10.0	(25.4)	Not limited		0.029	(0.74)
5.0	(12.7)	6.0	(15.2)	10.5	(26.7)	13.5	(34.3)		
6.0	(15.2)	Not limited		14.0	(35.6)	Not limited		0.036	(0.91)
6.5	(16.5)	8.0	(20.3)	15.0	(38.1)	18.0	(45.7)		
8.0	(20.3)	Not limited		19.0	(48.3)	Not limited		0.045	(1.14)
9.5	(24.1)	11.5	(29.2)	21.0	(53.3)	25.0	(63.5)		
12.0	(30.5)	Not limited		28.0	(71.1)	Not limited		0.058	(1.47)
14.0	(35.6)	16.0	(40.6)	30.0	(76.2)	37.0	(94.0)		
18.0	(45.7)	Not limited		42.0	(106.7)	Not limited		0.075	(1.91)
20.0	(50.8)	25.0	(63.4)	45.0	(114.3)	55.0	(139.7)		
25.0	(63.5)	Not limited		60.0	(152.4)	Not limited		0.095	(2.41)
29.0	(73.7)	36.0	(91.4)	64.0	(162.6)	78.0	(198.1)		
37.0	(94.0)	Not limited		87.0	(221.0)	Not limited		0.122	(3.10)
42.0	(106.7)	53.0	(134.6)	93.0	(236.2)	114.0	(289.6)		

Table 7.3 Continued on Next Page

Documents
Document Sharing Hub
Full document details: UL 1037 2017

Table 7.3 Continued

Without supporting frame[a]				With supporting frame or equivalent reinforcing[a]					
Maximum width,[b] inches	(cm)	Maximum length,[c] inches	(cm)	Maximum width,[b] inches	(cm)	Maximum length, inches	(cm)	Minimum thickness, inches	(mm)
52.0	(132.1)	Not limited		123.0	(312.4)	Not limited		0.153	(3.89)
60.0	(152.4)	74.0	(188.0)	130.0	(330.2)	160.0	(406.4)		

[a] A supporting frame is a structure of angle or channel or a folded rigid section of sheet metal which is rigidly attached to and has essentially the same outside dimensions as the enclosure surface and which has sufficient torsional rigidity to resist the bending moments which may be applied via the enclosure surface when it is deflected. Construction that is considered to have equivalent reinforcing may be accomplished by designs that will produce a structure which is as rigid as one built with a frame of angles or channels. Construction considered to be without supporting frame includes:

1) A single sheet with single formed flanges (formed edges),
2) A single sheet which is corrugated or ribbed, and
3) An enclosure surface loosely attached to a frame, for example, with spring clips.

[b] The width is the smaller dimension of a rectangular sheet metal piece which is part of an enclosure. Adjacent surfaces of an enclosure may have supports in common and be made of a single sheet.

[c] For panels which are not supported along one side, for example, side panels of boxes, the length of the unsupported side shall be limited to the dimensions specified unless the side in question is provided with a flange at least 1/2 inch (12.7 mm) wide.

7.6.2 A sheet metal member to which a wiring system is to be connected in the field shall have a thickness of not less than 0.032 inch (0.81 mm) if of uncoated steel; of not less than 0.034 inch (0.86 mm) if of galvanized steel; and of not less than 0.045 inch (1.14 mm) if of nonferrous metal.

7.6.3 A plate or plug closure for an unused conduit opening or other hole in the enclosure shall have a thickness not less than 0.027 inch (0.69 mm) if of steel, or 0.032 inch (0.81 mm) if of nonferrous metal, for a hole having a 1-3/8 inch (34.9 mm) maximum diameter.

7.6.4 A closure for a hole larger than 1-3/8 inch (34.9 mm) diameter shall have a thickness equal to that required for the enclosure of the product, or a standard knockout seal shall be used. Such plates or plugs shall be securely mounted.

7.6.5 A knockout in a sheet metal enclosure shall be capable of being removed without excess deformation of the enclosure.

7.6.6 A knockout shall be provided with a surrounding surface of sufficient area to provide for seating of a conduit bushing and shall be located so that installation of a bushing at any knockout likely to be used during installation would not result in spacings between uninsulated live parts and the bushing of less than those specified under Spacings, General, Section 23.

Documents
Document Sharing Hub
Full document details: UL 1037 2017

7.7 Product enclosure mounting

7.7.1 An enclosure shall have means for mounting that shall be accessible without disassembly of any operating part of the product. Removal of a completely assembled panel to mount the enclosure is not considered to be disassembly of an operating part.

7.8 Polymeric materials

7.8.1 Among the factors to be taken into consideration when evaluating the acceptability of a nonmetallic enclosure are:

a) The mechanical strength;

b) Resistance to impact;

c) Moisture-absorptive properties;

d) Flammability and resistance to ignition from electrical sources;

e) Dielectric strength, insulation resistance, and resistance to arc tracking; and

f) Resistance to distortion and creeping at temperatures to which the material may be subjected under any conditions of use.

All these factors are to be considered with respect to aging in accordance with the Polymeric Materials Test, Section 46, and the Mechanical Strength Tests for Enclosures, Section 51.

8 Electric Shock

8.1 Any part that is exposed only during operator servicing shall not present a risk of electric shock. See the Electric Shock Current Test, Section 35.

8.2 Each terminal provided for the connection of an external antenna shall be conductively connected to the supply circuit grounded conductor. The conductive connection shall have a maximum resistance of 5.2 megohms, a minimum wattage rating of 1/2 watt, and shall be effective with the power switch in either the on or off position.

Exception: The conductive connection need not be provided if:

a) Such a connection is established in the event of electrical breakdown of the antenna isolating means;

b) The breakdown does not result in a risk of electric shock; and,

c) In a construction using an isolating power transformer, the resistance of the conductive connection between the supply circuit and chassis does not exceed 5.2 megohms.

Documents
Document Sharing Hub

Full document details: UL 1037 2017

8.3 The maximum value of 5.2 megohms mentioned in 8.2 is to include the maximum tolerance of the resistor value used; that is, a resistor rated 4.2 megohms with a 20 percent tolerance or a resistor rated 4.7 megohms with a 10 percent tolerance. A component comprised of a capacitor with a built-in shunt resistor that complies with the requirements for antenna isolating capacitors may be rated a minimum of 1/4 watt.

8.4 The replacement of any component used in the product shall not result in a risk of electric shock.

9 Corrosion Protection

9.1 Iron and steel parts, other than bearings, and the like, where such protection is impracticable, shall be protected against corrosion by enameling, galvanizing, sherardizing, plating, or other means that have been determined to be equivalent. Bearing surfaces shall be of such materials and construction as to resist binding due to corrosion.

9.2 The requirement in 9.1 applies to all enclosures of sheet steel or cast iron, and to all springs and other parts upon which intended mechanical operation may depend.

Exception No. 1: This requirement does not apply to parts, such as washers, screws, bolts, and the like, if corrosion or malfunction of such unprotected parts would not be likely to result in a risk of fire, electric shock, or unintentional contact with moving parts that may cause injury to persons, or to impair the operation of the unit.

Exception No. 2: Parts made of stainless steel, polished or treated, if necessary, do not require additional protection against corrosion.

9.3 Metals used in cabinets and enclosures shall be galvanically compatible.

Exception: This requirement does not apply if galvanic action does not impair intended operation of the product; or result in a risk of fire, electric shock, or unintentional contact with moving parts that may cause injury to persons.

9.4 Hinges and other attachments shall be resistant to corrosion.

FIELD WIRING CONNECTIONS

10 General

10.1 Wiring terminals or leads shall be provided for connection of conductors of at least the size required by the National Electrical Code, ANSI/NFPA 70.

Documents
Document Sharing Hub

Full document details: UL 1037 2017

11 Cord Connected Products

11.1 A portable product that is intended to be connected to high-voltage or line voltage shall be provided with not less than 6 feet (1.8 m) of flexible cord and a two or three prong attachment plug rated for connection to the supply circuit.

Exception: The cord may be less than 6 feet in length if it is evident that the use of the longer cord may result in damage to the cord or product; result in risk of fire, electric shock, or injury to persons, impair intended operation of the product; or is not required for the intended operation of the product.

11.2 A flexible cord may be used with a stationary product.

11.3 A flexible cord shall be of Type SJ, SJT, or have been determined to be equivalent, and have conductors not smaller than 18 AWG (0.82 mm^2). It shall be rated for use at the voltage and current rating of the product.

11.4 The power supply cord shall be provided with strain relief means so that a stress on the cord would not be transmitted to terminals, splices, or internal wiring. See the Strain Relief Test, Section 49.

11.5 If a knot in a flexible cord serves as strain relief, a surface against which the knot may bear or with which it may come in contact shall be free from projections, sharp edges, burrs, fins, and the like, which may cause abrasion of the insulation on the conductors.

11.6 Clamps of any material (metal or otherwise) may be used on cords and supply leads without varnished-cloth insulating tubing, or that which is determined to be equivalent, unless the tubing, or that which is determined to be equivalent, is necessary to prevent the clamp from damaging the cord or supply leads.

11.7 The supply cord or supply leads shall not be capable of being pushed into the unit through the cord-entry hole if such displacement is likely to:

a) Subject the cord or supply leads to mechanical damage or to exposure to a temperature higher than that for which the cord or supply leads are rated,

b) Reduce spacings (such as to a metal strain-relief clamp) below the minimum values, or

c) Damage internal connections or components.

Documents
Document Sharing Hub

Full document details: UL 1037 2017

12 Permanently Connected Products

12.1 General

12.1.1 A fixed product shall have provision for connection of one of the wiring systems that would be acceptable for it, in accordance with the National Electrical Code, ANSI/NFPA 70.

12.1.2 A knockout provided for connection of a field-wiring system to a field-wiring compartment shall accommodate conduit of the trade size determined as specified in Table 12.1.

Table 12.1
Trade size of conduit, inches (mm OD)

Wire size,		Number of wires									
AWG	(mm^2)	2		3		4		5		6	
14	(2.1)	1/2	(21.3)	1/2	(21.3)	1/2	(21.3)	1/2	(21.3)	1/2	(21.3)
12	(3.3)	1/2	(21.3)	1/2	(21.3)	1/2	(21.3)	3/4	(26.7)	3/4	(26.7)
10	(5.3)	1/2	(21.3)	1/2	(21.3)	1/2	(21.3)	3/4	(26.7)	3/4	(26.7)
8	(8.4)	3/4	(26.7)	1	(33.4)	1	(33.4)	1	(33.4)	1-1/4	(42.3)
6	(13.3)	3/4	(26.7)	1	(33.4)	1	(33.4)	1-1/4	(42.3)	1-1/4	(42.3)

NOTE – This table is based on the assumption that all conductors will be of the same size and there will be not more than six conductors in the conduit. If more than six conductors will be involved or if all of them are not of the same size, the internal cross-sectional area of the smallest conduit that may be used is determined by multiplying by 2.5 the total cross-sectional area of the wires, based on the cross-sectional area of Type THW wire.

12.1.3 The location of a terminal box or compartment in which power supply connections are to be made shall permit the connections to be accessible without removal of parts other than a service cover or panel and the cover of the outlet box or compartment in which the connections are made.

12.1.4 A terminal compartment intended for the connection of a supply raceway shall be secured in position and shall be prevented from turning.

12.1.5 The product shall be provided with field-wiring terminals or leads for the connection of conductors having an ampacity not less than that required by the product. It is assumed that branch circuit conductors rated 60°C (140°F) will be used.

Documents
Document Sharing Hub
Full document details: UL 1037 2017

12.2 Field wiring terminals

12.2.1 General application

12.2.1.1 As specified in these requirements, field-wiring terminals are those terminals to which power supply (including equipment grounding) or control connections would be made in the field when the product is installed as intended.

12.2.1.2 A field wiring terminal shall comply with the requirements in:

a) 12.2.1.3 – 12.2.1.8; or

b) The field wiring requirements in the Standard for Electrical Quick-Connect Terminals, UL 310; or

c) The Standard for Wire Connectors, UL 486A-486B; or

d) The Standard for Equipment Wiring Terminals for Use with Aluminum and/or Copper Conductors, UL 486E; or

e) The field wiring requirements (Code 2) in the Standard for Terminal Blocks, UL 1059.

The current-carrying parts shall be silver, copper, a copper alloy, or a similar nonferrous conductive material. Securing screws and the like may be plated steel. Equipment provided with quick-connect terminals intended for field termination of electrical conductors to the equipment and complying with the Standard for Electrical Quick-Connect Terminals, UL 310, shall be provided with strain relief and the installation instructions shall include instructions for effecting the strain relief and include reference to the specific connectors to be used.

12.2.1.3 A field-wiring terminal shall be prevented from turning or shifting in position. This may be accomplished by means such as two screws or rivets; by square shoulders or mortises; by a dowel pin, lug, or offset; or by a connecting strap or clip fitted into an adjacent part. Friction between surfaces shall not be used for preventing movement of the terminals.

12.2.1.4 Nonferrous soldering lugs or solderless (pressure) wire connectors shall be used for 8 AWG (8.4 mm^2) and larger wires. If the connectors or lugs are secured to a plate, the plate thickness shall not be less than 0.050 inch (1.3 mm). Securing screws may be plated steel.

12.2.1.5 A wire binding screw intended for connection of the power supply (line voltage) source shall not be smaller than No. 10 (4.8 mm diameter). The screw may be of plated steel.

Exception: A No. 8 (4.2 mm diameter) screw may be used for the connection of one 14 AWG (2.1 mm^2) conductor and a No. 6 (3.5 mm diameter) screw may be used for the connection of a 16 or 18 AWG (1.3 or 0.8 mm^2) conductor.

12.2.1.6 For connection of other than power supply (line voltage) circuits using 10 AWG (5.3 mm^2) and smaller wires, a wire binding screw shall not be smaller than No. 8 (4.2 mm diameter), except that a No. 6 (3.5 mm diameter) screw may be used for the connection of one 14 AWG (2.1-mm^2) or smaller conductor and a No. 4 (2.8 mm diameter) screw may be used for the connection of one 19 AWG (0.65 mm^2) or smaller conductor.

Documents
Document Sharing Hub
Full document details: UL 1037 2017