# UL 122

ISBN 0-7629-0276-0

# Photographic Equipment

Documents
Document Sharing Hub

Full document details: UL 122 2001

Documents
Document Sharing Hub

Full document details: UL 122 2001

Underwriters Laboratories Inc. (UL)
333 Pfingsten Road
Northbrook, IL 60062-2096

UL Standard for Safety for Photographic Equipment, UL 122

Fourth Edition, Dated April 9, 1999

Revisions: This Standard contains revisions through and including July 11, 2001.

UL Standards for Safety are developed and maintained in the Standard Generalized Markup Language (SGML). SGML -- an international standard (ISO 8879-1986) -- is a descriptive markup language that describes a document's structure and purpose, rather than its physical appearance on a page. Due to formatting differences resulting from the use of UL's new electronic publishing system, please note that additional pages (on which no requirements have been changed) may be included in revision pages due to relocation of existing text and reformatting of the Standard.

Text that has been changed in any manner is marked with a vertical line in the margin. Changes in requirements are marked with a vertical line in the margin and are followed by an effective date note indicating the date of publication or the date on which the changed requirement becomes effective.

The new and/or revised requirements are substantially in accordance with UL's Bulletin(s) on this subject dated October 13, 2000. The bulletin(s) is now obsolete and may be discarded.

The revisions dated July 11, 2001 include a reprinted title page (page1) for this Standard.

The master for this Standard at UL's Northbrook Office is the official document insofar as it relates to a UL service and the compliance of a product with respect to the requirements for that product and service, or if there are questions regarding the accuracy of this Standard.

UL's Standards for Safety are copyrighted by UL. Neither a printed copy of a Standard, nor the distribution diskette for a Standard-on-Diskette and the file for the Standard on the distribution diskette should be altered in any way. All of UL's Standards and all copyrights, ownerships, and rights regarding those Standards shall remain the sole and exclusive property of UL.

All rights reserved. No part of this publication may be reproduced, stored in a retrieval system, or transmitted in any form by any means, electronic, mechanical photocopying, recording, or otherwise without prior permission of UL.

Revisions of UL Standards for Safety are issued from time to time. A UL Standard for Safety is current only if it incorporates the most recently adopted revisions.

UL provides this Standard ″as is″ without warranty of any kind, either expressed or implied, including but not limited to, the implied warranties of merchantability or fitness for any purpose.

In no event will UL be liable for any special, incidental, consequential, indirect or similar damages, including loss of profits, lost savings, loss of data, or any other damages arising out of the use of or the inability to use this Standard, even if UL or an authorized UL representative has been advised of the possibility of such damage. In no event shall UL's liability for any damage ever exceed the price paid for this Standard, regardless of the form of the claim.

Documents
Document Sharing Hub

Full document details: UL 122 2001

UL will attempt to answer support requests concerning electronic versions of its Standards. However, this support service is offered on a reasonable efforts basis only, and UL may not be able to resolve every support request. UL supports the electronic versions of its Standards only if they are used under the conditions and operating systems for which it is intended. UL's support policies may change from time-to-time without notification.

UL reserves the right to change the format, presentation, file types and formats, delivery methods and formats, and the like of both its printed and electronic Standards without prior notice.

Purchasers of the electronic versions of UL's Standards for Safety agree to defend, indemnify, and hold UL harmless from and against any loss, expense, liability, damage, claim, or judgement (including reasonable attorney's fees) resulting from any error or deviation introduced while purchaser is storing an electronic Standard on the purchaser's computer system.

If a single-user version electronic Standard was purchased, one copy of this Standard may be stored on the hard disk of a single personal computer, or on a single LAN file-server or the permanent storage device of a multiple-user computer in such a manner that this Standard may only be accessed by one user at a time and for which there is no possibility of multiple concurrent access.

If a multiple-user version electronic Standard was purchased, one copy of the Standard may be stored on a single LAN file-server, or on the permanent storage device of a multiple-user computer, or on an Intranet server. The number of concurrent users shall not exceed the number of users authorized.

Electronic Standards are intended for on-line use, such as for viewing the requirements of a Standard, conducting a word search, and the like. Only one copy of the Standard may be printed from each single-user version of an electronic Standard. Only one copy of the Standard may be printed for each authorized user of a multiple-user version of an electronic Standard. Because of differences in the computer/software/printer setup used by UL and those of electronic Standards purchasers, the printed copy obtained by a purchaser may not look exactly like the on-line screen view or the printed Standard.

An employee of an organization purchasing a UL Standard can make a copy of the page or pages being viewed for their own fair and/or practical internal use.

The requirements in this Standard are now in effect, except for those paragraphs, sections, tables, figures, and/or other elements of the Standard having future effective dates as indicated in the note following the affected item. The prior text for requirements that have been revised and that have a future effective date are located after the Standard, and are preceded by a ″SUPERSEDED REQUIREMENTS″ notice.

New product submittals made prior to a specified future effective date will be judged under all of the requirements in this Standard including those requirements with a specified future effective date, unless the applicant specifically requests that the product be judged under the current requirements. However, if the applicant elects this option, it should be noted that compliance with all the requirements in this Standard will be required as a condition of continued Listing, Recognition, and Follow-Up Services after the effective date, and understanding of this should be signified in writing.

Copyright © 2001 Underwriters Laboratories Inc.

Documents
Document Sharing Hub

Full document details: UL 122 2001

This Standard consists of pages dated as shown in the following checklist:

| Page | Date |
|---|---|
| 1-5 | July 11, 2001 |
| 6 | April 9, 1999 |
| 7-8B | July 11, 2001 |
| 9-43 | April 9, 1999 |
| 44-44B | July 11, 2001 |
| 45-49 | April 9, 1999 |
| 50-50B | July 11, 2001 |
| 51-52 | April 9, 1999 |
| 53 | July 11, 2001 |
| 54 | April 9, 1999 |
| 55-56 | July 11, 2001 |
| 57-60 | April 9, 1999 |
| 61-62 | July 11, 2001 |
| 63-93 | April 9, 1999 |
| 94-94B | July 11, 2001 |
| 95-98 | April 9, 1999 |
| SA1-SA3 | July 11, 2001 |
| SA4-SA6 | April 9, 1999 |
| SA7 | July 11, 2001 |
| SA8 | April 9, 1999 |
| A1-A2 | April 9, 1999 |
| CRG1 | April 9, 1999 |
| CRG2 | July 11, 2001 |
| CRG3-CRG10 | April 9, 1999 |
| SR1-SR6 | April 9, 1999 |

Documents
Document Sharing Hub

Full document details: UL 122 2001

No Text on This Page

Documents
Document Sharing Hub

Full document details: UL 122 2001

**APRIL 9, 1999**
(Title Page Reprinted: July 11, 2001)



# UL 122

## Standard for Photographic Equipment

First Edition – February, 1974
Second Edition – August, 1984
Third Edition – June, 1993

**Fourth Edition**

**April 9, 1999**

An effective date included as a note immediately following certain requirements is one established by Underwriters Laboratories Inc.

Revisions of this Standard will be made by issuing revised or additional pages bearing their date of issue. A UL Standard is current only if it incorporates the most recently adopted revisions, all of which are itemized on the transmittal notice that accompanies the latest set of revised requirements.

**ISBN 0-7629-0276-0**

**COPYRIGHT © 1974, 2001 UNDERWRITERS LABORATORIES INC.**

Documents
Document Sharing Hub

Full document details: UL 122 2001

No Text on This Page

Documents
Document Sharing Hub

Full document details: UL 122 2001

## CONTENTS

**FOREWORD** . . . . . 6

**INTRODUCTION**

1 Scope . . . . . 7
2 General . . . . . 8
2.1 Components . . . . . 8
2.2 Units of measurement . . . . . 8
2.3 Undated references . . . . . 8
3 Terminology . . . . . 8A
4 Glossary . . . . . 8A

**CONSTRUCTION**

5 Moisture Condensation . . . . . 10
6 Frame and Enclosure . . . . . 10
6.1 General . . . . . 10
6.2 Remotely- and automatically-controlled appliances . . . . . 11
6.3 Enclosure material . . . . . 12
7 Accessibility of Live Parts . . . . . 14
7.1 Openings . . . . . 14
7.2 Pin terminals . . . . . 19
8 Mechanical Assembly . . . . . 19
9 Protection Against Corrosion . . . . . 20
10 Power Supply Connections . . . . . 20
10.1 Cord-connected appliances . . . . . 20
10.2 Permanently-connected appliances . . . . . 25
11 Current-Carrying Parts . . . . . 27
12 Internal Wiring . . . . . 27
12.1 Mechanical protection . . . . . 27
12.2 Types of wire . . . . . 28
12.3 Splices and connections . . . . . 28
13 Grounding and Bonding . . . . . 29
13.1 Grounding . . . . . 29
13.2 Bonding . . . . . 31
14 Interconnecting Cords and Cables . . . . . 32
15 Receptacles and Connectors . . . . . 33
16 Separation of Circuits . . . . . 34
17 Insulating Material . . . . . 34
17.1 Electrical insulation . . . . . 34
17.2 Thermal insulation . . . . . 35
18 Overcurrent Protection . . . . . 35
18.1 General . . . . . 35
18.2 Motors . . . . . 36
18.3 Lampholders and receptacles . . . . . 37
18.4 Primary circuits . . . . . 37
18.5 Secondary circuits . . . . . 37
19 Short-Circuit and Ground-Fault Protection . . . . . 38
20 Motors . . . . . 39
21 Switching Devices . . . . . 39

Documents
Document Sharing Hub

Full document details: UL 122 2001

21.1 General . . . . . 39
21.2 Rating . . . . . 39
22 Lampholders . . . . . 40
23 Medium- and High-Pressure Lamps . . . . . 41
24 Capacitors . . . . . 41
24.1 Motor and power-factor capacitors . . . . . 41
24.2 Isolating capacitors . . . . . 42
24.3 Interference elimination capacitors . . . . . 42
24.4 Capacitor discharge . . . . . 42
24.5 Capacitor rating . . . . . 43
25 Transformers . . . . . 43
26 Heating Elements . . . . . 43
27 Printed-Wiring Boards . . . . . 43
28 Lasers . . . . . 43
29 Modems and Modem Cards . . . . . 44
30 Spacings . . . . . 44
30.1 General . . . . . 44
30.2 Field-wiring terminal spacings . . . . . 44
30.3 Primary circuit spacings . . . . . 45
30.4 Limited-primary circuit spacings . . . . . 46
30.5 Multiple spacings . . . . . 46
30.6 Barriers for spacings . . . . . 46
30.7 Secondary and battery circuit spacings . . . . . 47
31 Secondary and Battery Circuits . . . . . 47
32 Low-Voltage, Limited-Energy Circuits . . . . . 47
33 Safety Circuits . . . . . 49
34 Liquid Containers, Seals, and Diaphragms . . . . . 49

**PROTECTION AGAINST INJURY TO PERSONS**

35 General . . . . . 50
36 Sharp Edges . . . . . 50A
37 Enclosure of Moving Parts . . . . . 50A
38 Stability . . . . . 51
39 Strength of Handles . . . . . 52
40 Glass Parts . . . . . 52
41 Interlocks . . . . . 52
42 Surface Temperatures . . . . . 55
43 Cord Flexing . . . . . 56
44 Marking . . . . . 58

**PERFORMANCE**

45 General . . . . . 58
46 Resistance of Grounding Circuit . . . . . 58
47 Leakage Current and Shock Current Tests . . . . . 59
47.1 General . . . . . 59
47.2 Leakage current . . . . . 60
47.3 Shock current . . . . . 64
47.4 Transient electric shock . . . . . 65
47.5 Stored energy electric shock . . . . . 67
47.6 Tube interchange and substitution . . . . . 67
47.7 Standardized pin/socket arrangements . . . . . 67

Documents
Document Sharing Hub
Full document details: UL 122 2001

48 Leakage Current Following Humidity Conditioning Test ....69
49 Operational Tests ....70
50 Starting Current Test ....70
51 Input Test ....70
51.1 General ....70
51.2 Maximum normal load ....71
52 Temperature Test ....73
52.1 General ....73
52.2 Ambient temperatures ....74
52.3 Temperature measurements ....74
52.4 Operation for temperature test ....78
53 Potential Measurements ....78
54 Electrolytic Capacitor Test ....78
55 Dielectric Voltage-Withstand Test ....79
55.1 Primary circuits ....79
55.2 Limited primary circuits ....80
55.3 Secondary and battery circuits ....80
55.4 Interconnecting cables ....80
55.5 Maximum voltage ....81
56 Abnormal Operation Tests ....81
56.1 General ....81
56.2 Test conditions ....82
56.3 Components ....83
56.4 Limited primary ....83
56.5 Transformers ....83
56.6 Silver recovery unit ....83
57 Ozone Test ....83
58 Strength of Enclosure Test ....84
58.1 General ....84
58.2 Wood, glass, and metal enclosures ....84
59 Strain Relief Test ....85
60 Cord and Cable Push-Back Relief Test ....85
61 Fluid Entry Test ....85

**MANUFACTURING AND PRODUCTION TESTS**

62 Dielectric Voltage-Withstand Test ....86
63 Electrical Continuity Test ....87
63.1 Grounding continuity ....87
63.2 Grounded conductor ....88

**RATING**

64 Electrical Rating ....88

**MARKING**

65 General ....88
66 Informational ....88
66.1 Identification and rating ....88
66.2 Alternate supply voltages ....89
66.3 Multiple factory ....89
66.4 Lamp replacement ....89

Documents
Document Sharing Hub
Full document details: UL 122 2001

66.5 Other than general-purpose receptacle . . . . . 90
66.6 On-off switch . . . . . 90
66.7 Wiring compartment . . . . . 90
66.8 Use of circuit breaker or time-delay fuses . . . . . 91
66.9 Projector for professional use . . . . . 91
66.10 Component replacement . . . . . 91
66.11 Supply circuit and overcurrent protective device . . . . . 91
67 Cautionary . . . . . 91
67.1 General . . . . . 91
67.2 Ultraviolet lamp . . . . . 92
67.3 High-pressure lamp . . . . . 92
67.4 Capacitor discharge . . . . . 92
67.5 Battery . . . . . 92
67.6 Hot surface . . . . . 92
67.7 Servicing . . . . . 92
67.8 Fuse replacement . . . . . 93
67.9 Bonding . . . . . 93
67.10 Flammable film . . . . . 93
67.11 Ungrounded dead-metal parts . . . . . 93
67.12 Stability . . . . . 93
67.13 Lasers . . . . . 93

## INSTRUCTIONS

68 General . . . . . 94
69 Safety Instructions . . . . . 94A

## ACCESSORY EQUIPMENT

70 General . . . . . 96
71 Construction . . . . . 96
72 Performance . . . . . 97
72.1 General . . . . . 97
72.2 Installation and operation . . . . . 97
73 Marking . . . . . 97

## SUPPLEMENT SA - HIGH-PRESSURE LAMPS AND LAMP SYSTEMS

SA1 Scope . . . . . SA1
SA2 Glossary . . . . . SA1
SA3 General . . . . . SA2
SA4 Enclosure . . . . . SA2
SA5 Internal Construction . . . . . SA3
SA6 General . . . . . SA3
SA7 Power Input Test . . . . . SA3
SA8 Normal Temperature Test . . . . . SA3
SA9 Dielectric Voltage-Withstand Test . . . . . SA4
SA10 Abnormal Operation Test . . . . . SA5
SA11 Nonmetallic Enclosure Test . . . . . SA5
SA12 Oven Conditioning . . . . . SA6
SA13 Resistance to Impact Test . . . . . SA6

Documents
Document Sharing Hub
Full document details: UL 122 2001

SA14 Ozone Test . . . . . SA7
SA15 Hot Restrike Test . . . . . SA7
SA16 General . . . . . SA7

**APPENDIX A**

Standards for Components. . . . . A1

**CANADIAN REQUIREMENTS COMPARISON GUIDE CRG 122**

UL AND CANADIAN STANDARDS FOR PHOTOGRAPHIC EQUIPMENT . . . . . CRG1

Documents
Document Sharing Hub
Full document details: UL 122 2001

## FOREWORD

A. This Standard contains basic requirements for products covered by Underwriters Laboratories Inc. (UL) under its Follow-Up Service for this category within the limitations given below and in the Scope section of this Standard. These requirements are based upon sound engineering principles, research, records of tests and field experience, and an appreciation of the problems of manufacture, installation, and use derived from consultation with and information obtained from manufacturers, users, inspection authorities, and others having specialized experience. They are subject to revision as further experience and investigation may show is necessary or desirable.

B. The observance of the requirements of this Standard by a manufacturer is one of the conditions of the continued coverage of the manufacturer's product.

C. A product which complies with the text of this Standard will not necessarily be judged to comply with the Standard if, when examined and tested, it is found to have other features which impair the level of safety contemplated by these requirements.

D. A product employing materials or having forms of construction which conflict with specific requirements of the Standard cannot be judged to comply with the Standard. A product employing materials or having forms of construction not addressed by this Standard may be examined and tested according to the intent of the requirements and, if found to meet the intent of this Standard, may be judged to comply with the Standard.

E. UL, in performing its functions in accordance with its objectives, does not assume or undertake to discharge any responsibility of the manufacturer or any other party. The opinions and findings of UL represent its professional judgment given with due consideration to the necessary limitations of practical operation and state of the art at the time the Standard is processed. UL shall not be responsible to anyone for the use of or reliance upon this Standard by anyone. UL shall not incur any obligation or liability for damages, including consequential damages, arising out of or in connection with the use, interpretation of, or reliance upon this Standard.

F. Many tests required by the Standards of UL are inherently hazardous and adequate safeguards for personnel and property shall be employed in conducting such tests.

Documents
Document Sharing Hub

Full document details: UL 122 2001

## INTRODUCTION

### 1 Scope

1.1 These requirements cover electrically-operated, cord-connected photographic equipment rated 300 V or less, and permanently connected photographic equipment rated 600 volts or less, intended for household or commercial use on interior wiring systems in accordance with the National Electrical Code, NFPA 70. These requirements also cover battery-powered photographic equipment involving a risk of fire or electric shock.

1.2 These requirements cover motion picture projectors, including those intended for use in motion picture theaters; still picture projectors; equipment intended for use in taking photographs; accessories intended for use with or installation upon picture projectors or intended to be employed in viewing, editing or handling films, slides, pictures, drawings, or similar stationary graphic material; cameras; chemical replenishers; contact printers; enlargers; exposure meters; film copiers, film cutters, film dryers; film editors; household film viewers; film and paper processors; film rewinders, film strip projectors; film strip projector-phonograph combinations; film strip projector-tape player combinations; motor-operated projector screens; silent and sound motion picture projectors; print dryers; print processors; printing easels; opaque projectors; overhead projectors; photoflash equipment; photographic timers; photometers, flash cameras; slide projectors; silver recovery units; slide projector-phonograph combinations; slide projector-tape player combinations; slide sorters; slide viewers; stripping and line-up tables; video printers; and similar equipment.

1.3 These requirements do not cover commercial film viewers and dark room safelights, which are evaluated under the requirements for fixtures and portable lamps; projector tables, which are evaluated under the requirements for utility tables; microfilm and micrographic equipment, which are evaluated under the requirements for office appliances and business equipment; or portable photographic lamps and floodlights, which are evaluated under the requirements for stage and studio lighting fixtures.

1.4 Electric photographic equipment intended for use in a hazardous location as defined in the National Electrical Code is evaluated on the basis of its compliance with the requirements in this standard, and other appropriate examination and tests to determine whether it is acceptable for the purpose.

1.5 A product that contains features, characteristics, components, materials, or systems new or different from those covered by the requirements in this standard, and that involves a risk of fire or of electric shock or injury to persons shall be evaluated using appropriate additional component and end-product requirements to maintain the level of safety as originally anticipated by the intent of this standard. A product whose features, characteristics, components, materials, or systems conflict with specific requirements or provisions of this standard does not comply with this standard. Revision of requirements shall be proposed and adopted in conformance with the methods employed for development, revision, and implementation of this standard.

1.5 revised July 11, 2001

Documents
Document Sharing Hub

Full document details: UL 122 2001

## 2 General

### 2.1 Components

2.1.1 Except as indicated in 2.1.2, a component of a product covered by this standard shall comply with the requirements for that component. See Appendix A for a list of standards covering components generally used in the products covered by this standard.

2.1.2 A component is not required to comply with a specific requirement that:

a) Involves a feature or characteristic not required in the application of the component in the product covered by this standard, or

b) Is superseded by a requirement in this standard.

2.1.2 revised July 11, 2001

2.1.3 A component shall be used in accordance with its rating established for the intended conditions of use.

2.1.3 revised July 11, 2001

2.1.4 Specific components are incomplete in construction features or restricted in performance capabilities. Such components are intended for use only under limited conditions, such as certain temperatures not exceeding specified limits, and shall be used only under those specific conditions.

2.1.4 revised July 11, 2001

### 2.2 Units of measurement

2.2.1 Values stated without parentheses are the requirement. Values in parentheses are explanatory or approximate information.

2.2.1 revised July 11, 2001

### 2.3 Undated references

2.3.1 Any undated reference to a code or standard appearing in the requirements of this standard shall be interpreted as referring to the latest edition of that code or standard.

Documents
Document Sharing Hub

Full document details: UL 122 2001

## 3 Terminology

3.1 In the following text, a requirement that applies only to specific equipment is identified by a specific reference in that requirement to the equipment involved. Absence of such specific reference or use of the term appliance indicates that the requirement applies to all equipment covered by this standard.

3.2 The values specified for voltage, current, and power in these requirements are (rms) values unless otherwise specified.

## 4 Glossary

4.1 For the purpose of this standard the following definitions apply.

4.2 ACCESSIBLE – Able to be contacted by an accessibility probe.

4.2 added April 9, 1999

4.3 APPLIANCE – Utilization equipment that uses electrical energy for some function.

4.3 added April 9, 1999

4.4 AUTOMATICALLY CONTROLLED APPLIANCE – An appliance in which energization of a motor, solenoid, magnet, heating device, or a similar device, occurs without manual intervention; or, during any single predetermined cycle of operation, automatic changing of the mechanical load can reduce the speed of a motor sufficiently to reestablish starting-winding connections to the branch circuit. An appliance intended to be used in a commercial movie theater is considered to be automatically controlled.

4.5 CONTINUOUS-DUTY MOTOR – A motor that can operate unattended and under load under any normal conditions of use for 3 hours or more. A commercial film processor is considered to be a continuously operated appliance.

Documents
Document Sharing Hub

Full document details: UL 122 2001

No Text on This Page

Documents
Document Sharing Hub

Full document details: UL 122 2001

4.6 EXPOSED – Visible but not necessarily able to be contacted by an accessibility probe.

4.6 added April 9, 1999

4.7 FIELD-WIRING TERMINALS – A terminal to which a supply wire or other wire can be connected by an installer in the field, is a field-wiring terminal unless the wire is provided as part of the appliance and a pressure terminal connector, soldering lug, soldered loop, a crimped eyelet, or other means for making the connection is factory-assembled to the wire.

4.8 FUNCTIONAL INSULATION – The insulation required for proper functioning of the appliance and for basic protection against risk of electric shock.

4.9 HAND-SUPPORTED APPLIANCE – An appliance that, during normal operation, is completely supported by the user.

4.10 LEAKAGE AND ELECTRIC SHOCK CURRENT – All current or currents, including capacitively-coupled currents, that may be conveyed between exposed conductive surfaces of an appliance and ground or other exposed conductive surfaces of the appliance.

4.11 LIMITED PRIMARY CIRCUIT – Wiring and components that are conductively connected to the supply circuit for which available power is less than 50 watts determined in accordance with 30.4.2.

4.12 LINE VOLTAGE (PRIMARY) CIRCUITS – The wiring and components that are conductively connected to the supply circuit.

4.13 LIVE PARTS – Metal or other conductive parts that, in normal use, have a potential difference with respect to earth ground or any other conductive part.

4.14 LOW-VOLTAGE, LIMITED-ENERGY CIRCUIT – A circuit that complies with the requirements in Low-Voltage, Limited-Energy Circuits, Section 32.

4.15 PORTABLE APPLIANCE – An appliance that is:

a) Cord-connected, battery-operated, or both;

b) Intended to be transported for use at various locations; and

c) Designed to be carried by hand or provided with integral casters, wheels, and similar parts, or a cart to make it mobile.

4.16 REMOTELY-CONTROLLED APPLIANCE – An appliance that is not within the sight of the operator at the location of the starting device. An appliance intended to be used in a commercial movie theater is considered to be remotely controlled.

4.17 RISK OF ELECTRIC SHOCK – The risk of injury to persons resulting from exposure to a part involving excessive leakage current or excessive shock current. See the Leakage Current and Shock Current Tests, Section 47.

4.18 SAFETY CIRCUIT – A primary or secondary circuit that is relied upon to reduce the risk of fire, electric shock, or injury to persons during normal operation of an appliance.

Documents
Document Sharing Hub

Full document details: UL 122 2001

4.19 USER SERVICING – Any form of servicing that may be performed by personnel other than those who are trained to maintain the particular appliance. Some examples of user servicing are:

a) Attaching an accessory by means of an attachment plug and a receptacle, or by means of other separable connectors.

b) Clearing jammed film, prints, or slides.

c) Resetting a circuit breaker; replacing a battery, a fuse, or a lamp that is accessible without the use of a tool; and, replacing a battery or a lamp likely to require frequent replacement – for example, a projection lamp regardless of whether a tool is required.

d) Making a routine operating adjustment necessary to adapt the appliance for one of its intended functions.

e) Routine cleaning of an optical component, such as a lens or a mirror.

f) Changing solutions, and cleaning a solution tray, a film or print roller, a guide, or a similar part.

## CONSTRUCTION

### 5 Moisture Condensation

5.1 In an appliance provided with a cold-water infeed, uninsulated live parts and electrical components not acceptably protected shall be located so that there shall be no collection of moisture on or flooding of such parts by condensed water vapor dripping from tanks, pipes, and similar parts.

### 6 Frame and Enclosure

#### 6.1 General

6.1.1 The enclosure of an appliance shall house all parts that may present a risk of fire, electric shock, or injury to persons. The enclosure or a portion of the enclosure may be an integral part of a component, a separate item, or all or part of the ultimate enclosure or outer cabinet.

6.1.2 Steel, aluminum, glass – heat-resistant, tempered, wired, or laminated – and equivalent material may be used for the overall enclosure of an appliance.

6.1.3 In addition to the factors specified in 6.1.4, an enclosure of sheet metal shall be evaluated with regard to its size, shape, and thickness, considering the intended use of the appliance.

6.1.4 Among the factors to be considered in evaluating an enclosure are its:

a) Mechanical strength,

b) Resistance to impact,

c) Moisture-absorptive properties,

d) Combustibility,

e) Resistance to corrosion, and

Documents
Document Sharing Hub
Full document details: UL 122 2001

f) Resistance to distortion at temperatures to which the enclosure may be subjected during normal or abnormal use.

For a nonmetallic enclosure, all of these factors are to be considered with regard to thermal aging.

6.1.5 The construction and intended use of the appliance is to be taken into account when evaluating the strength and rigidity of an enclosure. See the Strength of Enclosure Test, Section 58.

6.1.6 The frame and enclosure of an appliance shall have the strength and rigidity needed to resist the abuses to which it is likely to be subjected to during use. The degree of resistance inherent in the appliance shall preclude total or partial collapse with the attendant reduction of spacings, loosening or displacement of parts, and other serious defects that alone or in combination constitute an increase in the risk of fire, electric shock, or injury to persons.

6.1.7 The enclosure of an appliance shall be complete. No dependence shall be placed on an adjacent wall or adjacent equipment to complete an enclosure.

6.1.8 In evaluating the acceptability of the bottom of a portable appliance, consideration shall be given to the possibility of the appliance being placed on an object that could damage wiring or other electrical components. See 58.1.1 and 58.1.2.

**6.2 Remotely- and automatically-controlled appliances**

6.2.1 The enclosure of a remotely or automatically controlled appliance, an appliance intended for operation unattended, or an appliance of which the operation or non-operation would not be evident to the operator, shall prevent molten metal, burning insulation, or flaming particles, from falling outside the enclosure, including the surface upon which the appliance rests or is otherwise supported.

6.2.2 The requirements in 6.2.1 necessitate the use of a barrier or pan of metal or equivalent material:

a) Under a motor unless:

1) The structural parts of the motor or of the appliance provide the equivalent of such a barrier;

2) The overcurrent protection provided with the motor is such that no burning insulation or molten material falls to the surface that supports the appliance when the motor is energized under each of the following fault conditions.

i) Open main winding;

ii) Open auxiliary windings;

iii) Starting switch short-circuited; and

iv) Capacitor of a permanent-split-capacitor motor short-circuited – the short-circuit is to be applied before the motor is energized, and the rotor is to be locked;

3) The motor mounted as intended in the appliance is provided with a thermal motor protector that prevents the temperature of the motor windings from exceeding 125°C (257°F) under the maximum load under which the motor runs without causing the protector to cycle, and from exceeding 150°C (302°F) with the rotor of the motor locked; or

Documents
Document Sharing Hub
Full document details: UL 122 2001

4) The motor complies with the Standard for Overheating Protection for Motors, UL 2111, and the temperature of the motor winding does not exceed 150°C during the first 72 hours of operation with the motor mounted as intended in the appliance and the rotor of the motor locked;

b) Under a fuse, a switch, a relay, a solenoid, a transformer, or similar devices, unless it can be shown that malfunction of the component would not result in a risk of fire.

6.2.3 The barrier specified in 6.2.2 shall be:

a) Horizontal or constructed to provide equivalent protection;

b) Located as indicated in Figure 6.1; and

c) Not smaller in area than is indicated in Figure 6.1.

Openings for drainage, ventilation, and similar openings, shall be used in the barrier if the openings are protected by a baffle or similar protection so that molten metal or burning insulation cannot fall outside the enclosure.

**6.3 Enclosure material**

6.3.1 An enclosure of material having an exposed surface area greater than 10 square feet (0.93 $m^2$) or a single dimension larger than 6 feet (1.83 m) shall have either:

a) A flame-spread rating of 200 or less when tested in accordance with the Standard for Tests for Surface Burning Characteristics of Building Materials, UL 723, or

*Exception: A material with a flame-spread rating higher than 200 is acceptable as the exterior finish or covering on any portion of the enclosure if the flame-spread rating of the combination of the base material and finish or covering is 200 or less.*

b) A flame-spread index of 100 or less when tested in accordance with the radiant-panel furnace methods in the Test Method for Surface Flammability of Materials Using A Radiant Heat Energy Source, ASTM E162.

*Exception No. 1: If all specimens of the thinnest wall section do not exhibit flame propagation, flaming particles, or flaming drops, the flame-spread index for any specimen shall not exceed 200.*

*Exception No. 2: If any specimen of the thinnest wall section exhibits flame propagation but does not exhibit flaming particles or drops, the flame-spread index for any specimens shall not exceed 150.*

6.3.2 The size limits specified in 6.3.1 refer to the exposed surface area of a single unbroken section. If two sides of a single piece are exposed, only the larger side is to be considered in computing the area.

6.3.3 Cast metal and sheet metal portions of the enclosure shall not be thinner than the applicable value specified in Table 6.1.

*Exception: The thickness may be less than the value specified in Table 6.1 if investigated in accordance with the Strength of Enclosure Test, Section 58, and determined to be acceptable for the application as indicated in 6.1.1 – 6.1.7.*

Documents
Document Sharing Hub
Full document details: UL 122 2001

**Figure 6.1**
**Location and extent of barrier**

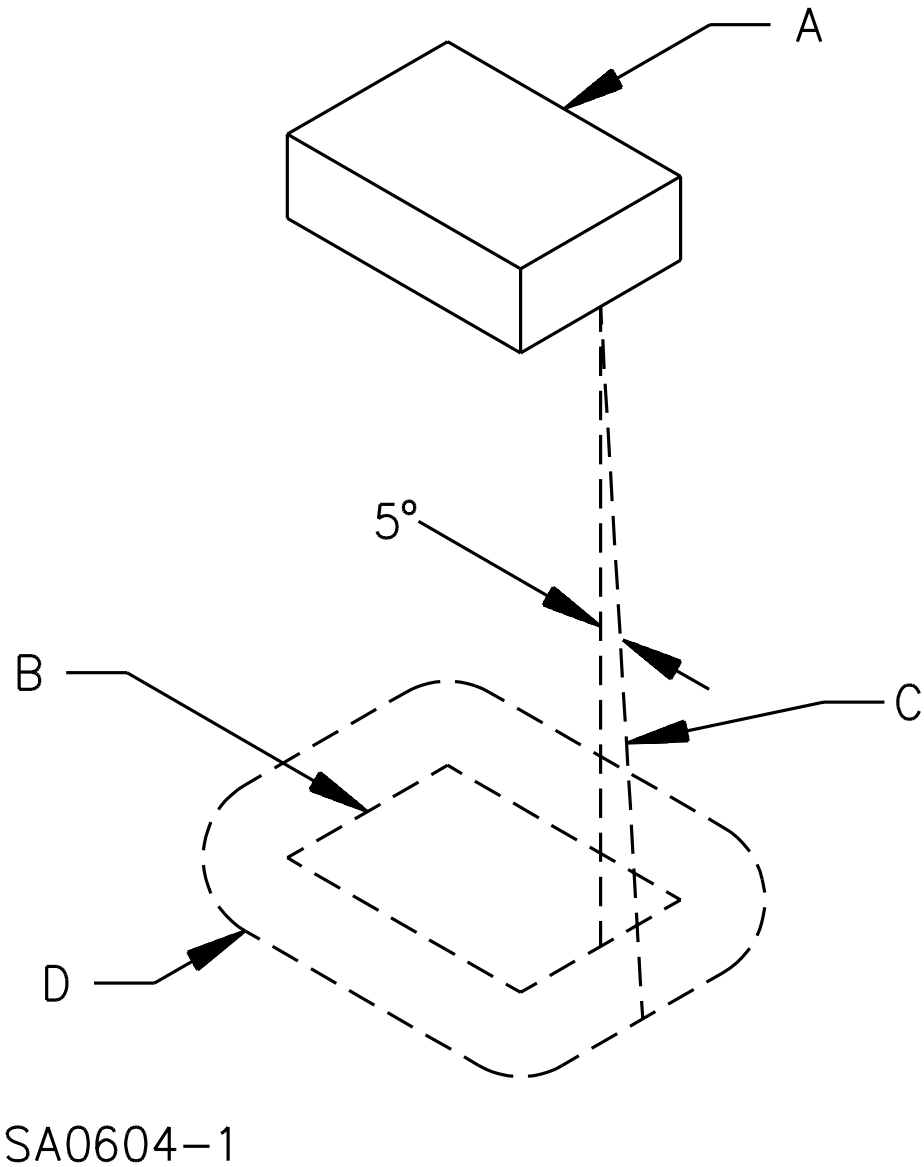


A – Region to be shielded by barrier. This will consist of the entire component if it is not otherwise shielded, and will consist of the unshielded portion of a component which is partially shielded by the component enclosure or equivalent.

B – Projection of outline of component on horizontal plane.

C – Inclined line which traces out minimum area of barrier. When moving, the line is always (1) tangent to the component, (2) five degrees from the vertical, and (3) so oriented that the area traced out on a horizontal plane is maximum.

D – Location (horizontal) and minimum area for barrier. The area is that included inside the line of intersection traced out by the inclined line C and the horizontal plane of the barrier.

Documents
Document Sharing Hub
Full document details: UL 122 2001

**Table 6.1**
**Thickness of metal for enclosures**

| Metal | Minimum thickness, inch | (mm) |
|---|---|---|
| Die-cast | 3/64 | 1.2 |
| Cast malleable iron | 1/16 | 1.6 |
| Other cast metal | 3/32 | 2.4 |
| Uncoated sheet steel | 0.032 | 0.81 |
| Galvanized sheet steel | 0.034 | 0.86 |
| Sheet aluminum | 0.044 | 1.12 |
| Sheet copper and brass | 0.043 | 1.09 |

6.3.4 A polymeric enclosure or a polymeric part of an enclosure employed on an appliance to reduce the risk of fire or electric shock shall comply with the Standard for Polymeric Materials – Use in Electrical Equipment Evaluations, UL 746C.

*Exception: The enclosure of a photoflash unit that is powered only by batteries or a power supply not exceeding low-voltage, limited-energy levels, is not required to meet the flame resistance requirements in the Standard for Polymeric Materials – Use in Electrical Equipment Evaluations, UL 746C, but shall comply with the requirements for classifying materials as HB, V-0, V-1, or V-2 in the Standard for Tests for Flammability of Plastic Materials for Parts in Devices and Appliances, UL 94.*

6.3.4 revised April 9, 1999

6.3.5 If openings for ventilation are provided in the enclosure of a permanently connected appliance, they shall be located so that they will not vent into concealed spaces of a building structure, such as into false-ceiling space, into hollow spaces in the wall, and the like, when the appliance is installed as intended.

6.3.6 During user servicing of household and commercial appliances, electrical parts of an appliance shall be located or enclosed to reduce the risk of electric shock.

## 7 Accessibility of Live Parts

### 7.1 Openings

7.1.1 If a marking draws attention of the user to a hole of any size in the enclosure for the adjustment of a thermostat or for a similar activity, it shall not be possible to damage insulation or contact uninsulated parts involving a risk of electric shock through the hole with a 1/16 inch (1.6 mm) diameter rod.

7.1.2 To reduce the risk of unintentional contact that may involve a risk of electric shock from an uninsulated live part or film-coated wire, an opening in an enclosure shall comply with either (a) or (b).

a) For an opening that has a minor dimension (see 7.1.6) less than 1 inch (25.4 mm), such a part or wire shall not be contacted by the probe illustrated in Figure 7.1.

Documents
Document Sharing Hub
Full document details: UL 122 2001

b) For an opening that has a minor dimension of 1 inch or more, such a part or wire shall be spaced from the opening as specified in Table 7.1.

*Exception: A motor other than one used in either a hand-held product or a hand-supported portion of a product is not required to comply with these requirements if it complies with the requirements in 7.1.3.*

7.1.3 With regard to a part or wire as mentioned in 7.1.2, in an integral enclosure of a motor as mentioned in the Exception to 7.1.2:

a) An opening that has a minor dimension (see 7.1.6) less than 3/4 inch (19.1 mm) is not acceptable if:

1) A moving part can be contacted by the probe illustrated in Figure 7.2;

2) Film-coated wire can be contacted by the probe illustrated in Figure 7.3;

3) In a directly accessible motor (see 7.1.7), an uninsulated live part can be contacted by the probe illustrated in Figure 7.4; and

4) In an indirectly accessible motor (see 7.1.7), an uninsulated live part can be contacted by the probe illustrated in Figure 7.2.

b) An opening that has a minor dimension of 3/4 inch or more is acceptable if a part or wire is spaced from the opening as specified in Table 7.1.

7.1.4 The probes mentioned in 7.1.2 and 7.1.3 and illustrated in Figures 7.1 – 7.4 shall be applied to any depth that the opening will permit; and shall be rotated or angled before, during, and after insertion through the opening to any position that is necessary to examine the enclosure. The probes illustrated in Figure 7.1 and 7.4 shall be applied in any possible configuration; and when required, the configuration shall be changed after insertion through the opening.

7.1.5 The probes mentioned in 7.1.4 and 7.1.6 shall be used as measuring instruments to evaluate the accessibility provided by an opening, and not as instruments to judge the strength of a material; they shall be applied with the minimum force necessary to determine accessibility.

7.1.6 With reference to the requirements in 7.1.2 and 7.1.3, the minor dimension of an opening is the diameter of the largest cylindrical probe having a hemispherical tip that can be inserted through the opening.

7.1.7 With reference to the requirements in 7.1.3, an indirectly accessible motor is a motor that is:

a) Accessible only by opening or removing a part of the outer enclosure, such as a guard or panel that can be opened or removed without using a tool or

b) Located at such a height or is otherwise guarded or enclosed so that it is unlikely to be contacted.

A directly accessible motor is a motor that can be contacted without opening or removing any part or is located so as to be accessible to contact.

7.1.8 During the examination of a product to determine whether it complies with the requirements in 7.1.2 or 7.1.3, a part of the enclosure that may be opened or removed by the user without using a tool (to attach an accessory, to make an operating adjustment, or for other reasons) is to be opened or removed.

Documents
Document Sharing Hub
Full document details: UL 122 2001

**Figure 7.1**
**Articulate probe with web stop**

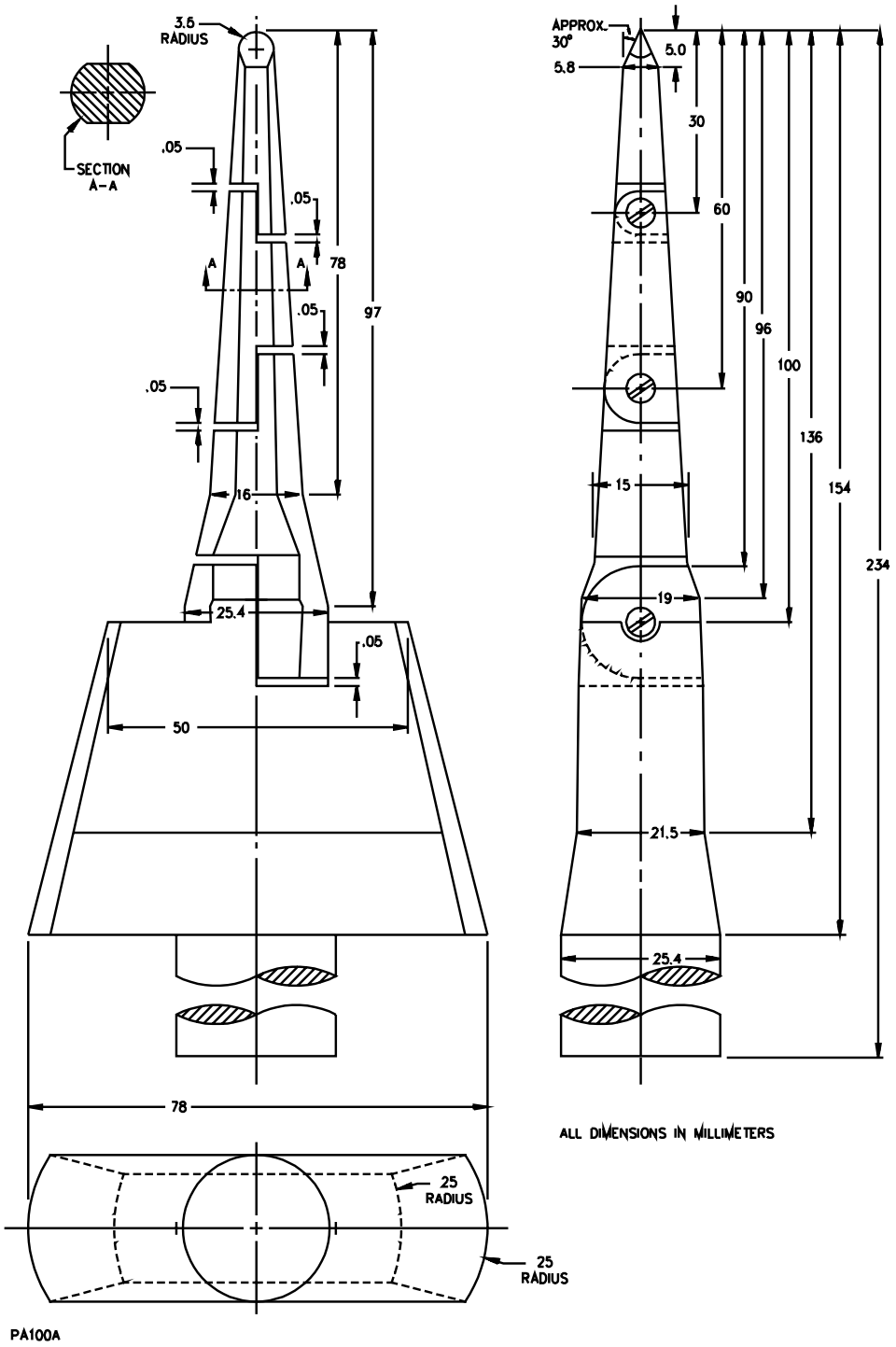


Documents
Document Sharing Hub
Full document details: UL 122 2001

**Table 7.1**
**Minimum distance from an opening to a part that may involve a risk of electric shock or injury to persons**

| Minor dimension[a] of opening, inches | (mm) | Minimum distance from opening to part inches | (mm)[b] |
|---|---|---|---|
| 3/4[c] | 19.1 | 4-1/2 | 114 |
| 1[c] | 25.4 | 6-1/2 | 165 |
| 1-1/4 | 31.8 | 7-1/2 | 190 |
| 1-1/2 | 38.1 | 12-1/2 | 318 |
| 1-7/8 | 47.6 | 15-1/2 | 394 |
| 2-1/8 | 54.0 | 17-1/2 | 444 |
| d | d | 30 | 762 |

[a] See 7.1.6.
[b] Between 3/4 and 2-1/8 inches, interpolation is to be used to determine a value between values specified in the table.
[c] Any dimension less than 1 inch applies to a motor only.
[d] More than 2-1/8 inches, but not more than 6 inches (152 mm).

**Figure 7.2**
**Probe No. 2**

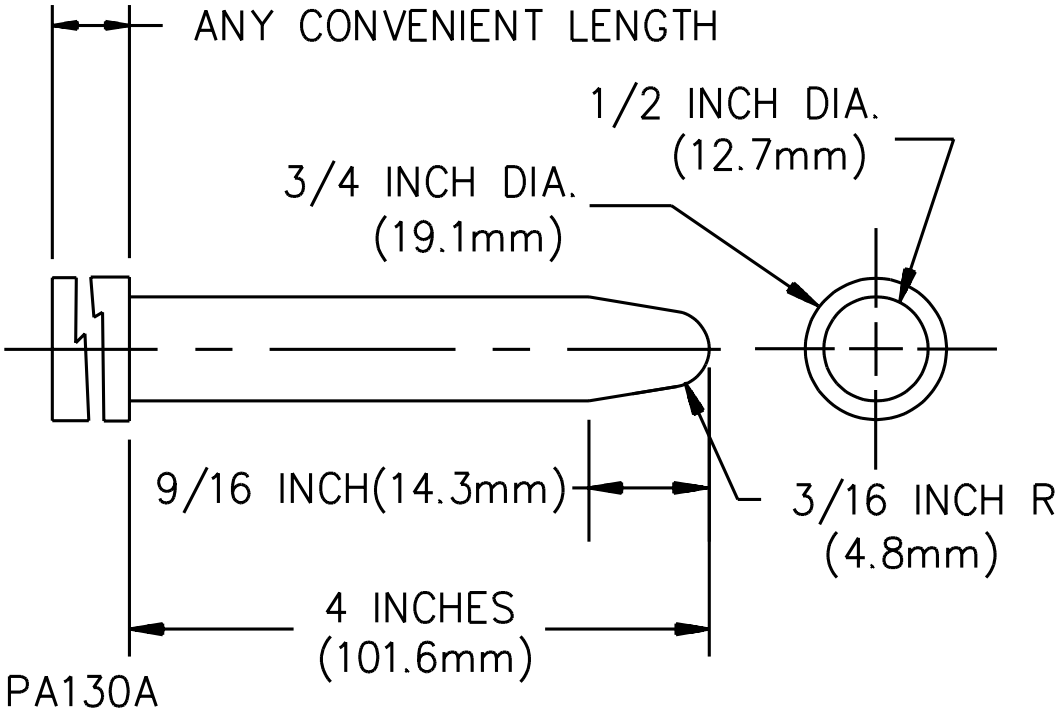


Documents
Document Sharing Hub
Full document details: UL 122 2001

**Figure 7.3**
**Probe No. 3**

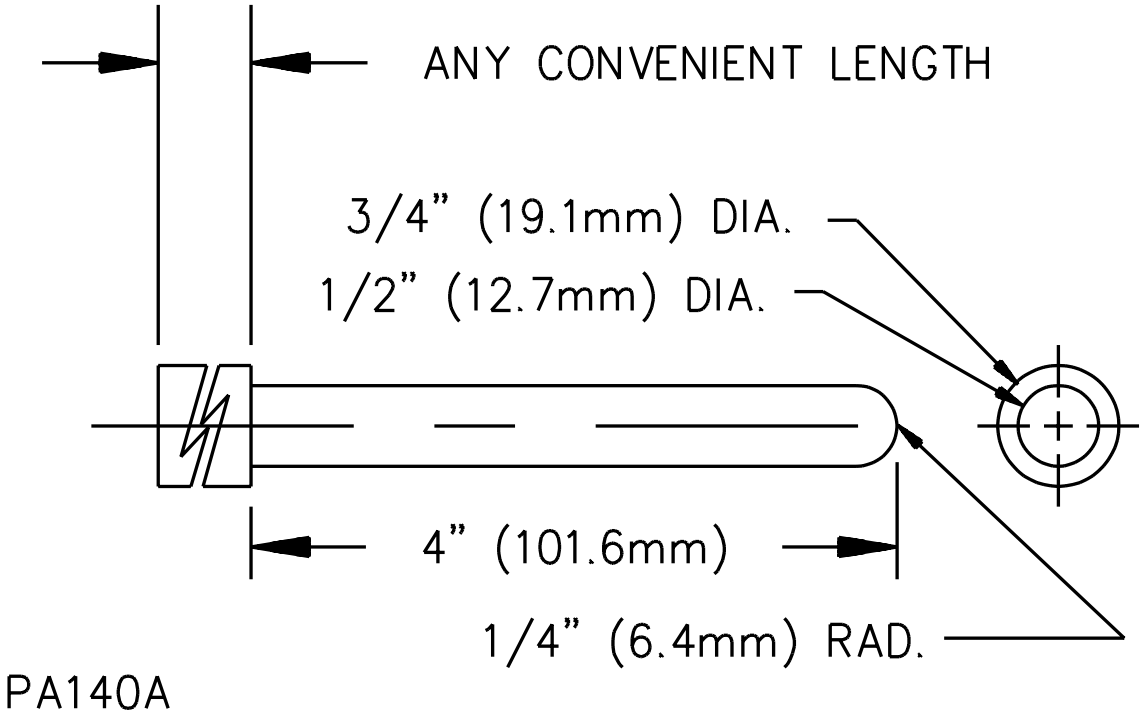


**Figure 7.4**
**Articulate probe**

Figure 7.4 revised April 9, 1999

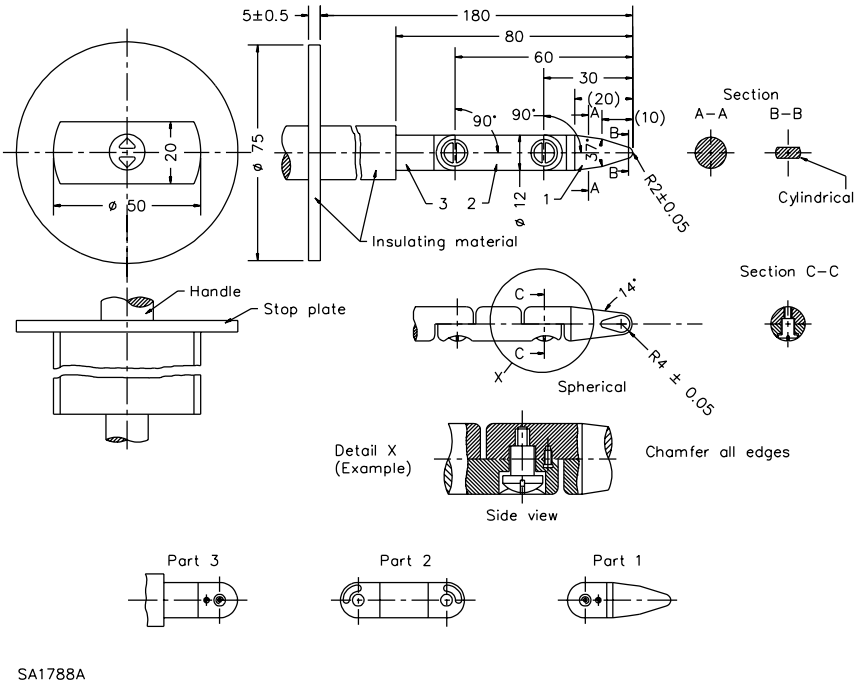


Documents
Document Sharing Hub
Full document details: UL 122 2001

7.1.9 If the instructions indicate the use of a tool for the user to remove some portion of the enclosure to perform a function, then that portion of the enclosure is to be opened or removed to evaluate the accessibility of live parts.

Added 7.1.9 effective April 9, 2000

7.1.10 With reference to the requirements in 7.1.2 and 7.1.3, insulated brush caps are not required to be additionally enclosed.

7.1.11 If an interlock is provided to reduce the risk of contact with parts involving a risk of electric shock, the interlock shall comply with the requirements in Marking, Section 44.

**7.2 Pin terminals**

7.2.1 Pin terminals that involve a risk of electric shock shall be guarded or recessed to reduce the risk of a pin from being contacted unintentionally by persons while the cord-connector or plug is fully seated or is being removed from or placed on the pins. The guard or recess is to be evaluated as described in 7.2.2 and 7.2.3.

7.2.2 With no plug or cord-connector on the pins, a straightedge placed in any position across and in contact with the guard or recess shall not touch any pin.

7.2.3 With the contact openings in the cord-connector aligned with the pins, and with the face of the plug or connector located in the plane perpendicular to the end of the farthest projecting pin, it shall not be possible by means of a probe, illustrated in Figure 7.1 to touch any pin.

7.2.4 The plug specified in 7.2.1 is to be either:

a) A standard flatiron or appliance plug if the pins on the appliance are of standard flatiron- or appliance-plug configuration or

b) The plug supplied with the appliance, if the pins on the appliance are not of a standard flatiron- or appliance-plug configuration.

**8 Mechanical Assembly**

8.1 An appliance shall be assembled so that it will not be affected adversely by vibration during its intended operation.

8.2 Properly tightened screws, with or without a lock washer, and staked and upset screws are considered not subject to loosening.

8.3 A switch, fuseholder, lampholder, attachment-plug receptacle, motor-attachment plug, or similar device, shall be securely mounted and prevented from turning or shifting in position, if such motion results in a reduction of spacings below the applicable values specified in Spacings, Section 30.

*Exception: A switch or lampholder is not required to be mounted as specified if they comply with the requirements in 8.4 and 8.5.*

8.4 The requirement that a switch be prevented from turning may be waived if all four of the following conditions are met:

a) The switch is of a plunger, slide, or other type that does not tend to rotate when operated. A toggle switch is considered to be subject to forces that tend to turn the switch during intended operation of the switch.

Documents
Document Sharing Hub
Full document details: UL 122 2001

b) The means of mounting the switch makes it unlikely that operation of the switch will loosen the switch.

c) Spacings are not reduced below the applicable values if the switch rotates.

d) Intended operation of the switch is by mechanical means rather than by direct contact by persons.

8.5 A lampholder of a type in which the lamp cannot be replaced – such as a neon pilot or an indicator light in which the lamp is sealed in a nonrenewable jewel – is not required to be prevented from turning if:

a) Rotation does not reduce spacings below the applicable values and

b) Such rotation does not cause stress to be transmitted to terminal connections.

8.6 Means for preventing the turning described in 8.3 shall consist of more than friction between surfaces – for example, a lock washer, properly applied, is acceptable as a means to prevent turning of a device having a single-hole mounting means.

## 9 Protection Against Corrosion

9.1 Iron and steel parts shall be protected against corrosion or damage from chemicals, such as fixing solution, by painting, galvanizing, plating, or other equivalent means if the breakdown of such unprotected parts would be likely to result in a risk of fire, electric shock, or injury to persons during the intended operation of the appliance.

*Exception No. 1: In certain equipment where the oxidation of steel is not likely to be accelerated due to the exposure of metal to air, moisture, and other oxidizing influence – thickness of metal and temperature also being factors – surfaces of sheet steel in an enclosure may not be required to be protected against corrosion.*

*Exception No. 2: Cast iron parts, bearings, laminations, and minor parts of iron or steel, such as washers and screws, are not required to be protected against corrosion.*

## 10 Power Supply Connections

### 10.1 Cord-connected appliances

10.1.1 Cords and plugs

10.1.1.1 A cord-connected appliance shall be provided with a length of flexible cord and an attachment plug for connection to a power-supply circuit. The flexible cord shall:

a) Be either attached permanently to the appliance or be in the form of a separate cord set with means for connection to the appliance;

b) Be Type SJ, SJE, SJT, or harder service cord for commercial appliances;

*Exception: A commercial appliance that is intended to be moved frequently may be supplied with Type SP-2, SPE-2, SPT-2, SV, SVE, or SVT cord.*

Documents
Document Sharing Hub
Full document details: UL 122 2001

c) Be Type SP-2, SPE-2, SPT-2, SV, SVE, SVT, or harder service cord for household appliances; and

d) Have a current and voltage rating not less than that of the appliance.

10.1.1.1 revised April 9, 1999

10.1.1.2 A cord shall be oil-resistant if the equipment is likely to be subjected to grease or oil.

10.1.1.3 The length of the power-supply cord is to be measured from the face of the attachment plug to the point where the cord emerges from the appliance. The length of:

a) Type SP-2, SPE-2, SPT-2, SV, SVE, or SVT cord shall be 6 – 12 feet (1.83 – 3.66 m) for a household appliance and 6 – 10 feet (1.83 – 3.05 m) for a commercial appliance and

b) Type SJ, SJE, SJT, or harder service cord shall not be less than 6 feet (1.83 m) long.

*Exception: Photoflash/power-supply combinations may be provided with a power-supply cord not less than 18 inches (457 mm) long if the total length of the power-supply cord plus the interconnecting cord to the photoflash enclosure is not less than 6 feet. See Table 14.1.*

10.1.1.4 The voltage and current ratings of the attachment plug shall not be less than those of the appliance. The current rating of the attachment plug – and of the cord-connector if a cord set is used – of an appliance rated more than 15 A shall not be less than 125 percent of the current rating of the appliance if the load will constitute a continuous load – 3 hours or more.

*Exception: A 20-A attachment plug and cord-connector are acceptable for an appliance rated not more than 4000 watts at 240 V.*

10.1.1.5 The attachment plug of the power-supply cord of an appliance provided with a 15- or 20-A general-use receptacle shall be of the 3-wire grounding type.

Added 10.1.1.5 effective April 9, 2000

10.1.1.6 The attachment plug of the power-supply cord of an appliance provided with either a manually operated, line-connected, single-pole switch for an appliance on/off operation, or an Edison-base lampholder shall be of the 2-wire polarized or 3-wire grounding type.

Added 10.1.1.6 effective April 9, 2000

10.1.1.7 If a 3-wire grounding-type attachment plug or a 2-wire polarized attachment plug is provided, the attachment plug connections shall comply with Figure 10.1 and the polarity identification of the flexible cord shall comply with Table 10.1.

Added 10.1.1.7 effective April 9, 2000

10.1.1.8 The conductor of the power-supply cord that is intended to be grounded shall have the following items connected to it: the screw shell of an Edison-base lampholder and the terminal or lead of a receptacle intended to be grounded. Table 10.1 identifies the supply cord conductor intended to be grounded.

Added 10.1.1.8 effective April 9, 2000

Documents
Document Sharing Hub

Full document details: UL 122 2001

**Figure 10.1**
**Connection to attachment plugs**

Added Figure 10.1 effective April 9, 2000

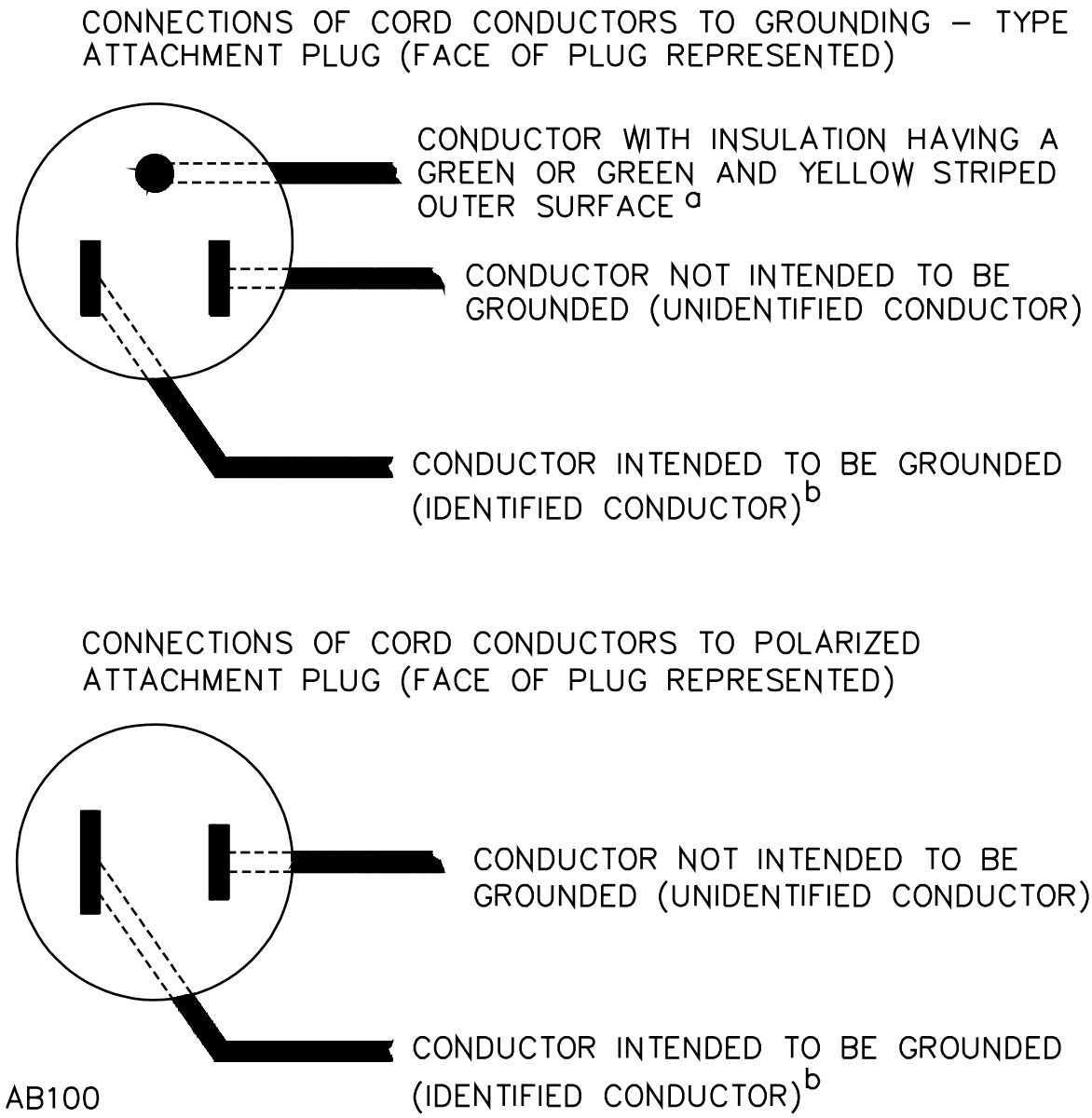


[a] The blade to which the green conductor is connected may have a U-shaped or circular cross section.

[b] Signifies a conductor identified in accordance with Table 10.1.

Documents
Document Sharing Hub
Full document details: UL 122 2001

**Table 10.1**
**Polarity identification of flexible cords**

Added Table 10.1 effective April 9, 2000

| Method of identification | | Acceptable combinations | |
|---|---|---|---|
| | | Wire intended to be grounded[a] | All other wires[a] |
| Color of braids on individual conductors | A | Solid white or natural gray – without tracer | Solid color other than white or natural gray – without tracer |
| | B | Color other than white or natural gray, with tracer in braid | Solid color other than white or natural gray – without tracer |
| Color of insulation on individual conductors | C[b] | Solid white or natural gray | Solid color other than white or natural gray |
| | C1[c] | Light blue | Solid color other than light blue, white, or natural gray |
| Color of separators | D[d] | White or natural gray | Color other than white or natural gray |
| Other means | E[e] | Tin or other white metal on all strands of the conductor | No tin or other white metal on the strands of the conductor |
| | F[d] | A stripe, ridge, or groove on the exterior surface of the cord | |

[a] A wire finished to show a green color with or without one or more yellow stripes or tracers is to be used only as an equipment grounding conductor. See 10.1.1.9 and Figure 10.1.
[b] Only for cords – other than Types SP-1, SP-2, and SPT-1 – having no braid on any individual conductor.
[c] For jacketed cord.
[d] Only for Types SP-1, SP-2, SPT-1, and SPT-2 cords.
[e] Only for Types SPT-1 and SPT-2 cords.

10.1.1.9 If a polarized attachment plug is used, a fuseholder, a single pole overcurrent protective device other than an automatic control without a marked off position, the center contact of an Edison-base lampholder, an interlock and a single pole manual on-off switch with a marked off position shall be connected to the ungrounded side of the line when used in the primary circuit.

*Exception: An appliance intended for 120-volt operation may have both sides of the line fused if required to comply with a federal specification for shipboard usage.*

10.1.1.10 The attachment plug provided with a dual-rated appliance shall be acceptable for the voltage that the appliance is intended to be connected when shipped from the factory. The supply cord – and the cord-connector if a cord set is used – shall have a voltage rating and ampacity acceptable for operation at all available voltage settings. See 66.2.1.

10.1.1.11 A household appliance intended for use with a detachable cord set shall not be provided with pin terminals that accommodate a standard flatiron or appliance plug, but may be provided with a specific-purpose flatiron or appliance plug. See 7.2.1 – 7.2.4.

Documents
Document Sharing Hub
Full document details: UL 122 2001

10.1.1.12 Only one supply circuit shall be provided to connect an appliance to the primary circuit power.

*Exception: More than one supply circuit may be provided if:*

*a) More than one voltage or kind of power is required – for example, 3-phase and 1-phase, regulated and unregulated, AC and DC;*

*b) The function of the unit is intended to be extended or reduced at a later date; or*

*c) Redundant power supply sources are necessary.*

10.1.1.13 If more than one supply cord is provided on an appliance, the construction shall be such that disconnection of any one power-supply cord will automatically de-energize all circuits within the appliance.

*Exception No. 1: A cord that remains connected, a terminal strip or circuit breaker, if used, and a part of a unit on the line side of a disconnect device may remain energized if they are enclosed or otherwise protected against unintentional contact by service personnel performing service functions not involving these parts.*

*Exception No. 2: If a legible and durable marking is provided at the main disconnect device for each primary-circuit-power source clearly indicating the number of power-supply sources for the unit and providing complete instructions for disconnecting all power circuits that involve a risk of electric shock. See 67.1.3.*

10.1.2 Strain relief

10.1.2.1 The power-supply cord shall be attached to the appliance so that a mechanical strain applied on the cord leaving the overall enclosure in accordance with the Strain Relief Test, Section 59, cannot:

a) Be transmitted to terminals, splices, or internal wiring;

b) Separate an interlock connector from the part of the appliance to which it is attached; and

c) Damage an interlock so that it does not perform its intended function.

10.1.3 Push-back relief

10.1.3.1 Means shall be provided to prevent the flexible cord from being pushed into the appliance through the cord-entry hole if such displacement can result in:

a) Mechanical damage to the cord;

b) Exposure of the cord to a temperature higher than that for which it is intended;

c) Reduction of spacings – such as to a metal strain relief attachment – below the applicable values; or

d) Stress on an internal wiring connection. See the Cord and Cable Push-Back Relief Test, Section 60.

10.1.3.1 revised April 9, 1999

Documents
Document Sharing Hub
Full document details: UL 122 2001

10.1.4 Bushings

10.1.4.1 At a point where a flexible cord passes through an opening in a wall, a barrier, or an enclosing case, there shall be a bushing or the equivalent that shall be secured in place, and shall have a smooth, rounded surface against which the cord may bear. An insulating bushing shall be provided if:

a) Type SP-2, SPE-2, SPT-2, or other cord not having a jacket is employed;

b) The wall or barrier is of metal; or

c) The construction is such that the cord may be subjected to stress or motion.

10.1.4.2 If the hole through which the cord passes is in porcelain, phenolic composition, or similar nonconducting material, a smooth, well-rounded surface is considered equivalent to a bushing.

10.1.4.3 Ceramic materials and some molded compositions, such as phenolic, nylon, polyethylene, and the like, are generally acceptable for insulating bushings, but a bushing of wood is not acceptable.

10.1.4.4 Vulcanized fiber may be employed for a bushing that is not less than 3/64 inch (1.2 mm) thick and is formed and secured in place so that it will not be affected adversely by moisture, as determined by testing in accordance with 59.2.

10.1.4.5 A bushing of the same material and molded integrally with the power-supply cord is acceptable on a Type SP-2 or harder service cord if the built-up section is not less than 1/16 inch (1.6 mm) thick at the point where the cord passes through the enclosure.

10.1.4.6 An insulated metal grommet may be accepted in place of an insulating bushing if the insulating material used is not less than 1/32 inch (0.8 mm) thick and completely fills the space between the grommet and the metal in which the grommet is mounted.

**10.2 Permanently-connected appliances**

10.2.1 General

10.2.1.1 An appliance intended for permanent connection to the power supply shall have provision for connection of one of the wiring systems in accordance with the National Electrical Code, ANSI/NFPA 70.

*Exception: An appliance in which the fastening means and mechanical connections are intended to permit frequent removal for interchange, maintenance, or repair may be provided with 2 – 8 feet (0.6 – 2.44 m) of Type S, SO, ST, or STO cord terminating in an attachment plug.*

10.2.1.2 A terminal box or compartment in which power-supply connections to a permanently-connected appliance are intended to be made shall be located so that these connections may be readily inspected after the appliance is installed as intended.

10.2.1.3 Wiring space or other compartments intended to enclose wires shall be free of any sharp edge, burr, fin, moving part, or similar hazard, that can damage the conductor insulation.

10.2.1.4 A terminal compartment intended for connection of a supply raceway shall be attached to the appliance so as to be prevented from turning.

Documents
Document Sharing Hub
Full document details: UL 122 2001

10.2.2 Wiring terminals and leads

10.2.2.1 A permanently-connected appliance shall be provided with leads or wiring terminals for the connection of conductors having an ampacity, in accordance with the National Electrical Code, ANSI/NFPA 70, acceptable for the appliance.

10.2.2.2 A terminal solely for connection of an equipment-grounding conductor shall be capable of securing a conductor of the size acceptable for the particular application, in accordance with the National Electrical Code, ANSI/NFPA 70.

10.2.2.3 A wiring terminal shall be provided with a soldering lug or pressure terminal connector securely fastened in place; for example, firmly bolted or held by a screw.

*Exception: A wire-binding screw may be employed at a wiring terminal intended to accommodate a No. 8 AWG (8.4 mm$^2$) or smaller conductor if upturned lugs or the equivalent are provided to hold the wire in position.*

10.2.2.4 A wiring terminal shall be prevented from turning.

10.2.2.5 The free length of a lead inside an outlet box or wiring compartment shall be 6 inches (152 mm) or more if the lead is intended for field connection to an external circuit.

*Exception: The lead may be less than 6 inches long if it is evident that the use of the longer lead might result in a risk of fire or electric shock.*

10.2.2.6 A lead intended for the connection of an equipment-grounding conductor shall not be smaller than the supply conductors.

10.2.3 Wire-binding screws

10.2.3.1 A wire-binding screw at a wiring terminal shall not be smaller than No. 10.

*Exception: A No. 8 screw may be used at a terminal intended only for the connection of a No. 14 AWG (2.1 mm$^2$) conductor, and a No. 6 screw may be used for the connection of a No. 16 AWG (1.3 mm$^2$) or No. 18 AWG (0.82 mm$^2$) conductor. See 10.2.3.4.*

10.2.3.2 It should be noted that, according to the National Electrical Code, ANSI/NFPA 70, No. 14 AWG (2.1 mm$^2$) is the smallest conductor that may be used for branch-circuit wiring, and thus is the smallest conductor that may be anticipated at a terminal for connection of a power-supply wire.

10.2.3.3 A wire-binding screw shall thread into metal. A terminal plate tapped for a wire-binding screw shall be metal not less than 0.050 inch (1.27 mm) thick and shall not have less than two full threads in the metal.

*Exception: An alloy plate not less than 0.030 inch (0.76 mm) thick may be used if the tapped threads have acceptable mechanical strength.*

10.2.3.4 A terminal plate formed from stock having the required thickness, as specified in 10.2.3.3 may have the metal extruded at the tapped hole to provide two full threads for the binding screw.

10.2.3.5 Upturned lugs or a cupped washer shall be capable of retaining a supply conductor of the size indicated in 10.2.2.1 under the head of the screw or washer.

Documents
Document Sharing Hub
Full document details: UL 122 2001

10.2.4 Identification

10.2.4.1 A permanently-connected appliance rated 125 V; or 125/250 V, 3-wire, or less; and employing an Edison-base lampholder, or a single-pole switch or overcurrent-protective device rather than an automatic control without a marked off position, shall have one terminal or lead identified for the connection of the grounded conductor of the supply circuit. The terminal or lead intended to be grounded shall be the one that is electrically connected to the screw shell of a lampholder and to which no switch or overcurrent protective device of the single-pole type other than an automatic control without a marked off position is connected.

10.2.4.2 A terminal intended for the connection of a grounded supply conductor shall either:

a) Be made of, or plated with, metal that is substantially white in color and shall be readily distinguishable from the other terminal or

b) Have proper identification clearly shown in some other manner, such as on attached wiring diagram.

10.2.4.3 A lead intended for the connection of a grounded power-supply conductor shall be finished to show a white or natural gray color and shall be readily distinguishable from the other leads.

10.2.4.4 The surface of an insulated lead intended solely for the connection of an equipment-grounding conductor shall be green with or without one or more yellow stripes, and no other lead shall be so identified.

10.2.4.5 A wire-binding screw intended for the connection of an equipment-grounding conductor shall have a green-colored head that is either hexagonal, slotted, or both. A pressure terminal connector intended for connection of such a conductor shall be plainly identified, such as by being marked ″G,″ ″GR,″ ″GND,″ ″Ground,″ or the like, or by a marking on a wiring diagram provided on the appliance.

## 11 Current-Carrying Parts

11.1 A current-carrying part shall be of silver, copper, a copper-base alloy, stainless steel, aluminum, or equivalent material.

*Exception No. 1: Plated steel may be used for a secondary-circuit part; for some primary-circuit parts, such as a solder terminal and a capacitor terminal where a glass-to-metal seal is necessary; and for a lead or a threaded stud of a semiconductor device.*

*Exception No. 2: Blued steel or steel with equivalent resistance to corrosion is acceptable for the current-carrying contact arms of mechanically or magnetically operated leaf switches and within a motor and its governor – including the motor terminals – but not elsewhere.*

## 12 Internal Wiring

### 12.1 Mechanical protection

12.1.1 The wiring and connections between parts within an appliance shall be protected or enclosed.

12.1.2 Wiring is considered to be acceptably protected if it cannot be touched by the probe illustrated in Figure 7.3 for a commercial appliance, and the probe illustrated in Figure 7.1 for a household appliance, when the appliance is assembled as intended for normal operation or transport.

Documents
Document Sharing Hub
Full document details: UL 122 2001

12.1.3 Internal wiring, including wires within an enclosure, a compartment, a raceway, or a similar part or housing, shall be routed and secured so that neither it nor related electrical connections are likely to be subjected to stress or mechanical damage resulting from contact with a rough, sharp, or moving part.

12.1.4 If user-servicing involves moving an assembly that has a wiring connection to another part of the appliance:

a) Any wiring – other than an acceptable flexible cord – that involves a risk of electric shock and that may be handled during such servicing shall have supplementary insulation consisting of two thicknesses of tape or a length of 1/64 inch (0.4 mm) thick tubing or

b) The appliance construction shall be such that the circuits are not energized during the servicing operation.

12.1.5 Wiring shall be located and secured so that during a user servicing operation, that involves removal and replacement of an object, contact with the wiring by the object or by the user is not likely.

12.1.6 If metal clamps and guides are used for routing stationary internal wiring, auxiliary nonconducting mechanical protection shall be provided where pressure is exerted on a conductor having thermoplastic insulation and no overall braid.

**12.2 Types of wire**

12.2.1 The internal wiring of an appliance shall consists of wires that are of a type or types having a flame-retardant rating (VW-1) and that are acceptable for the particular application, considered with regard to their exposure to oil or grease, and with regard to the temperature, voltage, and other conditions of service to which the wiring is likely to be subjected.

*Exception No. 1: Wiring used in low-voltage, limited-energy circuits are not required to be rated VW-1.*

*Exception No. 2: An integral lead of a component is not required to be rated VW-1.*

12.2.1 revised April 9, 1999

12.2.2 A conductor utilizing beads for insulation shall not be employed outside an enclosure.

**12.3 Splices and connections**

12.3.1 Each splice and connection shall be mechanically secure and shall provide reliable electrical contact. A soldered connection shall be made mechanically secure before being soldered if breaking or loosening of the connection may result in a risk of fire, electric shock, or injury to persons during intended operation of the appliance. Consideration shall be given to vibration, and similar movement, when evaluating the acceptability of electrical connections.

12.3.2 A lead is considered to be mechanically secure at a soldered connection if one or more of the following conditions are met:

a) There is at least one full wrap around a terminal.

b) Other than as specified in (c), there is at least one right-angle bend where the lead passes through an eyelet or opening.

c) On a printed-wiring board, components are properly inserted and soldered.

d) The lead is twisted with other conductors.

Documents
Document Sharing Hub
Full document details: UL 122 2001

12.3.3 Tack soldering – placing a lead along a flat surface and soldering it – is not acceptable unless it can be demonstrated that a risk of fire, electric shock, or injury to persons during intended operation of the appliance does not exist with the lead detached.

12.3.4 A splice shall be provided with insulation equivalent to that of the wires involved if permanence of spacing between the splice and other metal parts is not maintained.

12.3.5 Insulation consisting of two layers of friction tape, or two layers of thermoplastic tape, or of one layer of friction tape wrapped over one layer of rubber tape is acceptable on a splice. In determining whether splice insulation consisting of coated-fabric, thermoplastic, or another type of tubing is acceptable, consideration shall be given to such factors as its dielectric properties, heat- and moisture-resistant characteristics, and similar characteristics. Thermoplastic tape wrapped over a sharp edge is not acceptable.

12.3.6 Stranded internal wiring terminations shall be made so that looser strands of wire are prevented from contacting other uninsulated live parts that are not always of the same polarity as the wire, and from contacting dead metal parts. This may be accomplished by use of a pressure terminal connector, a soldering lug, a crimped eyelet, soldering all strands of the wire together, or other means.

12.3.7 An aluminum conductor, insulated or uninsulated, used for internal wiring, such as for interconnection between current-carrying parts or as motor windings, shall be terminated at each end by a method acceptable for the combination of metals involved at the connection point.

12.3.8 With reference to 12.3.7, if a wire-binding screw construction, or a pressure terminal connector is used as a terminating device, it shall be acceptable for use with aluminum under the conditions involved; for example, temperature, heat cycling or vibration.

## 13 Grounding and Bonding

### 13.1 Grounding

13.1.1 Provision for grounding shall be provided for an appliance:

a) Intended to be used on a power-supply circuit operating at more than 150 V to ground. See 21.2.7.

b) Intended for use in a theater or motion picture studio.

*Exception: A double-insulated, cord-connected appliance is not required to be grounded.*

c) Involving the use of water in its operation.

d) Intended to be permanently connected.

13.1.2 If a means for grounding is provided on an appliance – even if it is not required by 13.1.1 – it shall comply with the requirements in 13.1.3 – 13.2.4 and Resistance of Grounding Circuit, Section 46.

13.1.3 The means for grounding shall be:

a) An equipment grounding conductor in the cord of a cord-connected appliance or

Documents
Document Sharing Hub
Full document details: UL 122 2001

b) A field-wiring terminal or pigtail lead provided in the equipment intended for permanent connection.

Revised 13.1.3 effective April 9, 2000

13.1.4 An equipment grounding conductor of a flexible cord shall be:

a) Finished to show a green color with or without one or more yellow stripes; and

b) Connected to the grounding member of an acceptable attachment plug having a fixed grounding contact.

13.1.5 The equipment grounding terminal or lead grounding point shall be connected to the frame or enclosure by a positive means, such as by a bolted or screwed connection. The grounding connection shall penetrate nonconductive coatings, such as paint or vitreous enamel. The grounding point shall be located so that it is unlikely that the grounding means will be removed during servicing not involving the grounding connection.

13.1.6 The securing means specified in 13.1.5 shall be of corrosion-resistant metal, such as stainless steel, or shall be protected against corrosion in a manner that will not inhibit electrical conductivity between the screw and any other conductor. If a screw is used, a lock washer or an equivalent means shall be employed to prevent the screw from becoming loosened by vibration.

13.1.7 If two or more appliances are electrically or mechanically connected to one another and one of them is grounded, each unit of the system that has a separate power-supply cord shall have a grounding conductor in the cord. If the appliances are interconnected electrically and one of them is grounded, they shall be bonded together; for example, by means of a discrete conductor included in an interconnecting cable. The size of the grounding conductor shall be at least the size of the supply conductors.

13.1.8 If a grounding means is provided on an appliance, all exposed dead metal parts and all dead metal parts within the enclosure that are exposed to contact during operator servicing and likely to become energized shall be connected to the grounding means.

13.1.9 The size of discrete conductors used for grounding shall be determined by the rating of the overcurrent protective device of the branch circuit to which the equipment will be connected. The size of the wiring to components mounted on or near the dead metal parts likely to become energized shall be in accordance with the table for Minimum Size Equipment Grounding Conductors for Grounding Raceway and Equipment in the National Electrical Code, ANSI/NFPA 70, but not smaller than No. 14 AWG (2.1 $mm^2$).

*Exception: A conductor smaller than that specified in the NEC table may be used if the grounding connection does not open when tested as described in 46.3.*

Revised 13.1.9 effective April 9, 2000

13.1.10 All conductive parts that are accessible to service personnel and that are usually expected to be at ground potential (rubber-cushion-mounted motors, electronic chassis, and the like) but are likely to become energized by a single fault condition from a circuit involving risk of electric shock shall be connected to the grounding means, or a marking in accordance with 67.11.1 shall be provided.

Documents
Document Sharing Hub
Full document details: UL 122 2001

13.1.11 With reference to the requirements in 13.1.8, the following dead metal parts are not considered likely to become energized:

a) A small metal part – such as an adhesive-attached foil marking, a screw, a handle, or the like – that is on the exterior of the enclosure and separated from all electrical components by grounded metal or electrically isolated from all electrical components;

b) A panel or a cover that is isolated from all electrical components by a barrier of vulcanized fiber, varnished cloth, phenolic composition, or other moisture-resistant insulating material not less than 1/32 inch (0.8 mm) thick;

c) A panel or a cover that does not enclose uninsulated live parts and is electrically isolated from other electrical components; and

d) A core and an assembly screw of a relay, a solenoid, or similar device.

**13.2 Bonding**

13.2.1 An appliance employing an enclosure of insulating material, either wholly or in part, shall have a bonding means that provides continuity of grounding between all conduit openings. The bonding means may be either completely assembled to the appliance or provided as separate parts for field installation. An appliance intended for field assembly of the bonding means shall be provided with complete instructions for proper installation. The instructions shall identify the parts involved and the proper method of installing them.

13.2.2 The continuity of the conduit system shall be a metal-to-metal contact not relying on the insulating-material enclosure in any manner other than as provided in 13.2.3. Bonding between the parts of the conduit system at all places where conduit may be connected shall be evaluated with the insulation material in place or removed. Tests are to be conducted at any ambient temperature within the range of 10 – 40°C (50 – 104°F).

13.2.3 With reference to 13.2.2, if the continuity of the grounding system relies on the integrity of a polymeric material, various samples shall be subjected to:

a) Creep tests conducted at various oven-conditioning temperatures and

b) Overcurrent tests conducted at 200 percent of the rated current of the branch-circuit-protective device.

13.2.4 Discrete conductors used for bonding shall equal or exceed the size of the wiring to components mounted on or near the dead metal parts likely to become energized.

*Exception: A conductor smaller than that specified in the table for Minimum Size Equipment Grounding Conductors for Grounding Raceway and Equipment in the National Electrical Code, ANSI/NFPA 70, may be used if the bonding connection does not open when tested as described in 46.3.*

Added 13.2.4 effective April 9, 2000

Documents
Document Sharing Hub

Full document details: UL 122 2001

## 14 Interconnecting Cords and Cables

14.1 A flexible-cord or cable assembly used for external connections between sections of an appliance or between appliances shall be equivalent to, or acceptable for harder service than the power-supply cord.

*Exception No. 1: Type SV, SVE, SVT, SP-2, SPE-2, or SPT-2 flexible cord may be used for the connection of a remote control of a slide projector or a similar appliance if the cord is not longer than 12 feet (3.7 m).*

*Exception No. 2: Interconnecting cable for photoflash equipment shall be as specified in Table 14.1. An equivalent or harder cord may be used.*

*Exception No. 3: Cords or cables in low-voltage, limited-energy circuits are not required to comply.*

**Table 14.1**
**Interconnecting cables for photo-flash equipment**

Table 14.1 revised April 9, 1999

| Power supply[a] | Use | Voltage (rms) | Maximum length, feet | Cable type |
|---|---|---|---|---|
| Isolated | Commercial or household | 600 or less | No limit | SJ, SJE, SJT |
| Isolated | Commercial | 600 or less | 5[b] | SP-2, SPE-2, SPT-2, SV, SVE, SVT |
| Isolated | Household | 600 or less | 12[c] | SP-2, SPE-2, SPT-2, SV, SVE, SVT |
| Isolated | Commercial or household | More than 600[d] | No limit | S, SE, SO, ST |
| Isolated | Commercial or household | More than 600[d] | 5[b] | SJ, SJE, SJT |
| Battery pack | Commercial or household | 600 or less | 5[b] | SP-2, SPT-2, SV, SVE, SVT |
| Directly connected | Commercial | 300 or less[e] | No limit | SJ, SJE, SJT |
| Directly connected | Household | 300 or less[e] | 12[c] | SP-2, SPE, SPT-2, SV, SVE, SVT |

[a] An isolated power supply is one that employs a transformer provided with a separate primary winding connected to the alternating-current power-supply circuit, and electrically isolated from all other windings.
[b] This 5-foot (1.52-m) limit normally prevents the cord from resting on the floor. Coiled cords or other constructions that are longer than 5 feet but are not likely to contact the floor are acceptable.
[c] This 12-foot (3.7-m) limit applies to portable photo-flash equipment that is intended to be directly or indirectly mounted – shoe or accessory bracket – to a camera. The 12-foot limit is measured between the face of the attachment plug and the cord entry hole on the flash enclosure. Accordingly, the maximum length may consist of the interconnecting cable only between a plug-in power supply and the flash enclosure or any combined lengths of the power-supply cord and the interconnecting cable.
[d] See 55.4.1 for dielectric voltage-withstand test.
[e] The voltage limit of 300 volts rms (424 volts peak) applies between conductors and between any conductor and earth ground.

Documents
Document Sharing Hub
Full document details: UL 122 2001