UL 1310

Underwriters Laboratories Inc.

Standard for Safety

Class 2 Power Units

AVA Documents
Document Sharing Hub

Full document details: UL 1310 2009

Documents
Document Sharing Hub

Full document details: UL 1310 2009

Underwriters Laboratories Inc. (UL)
333 Pfingsten Road
Northbrook, IL 60062-2096

UL Standard for Safety for Class 2 Power Units, UL 1310

Fifth Edition, Dated May 3, 2005

Revisions: This Standard contains revisions through and including July 20, 2009.

Summary of Topics

This revision to ANSI/UL 1310 is being issued as an editorial correction to Table 33.1 due to a publication error on revision pages dated July 3, 2009.

Text that has been changed in any manner is marked with a vertical line in the margin. Changes in requirements are marked with a vertical line in the margin and are followed by an effective date note indicating the date of publication or the date on which the changed requirement becomes effective.

The revisions dated July 20, 2009 include a reprinted title page (page1) for this Standard.

As indicated on the title page (page 1), this UL Standard for Safety is an American National Standard. Attention is directed to the note on the title page of this Standard outlining the procedures to be followed to retain the approved text of this ANSI/UL Standard.

The UL Foreword is no longer located within the UL Standard. For information concerning the use and application of the requirements contained in this Standard, the current version of the UL Foreword is located on ULStandardsInfoNet at: http://ulstandardsinfonet.ul.com/ulforeword.html

The master for this Standard at UL's Northbrook Office is the official document insofar as it relates to a UL service and the compliance of a product with respect to the requirements for that product and service, or if there are questions regarding the accuracy of this Standard.

UL's Standards for Safety are copyrighted by UL. Neither a printed copy of a Standard, nor the distribution diskette for a Standard-on-Diskette and the file for the Standard on the distribution diskette should be altered in any way. All of UL's Standards and all copyrights, ownerships, and rights regarding those Standards shall remain the sole and exclusive property of UL.

All rights reserved. No part of this publication may be reproduced, stored in a retrieval system, or transmitted in any form by any means, electronic, mechanical photocopying, recording, or otherwise without prior permission of UL.

Revisions of UL Standards for Safety are issued from time to time. A UL Standard for Safety is current only if it incorporates the most recently adopted revisions.

UL provides this Standard ″as is″ without warranty of any kind, either expressed or implied, including but not limited to, the implied warranties of merchantability or fitness for any purpose.

In no event will UL be liable for any special, incidental, consequential, indirect or similar damages, including loss of profits, lost savings, loss of data, or any other damages arising out of the use of or the inability to use this Standard, even if UL or an authorized UL representative has been advised of the possibility of such damage. In no event shall UL's liability for any damage ever exceed the price paid for this Standard, regardless of the form of the claim.

Documents
Document Sharing Hub

Full document details: UL 1310 2009

UL will attempt to answer support requests concerning electronic versions of its Standards. However, this support service is offered on a reasonable efforts basis only, and UL may not be able to resolve every support request. UL supports the electronic versions of its Standards only if they are used under the conditions and operating systems for which it is intended. UL's support policies may change from time-to-time without notification.

UL reserves the right to change the format, presentation, file types and formats, delivery methods and formats, and the like of both its printed and electronic Standards without prior notice.

Purchasers of the electronic versions of UL's Standards for Safety agree to defend, indemnify, and hold UL harmless from and against any loss, expense, liability, damage, claim, or judgement (including reasonable attorney's fees) resulting from any error or deviation introduced while purchaser is storing an electronic Standard on the purchaser's computer system.

If a single-user version electronic Standard was purchased, one copy of this Standard may be stored on the hard disk of a single personal computer, or on a single LAN file-server or the permanent storage device of a multiple-user computer in such a manner that this Standard may only be accessed by one user at a time and for which there is no possibility of multiple concurrent access.

If a multiple-user version electronic Standard was purchased, one copy of the Standard may be stored on a single LAN file-server, or on the permanent storage device of a multiple-user computer, or on an Intranet server. The number of concurrent users shall not exceed the number of users authorized.

Electronic Standards are intended for on-line use, such as for viewing the requirements of a Standard, conducting a word search, and the like. Only one copy of the Standard may be printed from each single-user version of an electronic Standard. Only one copy of the Standard may be printed for each authorized user of a multiple-user version of an electronic Standard. Because of differences in the computer/software/printer setup used by UL and those of electronic Standards purchasers, the printed copy obtained by a purchaser may not look exactly like the on-line screen view or the printed Standard.

An employee of an organization purchasing a UL Standard can make a copy of the page or pages being viewed for their own fair and/or practical internal use.

The requirements in this Standard are now in effect, except for those paragraphs, sections, tables, figures, and/or other elements of the Standard having future effective dates as indicated in the note following the affected item. The prior text for requirements that have been revised and that have a future effective date are located after the Standard, and are preceded by a ″SUPERSEDED REQUIREMENTS″ notice.

New product submittals made prior to a specified future effective date will be judged under all of the requirements in this Standard including those requirements with a specified future effective date, unless the applicant specifically requests that the product be judged under the current requirements. However, if the applicant elects this option, it should be noted that compliance with all the requirements in this Standard will be required as a condition of continued Listing, Recognition, and Follow-Up Services after the effective date, and understanding of this should be signified in writing.

Copyright © 2009 Underwriters Laboratories Inc.

Documents
Document Sharing Hub

Full document details: UL 1310 2009

This Standard consists of pages dated as shown in the following checklist:

Page	Date
1	July 20, 2009
2-3	July 17, 2008
4-6B	July 3, 2009
7-8B	July 17, 2008
9-13	May 3, 2005
14	July 3, 2009
15-22	May 3, 2005
23	July 3, 2009
24-25	July 17, 2008
26	May 3, 2005
27	July 17, 2008
28	July 3, 2009
29-35	May 3, 2005
36	July 17, 2008
37-39	May 3, 2005
40-42	July 3, 2009
43-45	May 3, 2005
46	July 3, 2009
47-48	May 3, 2005
49	July 17, 2008
50	July 20, 2009
50A-50B	July 3, 2009
51-56	May 3, 2005
57-58B	July 3, 2009
59-63	May 3, 2005
64	July 3, 2009
65-66	May 3, 2005
67-68B	July 17, 2008
69-70	May 3, 2005
71-72	July 17, 2008
73	May 3, 2005
74	July 17, 2008
75	May 3, 2005
76	July 17, 2008
77-80	May 3, 2005
81	July 17, 2008
82-88	May 3, 2005
89	July 17, 2008
90-93	May 3, 2005
94	July 3, 2009
A1-A2	July 17, 2008

Documents
Document Sharing Hub

Full document details: UL 1310 2009

No Text on This Page

Documents
Document Sharing Hub

Full document details: UL 1310 2009

MAY 3, 2005
(Title Page Reprinted: July 20, 2009)

ANSI/UL 1310-2009

UL 1310

Standard for Class 2 Power Units

The first and second edition were titled Standard for Direct Plug-In Transformer Units.

First Edition – May, 1981
Second Edition – September, 1986
Third Edition – August, 1992
Fourth Edition – July, 1994

Fifth Edition

May 3, 2005

This ANSI/UL Standard for Safety consists of the Fifth Edition including revisions through July 20, 2009.

The most recent designation of ANSI/UL 1310 as an American National Standard (ANSI) occurred on May 28, 2009. ANSI approval for a standard does not include the Cover Page, Transmittal Pages, Title Page, or effective date information.

Comments or proposals for revisions on any part of the Standard may be submitted to UL at any time. Proposals should be submitted via a Proposal Request in UL's On-Line Collaborative Standards Development System (CSDS) at http://csds.ul.com.

UL's Standards for Safety are copyrighted by UL. Neither a printed nor electronic copy of a Standard should be altered in any way. All of UL's Standards and all copyrights, ownerships, and rights regarding those Standards shall remain the sole and exclusive property of UL.

COPYRIGHT © 2009 UNDERWRITERS LABORATORIES INC.

Documents
Document Sharing Hub

Full document details: UL 1310 2009

No Text on This Page

Documents
Document Sharing Hub

Full document details: UL 1310 2009

CONTENTS

INTRODUCTION

1 Scope 6
2 Glossary 7
3 Components 8A
4 Units of Measurement 9
5 Undated References 9
6 Terminology 9

CONSTRUCTION

7 Mechanical Assembly 9
8 Enclosure 16
9 Protection Against Corrosion 17
10 Switches 17
11 Protective Devices 18
12 Components 19
13 Coil Insulation 20
13.1 General 20
13.2 Insulation for transformers 20
14 Input Connections 23
14.1 Direct plug-in units 23
14.2 Cord-connected units 24
14.3 DC input units 25
15 Output Connections 25
15.1 General 25
15.2 Output wiring 26
15.3 Output terminals 26
15.4 Output connectors 27
15.5 Bushings 28
16 Accessibility of Live Parts 28
16.1 General 28
16.2 Live parts other than exposed wiring terminals 31
16.3 Exposed wiring terminals 33
17 Live Parts 33
18 Strain Relief 34
19 Internal Wiring 34
20 Separation of Circuits 35
21 Insulating Materials 35
22 Printed Wiring Boards 35
23 Grounding 36
23.1 General 36
23.2 Bonding conductor 37
24 Spacings 37

Documents
Document Sharing Hub
Full document details: UL 1310 2009

PERFORMANCE

25 General 40
26 Leakage Current Test 43
27 Leakage Current Test and Dielectric Voltage Withstand Test After Humidity Exposure 45
28 Maximum Output Voltage Test 46
29 Maximum Input Test 46
30 Output Current and Power Test 46
30.1 General 46
30.2 Inherently limited 47
30.3 Not inherently limited 48
31 Calibration of Overcurrent Protection Devices Test 49
32 Full-Load Output Current Test 49
33 Normal Temperature Test 50
34 Dielectric Voltage Withstand Test 53
34.1 General 53
34.2 Induced potential 54
35 Endurance Test on Overcurrent- and Overtemperature-Protective Devices 54
36 Overload and Endurance Tests on Switches and Controls 55
37 Overload Test on Secondary Switches 55
38 Operation Test 56
39 Abnormal Tests 56
39.1 General 56
39.2 Output loading 57
39.2A Output loading – alternate method 58
39.3 Transformer burnout 58A
39.4 Reverse polarity 59
39.5 Switch position 59
39.6 Component breakdown 59
39.7 Printed wiring board abnormal operation test 60
39.8 Backfeed protection 60
40 Tests on Insulating Materials 61
41 Strain Relief Test 62
42 Push-Back Relief Test 63
43 Direct Plug-In Blade Secureness Test 63
44 Direct Plug-In Security of Input Contacts Test 63
44.1 General 63
44.2 Removable, folding, and retractable blade units 64
45 Security of Output Connectors Test 65
46 Abuse Tests 66
46.1 General 66
46.2 Impact on direct plug-in units 66
46.3 Impact on cord connected units 68
46.4 Rod pressure on direct plug-in units 68
46.5 Resistance to crushing on direct plug-in units 68
47 Bonding Conductor Test 68A

MANUFACTURING AND PRODUCTION TESTS

48 Dielectric Voltage Withstand Test 69
49 Grounding Continuity Test 70

Documents
Document Sharing Hub
Full document details: UL 1310 2009

RATING

50 General 71

MARKING

51 General 71
52 Cautionary Markings 73
53 Application of Labeling 75

INSTRUCTIONS

54 Instruction Manual 75

OUTDOOR USE

55 General 76
56 Enclosures 76
57 Protection Against Corrosion 77
58 Gaskets 80
59 Supply Connections 80
60 Output Connections and Wiring 81
61 Spacings 81
62 Accessibility of Live Parts 82
63 Ground-Fault Circuit-Interrupters 82
64 Performance 83
64.1 General 83
64.2 Abuse tests 83
64.3 Rain test 83
64.4 Standing water immersion test 87
65 Markings 87
66 Instructions 88

PERMANENTLY-CONNECTED UNITS

67 General 89
68 Construction 90
69 Wiring Terminals and Leads 91
70 Markings 92
71 Installation Instructions 93

POWER UNITS FOR INSTALLATION IN AIR-HANDLING SPACES

72 General 94
73 Marking 94

APPENDIX A

Standards for Components A1

Documents
Document Sharing Hub
Full document details: UL 1310 2009

INTRODUCTION

1 Scope

1.1 These requirements cover indoor and outdoor use Class 2 power supplies and battery chargers. These units utilize an isolating transformer and may incorporate components to provide an alternating- or direct-current output. Each output provides Class 2 power levels in accordance with the National Electrical Code, ANSI/NFPA 70. Maximum output voltage does not exceed 42.4 V peak for alternating current, 60 V for continuous direct current. These products are intended primarily to provide power to low voltage, electrically operated devices. These requirements apply to:

a) Portable and semipermanent mounted direct plug-in units provided with 15 A blade configurations for use on nominal 120 or 240 V alternating current branch circuits with a maximum potential of 150 V to ground;

b) Cord- and plug-connected units provided with a 15 or 20 A attachment plug configuration for use on nominal 120 or 240 V alternating current branch circuits with a maximum potential of 150 V to ground; and

c) Units permanently connected to the input supply for use on nominal 600 V or less alternating or direct current branch circuit.

Direct plug-in and cord-connected units may also be provided with a direct current input jack for being powered from a vehicle battery adapter.

1.1 revised July 3, 2009

1.2 These requirements cover direct plug-in and cord-connected products whose input power does not exceed 660 W under any possible condition of output loading.

1.2 revised July 3, 2009

1.3 These requirements do not cover the effect that a power unit may have on the equipment or system to which it is connected.

1.4 A product marked for a specific end-use (such as for use with audio-, radio-, or video-type equipment; medical or dental equipment; or tools) may be subject to additional requirements found in the applicable end-product standard. See 51.4.

1.5 These requirements do not cover products intended to charge batteries for starter motors used to start engines. Products of this type are covered by the Standard for Battery Chargers for Charging Engine-Starter Batteries, UL 1236.

1.6 These requirements cover Class 2 products, as defined in this standard, intended for use with toys. Products of this type shall also comply with the Standard for Toy Transformers, UL 697.

1.7 These requirements do not cover products with outputs other than Class 2, nor battery chargers intended to charge batteries employed in wheel chairs or similar types of mobility aids. Products of this type are covered by the Standard for Power Units Other Than Class 2, UL 1012.

Documents
Document Sharing Hub
Full document details: UL 1310 2009

1.8 Products without a rectifier may be covered by the Standard for Low Voltage Transformers – Part 1: General Requirements, UL 5085-1, and the Standard for Low Voltage Transformers – Part 3: Class 2 and Class 3 Transformers, UL 5085-3.

1.8 revised July 17, 2008

Documents
Document Sharing Hub

Full document details: UL 1310 2009

No Text on This Page

Documents
Document Sharing Hub

Full document details: UL 1310 2009

1.9 These requirements do not cover products powered solely by a dc source. Products of this type are covered by the Standard for Power Converters/Inverters and Power Converter/Inverter Systems for Land Vehicles and Marine Craft, UL 458, or by other requirements appropriate for the intended application.

1.10 These requirements do not cover products intended for supplying low voltage landscape lighting. Products of this type are covered by the Standard for Low Voltage Landscape Lighting Systems, UL 1838.

2 Glossary

2.1 For the purpose of this standard, the following definitions shall apply:

2.2 BONDING CONDUCTOR – A conductor by which dead metal parts are bonded (connected) to the grounding means.

2.3 CLASS 2 – A source having limited voltage and energy capacity. Requirements for voltage and energy capacity limitations are as indicated in this standard. See the Maximum Output Voltage Test, Section 28, and the Output Current and Power Test, Section 30.

2.4 CONDUCTIVELY CONNECTED – A part is conductively connected to another part if the current between the parts exceeds the limit for leakage current specified in Leakage Current Test, Section 26.

2.5 CONSECUTIVE BATTERY CHARGER – A battery charger whose charging cycle is completed in four hours or less.

2.6 DIRECT CURRENT (DC) – A voltage or current waveform where the instantaneous value does not vary.

2.7 ENCLOSURE – Any surface or surrounding structure that prevents access to a real or potential risk of electric shock or injury to persons.

2.8 ENERGY LIMITING CIRCUIT/ENERGY LIMITING IMPEDANCE – A circuit or component depended on to limit an output to Class 2 levels or to limit energy to an accessible part. Reliability of circuit components shall be determined unless the unit is tested as specified in 39.6.1.

2.9 INDOOR USE – Use in an indoor location or where wet contact is not likely to occur.

2.10 INJURY TO PERSONS – The words ″injury to persons″ are in reference to physical harm to persons other than the physiological effects of electric shock.

2.10.1 MULTIPLE VOLTAGE RATED POWER UNIT – A power unit with a rated voltage range (such as 100 – 240 volts) or a power unit with more than one discrete voltage rating (such as 120/240 volts).

2.10.1 added July 17, 2008

2.10.2 POWER UNIT INTENDED FOR USE BY TRAVELERS – A multiple voltage rated direct plug-in power unit with a 125 V 15 A (parallel) input blade configuration, or a multiple voltage rated cord-connected power unit with a non-detachable power supply cord terminating in a 125 V 15 A (parallel) blade plug.

2.10.2 added July 17, 2008

2.11 RISK OF ELECTRIC SHOCK – A risk of electric shock is considered to exist if:

a) The voltage between parts exceeds the value specified in 16.2.2, and

Documents
Document Sharing Hub
Full document details: UL 1310 2009

b) The current between the parts measured in the Leakage Current Test, Section 26, exceeds 0.5 mA.

2.12 TAB, INTEGRAL (including a mounting tab) – A molded on or otherwise mechanically secured tab provided as part of the enclosure. An integral tab is usually not provided as part of the required enclosure, but may be provided for compliance with certain requirements of this standard.

2.13 UNIT – For the purposes of this standard, a unit is either a direct plug-in unit, a cord connected unit, or a unit permanently connected to the input supply.

2.14 UNIT, CORD-CONNECTED – A power unit which employs a cord and plug assembly for connection to the branch circuit.

2.15 UNIT, DIRECT PLUG-IN – A power unit which employs a blade assembly on the enclosure for connection to the branch circuit.

2.16 UNIT, LINEAR DESIGN – A unit employing a branch circuit frequency transformer design where operation is not dependent on circuitry.

2.17 UNIT, PORTABLE – A unit other than a stationary unit or semipermanent mounted unit.

2.18 UNIT, SEMIPERMANENT MOUNTED – A direct plug-in unit provided with a mounting tab. For the purpose of this standard, semipermanent mounted units shall also comply with the requirements for portable units unless otherwise specified.

2.19 UNIT, STATIONARY – A cord- and plug-connected unit that is:

a) Intended to be fastened in place;

b) Intended to be located in a dedicated space; or

c) Not easily moved.

2.20 UNIT, SWITCH MODE DESIGN – A unit employing a high frequency transformer design where transformer operation is dependent on an inverter circuit.

2.21 WORKING VOLTAGE – The highest voltage to which the insulation under consideration is, or is able to be, subjected when the equipment is operating at its rated voltage under conditions of normal use.

Documents
Document Sharing Hub
Full document details: UL 1310 2009

3 Components

3.1 Except as indicated in 3.2, a component of a product covered by this standard shall comply with the requirements for that component. See Appendix A for a list of standards covering components used in the products covered by this standard.

3.2 A component is not required to comply with a specific requirement that:

a) Involves a feature or characteristic not required in the application of the component in the product covered by this standard, or

b) Is superseded by a requirement in this standard.

3.3 A component shall be used in accordance with its rating established for the intended conditions of use.

Documents
Document Sharing Hub

Full document details: UL 1310 2009

No Text on This Page

Documents
Document Sharing Hub

Full document details: UL 1310 2009

3.4 Specific components are incomplete in construction features or restricted in performance capabilities. Such components are intended for use only under limited conditions, such as certain temperatures not exceeding specified limits, and shall be used only under those specific conditions.

4 Units of Measurement

4.1 Values stated without parentheses are the requirement. Values in parentheses are explanatory or approximate information.

4.2 Unless otherwise stated, values of current and voltage are rms.

5 Undated References

5.1 Any undated reference to a code or standard appearing in the requirements of this standard shall be interpreted as referring to the latest edition of that code or standard.

6 Terminology

6.1 The term ″power unit″ as used in these requirements refers to all power supplies, battery chargers, and transformers covered by these requirements.

CONSTRUCTION

7 Mechanical Assembly

7.1 A unit shall be formed and assembled so that it has the strength and rigidity necessary to resist the abuses to which it is likely to be subjected, without producing or increasing a risk of fire, electric shock, or injury to persons due to total or partial collapse with resulting reduction of spacings, loosening or displacement of parts, or other serious defects. See also 46.1.1.

7.2 A unit shall have all parts reliably secured in place.

7.3 An enclosure, an opening, a frame, a guard, a knob, a handle, or the like shall not be sufficiently sharp to cause a risk of injury in normal maintenance or use.

7.4 A unit shall be constructed so that it is not necessary to open or remove the enclosure when the unit is used as intended.

7.5 Each lampholder, switch, and similar component shall be mounted securely and shall be prevented from turning by more than friction between surfaces. For example, the use of a lock washer is acceptable to prevent the turning of a device having a single hole mounting means.

Exception No. 1: A lampholder of a type in which the lamp cannot be replaced (such as a neon pilot or indicator light in which the lamp is sealed in by a nonremovable jewel) need not be prevented from turning if rotation cannot reduce spacings below the minimum acceptable values or produce stress on an electrical connection.

Exception No. 2: A switch or other similar component need not comply with this requirement if the turning of such a component and servicing of the part introduces no additional risk of fire or electric shock, such as reduced spacings below minimum acceptable values or stress on an electrical connection.

Documents
Document Sharing Hub
Full document details: UL 1310 2009

7.6 A replaceable lamp in a unit shall be wired in the secondary circuit, and shall be replaceable without opening the enclosure. There shall be no primary live part accessible to contact during lamp replacement.

7.7 A nonreplaceable pilot lamp, such as an indicating-type overload- or short-circuit protector, a neon light, or an indicator light, is one in which the lamp is sealed-in, such as by a nonremovable jewel.

7.8 A switch in the primary circuit or an overcurrent-protective device shall be located within the unit enclosure in such a manner as not to be accessible or exposed to tampering nor subject to damage during normal use. This requirement does not apply to the actuating means of a switch, except as noted in 7.10.

7.9 If the exterior part of the switch or control forms part of a unit enclosure, the part shall be subjected to the Abuse Tests, Section 46.

7.10 The requirements in 7.8 also apply to the actuating means – toggle, handle, or the like – if the dislodging of such part exposes live parts or film-coated magnet wire that can be contacted as specified in Accessibility of Live Parts, Section 16.

7.11 The maximum acceptable moment, center of gravity, dimensions, and weight of a direct plug-in unit shall comply with the following requirements (See 7.12):

a) The quotient of WY/Z shall not exceed 48 ounces (1361 g);

b) The quotient of WY/S shall not exceed 48 ounces (1361 g);

c) The product of WX shall not exceed 80 ounce-inches (0.56 N·m) for a unit not intended for use by travelers, and 36 ounce-inches (0.25 N·m) for a unit intended for use by travelers (see 14.1.4); and

d) The weight of a unit shall not exceed 28 ounces (794 g).

7.11 effective May 3, 2007

Where the definitions for the symbols are as follows:

W is the weight of the unit in ounces (g).

Y is the distance illustrated in Figure 7.1 in inches (mm).

Z is the lesser of the two distances, Z_1 or Z_2, as illustrated in Figure 7.1 in inches (mm).

S is the lesser of the two distances, S_1 or S_2, as illustrated in Figure 7.1 in inches (mm).

X is the greater of the two distances, X_1 or X_2, as illustrated in Figure 7.1 in inches (mm).

Documents
Document Sharing Hub
Full document details: UL 1310 2009

Figure 7.1
Dimensions of a direct plug-in unit

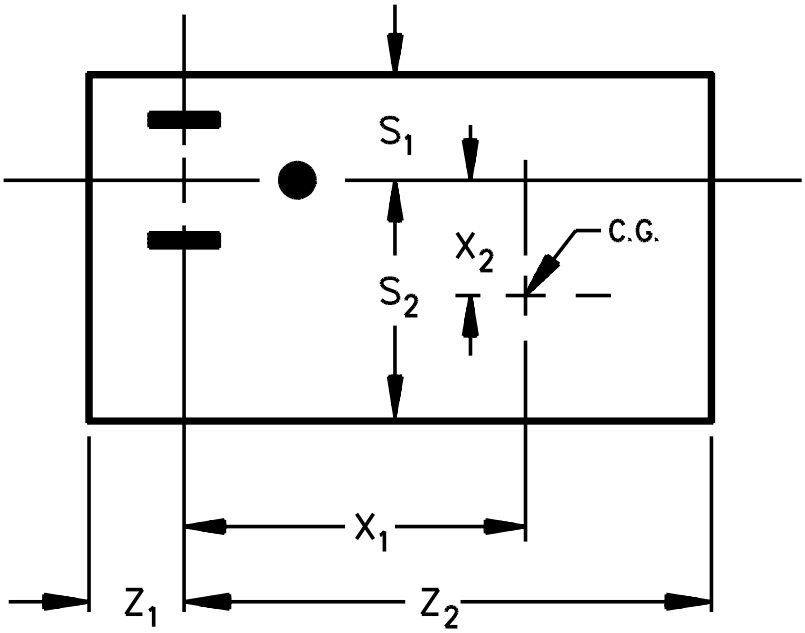

FRONT VIEW

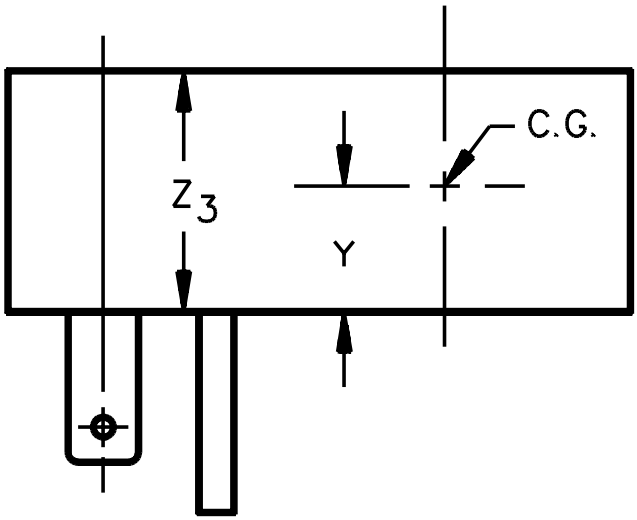

SIDE VIEW

C.G. = Center of Gravity

CP100

Documents
Document Sharing Hub
Full document details: UL 1310 2009

7.12 The moment and weight specified in 7.11 are to be determined as follows:

a) For units with an output cord, the cord is to be cut off at the enclosure, or at the strain-relief means if the strain-relief means is outside the enclosure.

b) For units with directly mounted accessories, the values are to be measured with the accessories in place.

c) An integral tab is not to be included in measurements of the linear dimensions for the purpose of determining moments unless:

1) The tab and enclosure withstand the impact described in 46.2.1 with one impact on the tab itself, without deformation; and

2) For a polymeric enclosed unit having an integral tab, the tab and enclosure do not distort at temperatures to which the material may be subjected under conditions of normal and abnormal use as determined by the mold stress relief distortion test in the Standard for Polymeric Materials – Use in Electrical Equipment Evaluations, UL 746C.

7.13 When inserted in a duplex receptacle, no part of a direct plug-in unit, including an integral tab or output wiring, shall interfere with full insertion of an attachment plug into the adjacent receptacle. See Figure 7.2 and Figure 7.3.

Exception: This requirement does not apply to a unit that renders the adjacent receptacle completely unusable in any one mounting position.

Documents
Document Sharing Hub

Full document details: UL 1310 2009

Figure 7.2
125V, 15A Duplex receptacle

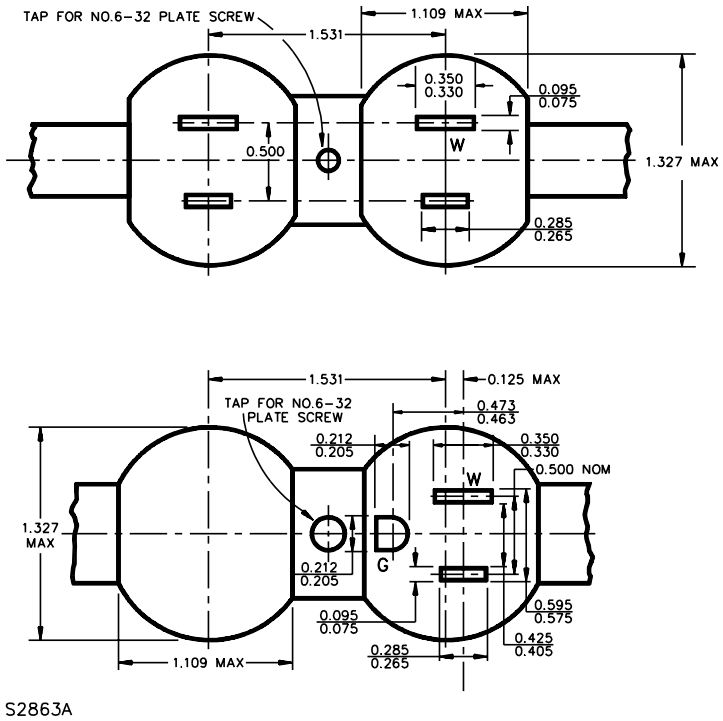

Figure 7.3
250V, 15A Duplex receptacle

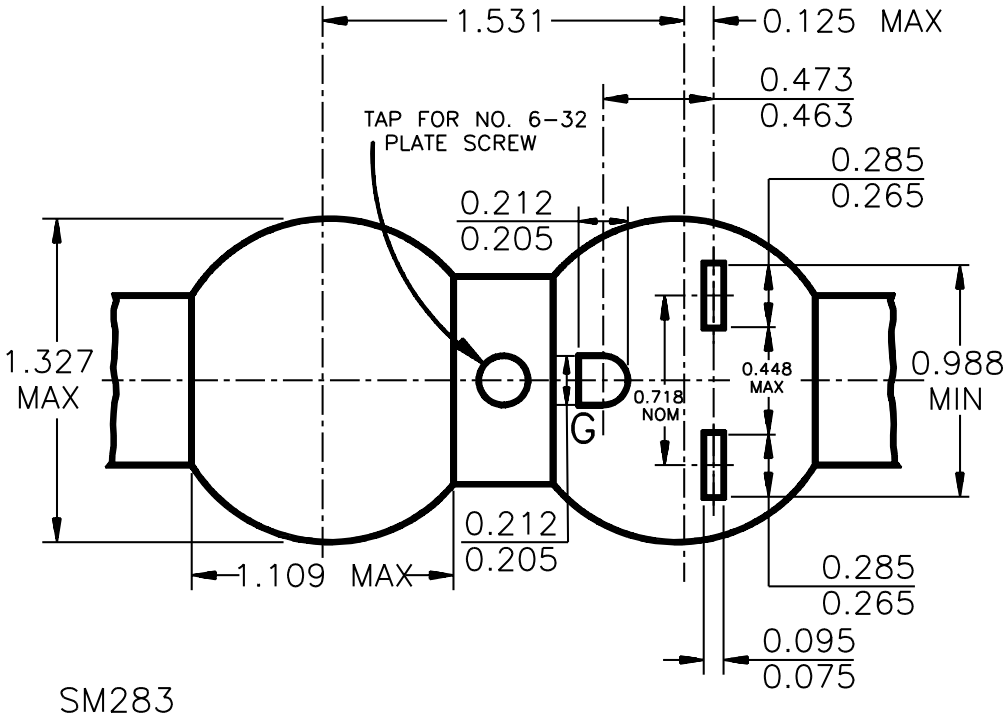

Documents
Document Sharing Hub
Full document details: UL 1310 2009

7.14 A portable cord-connected unit intended for wall mounting shall employ key hole slots or the equivalent as a mounting means.

7.15 A mounting tab shall not be provided with a direct plug-in unit unless all of the following conditions are met:

a) The unit is intended for use on a 15-ampere, 125- or 250-volt receptacle;

b) A screw is provided and constructed to secure the mounting tab of the unit to a duplex receptacle that has a center screw (see Figure 7.2);

c) For a unit without a grounding pin, the mounting tab is constructed so that the unit may be mounted to both grounding and nongrounding receptacles; and

d) The unit is marked as specified in 52.4.

7.16 The enclosure of a unit shall be capable of being gripped for removal from the receptacle to which it is connected, and the perimeter of the face section from which the blades project shall not be less than 0.20 inch (5.1 mm) from any point on either blade. In order to determine compliance with this requirement for units with rounded edges, the perimeter of the face section is considered to be the point at which the articulate probe is able to access as shown in Figure 7.5.

Exception: For products that are intended for use with children's toys, this distance shall be increased to 7.9 mm, as required in the Standard for Toy Transformers, UL 697. These products shall be marked "intended for use with children's toys," or an equivalent marking.

7.17 With reference to 7.16, for an extension from the face for mechanical support of the blades provided as shown in Figure 7.4, the point of measurement shall be determined by application of the articulate probe, Figure 16.2, as shown in Figure 7.5.

7.18 With reference to 7.16, for a direct plug-in unit employing removable blades for the input connectors, the measurement shall also be determined on the plug module while removed from the direct plug-in unit.

7.18 added July 3, 2009

Documents
Document Sharing Hub

Full document details: UL 1310 2009

Figure 7.4
Extension for mechanical support of blades

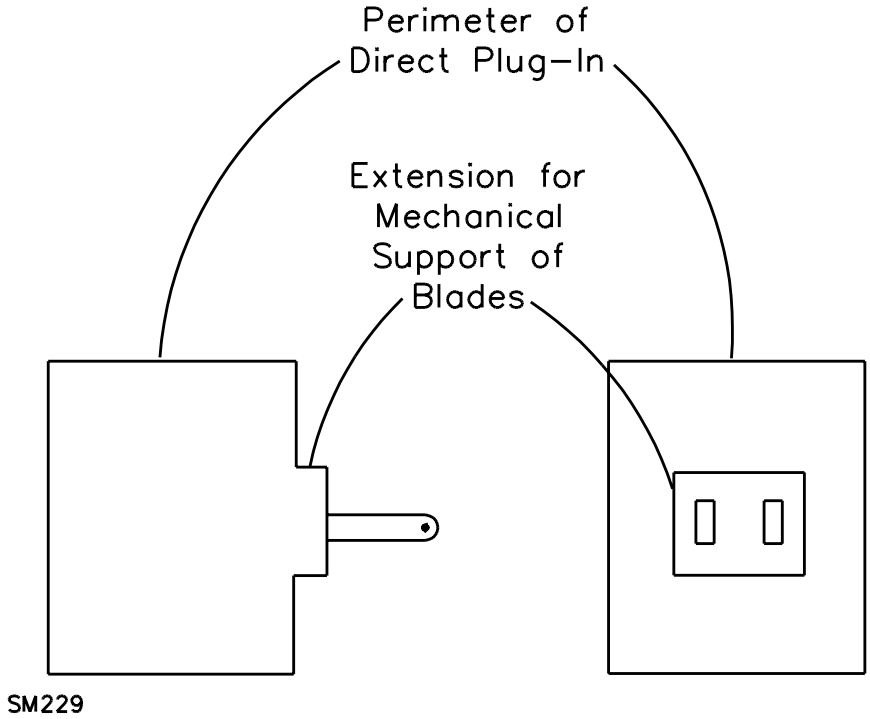

Figure 7.5
Determination of perimeter of units with rounded edges

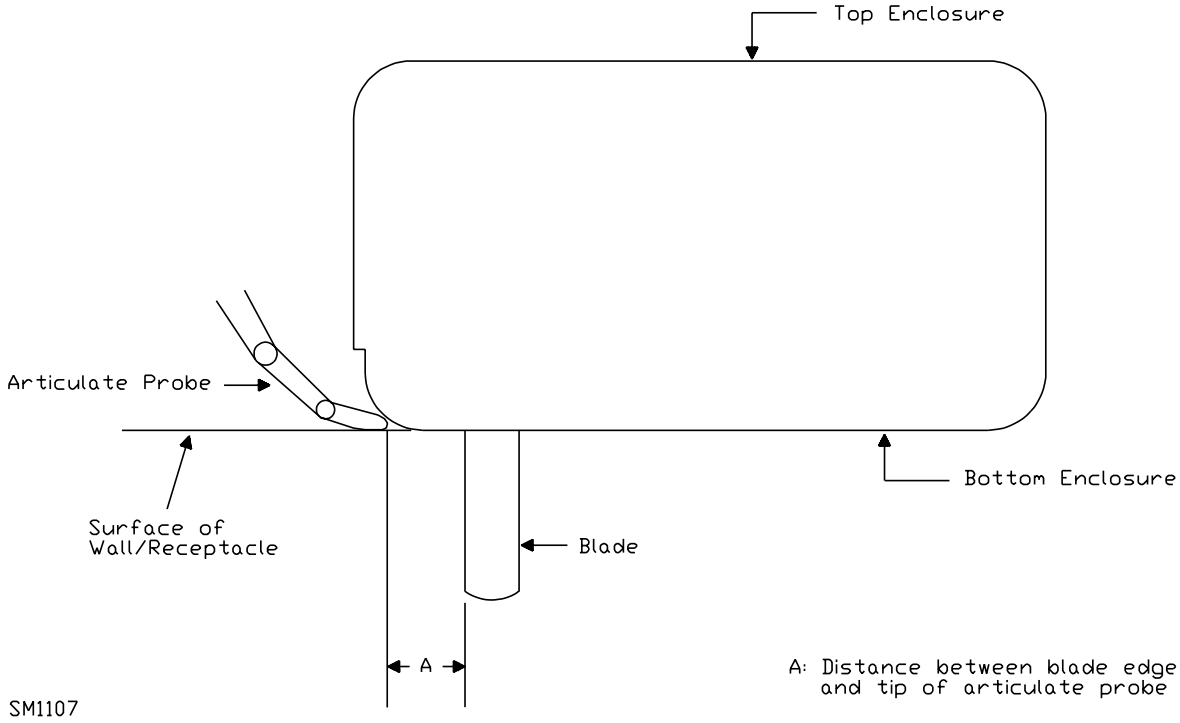

Documents
Document Sharing Hub
Full document details: UL 1310 2009

8 Enclosure

8.1 A unit shall be provided with an enclosure that shall house all current-carrying parts that pose a risk of electric shock. The enclosure shall have the strength and properties necessary to reduce the risk of mechanical damage to the various parts.

8.2 A unit shall have no openings larger than those complying with 16.2.1.

8.3 If an acceptable grade of vulcanized fiber is used as part of the enclosure for the support of secondary parts (terminals and the like) that do not present a risk of fire or electric shock, the amount of fiber shall not be more than is necessary to support the secondary parts in question. The fiber shall not be less than 1/32 inch (0.8 mm) thick and shall not introduce a risk of fire, electric shock, or injury to persons as a result of abuse. See 46.1.1.

8.4 An enclosure constructed of sheet metal shall be formed from stock having a thickness not less than that specified in Table 8.1. The thickness of enclosure sheet metal other than steel or aluminum shall not be less than that specified in Table 8.1 for uncoated steel and shall have the necessary strength and rigidity.

Exception: For transformers with end bells forming part of the enclosure, sheet steel having a thickness of not less than 0.020 inch (0.51 mm) if uncoated, or 0.023 inch (0.58 mm) if zinc coated, may be used if the drawn end bells have maximum dimensions of 2-1/4 inches (57.2 mm) on the flat portion and 1-1/2 inches (38.1 mm) at the base of the drawn portion.

Table 8.1
Minimum acceptable thickness of enclosure metal

Metal	At small, flat, unreinforced surfaces and at surfaces of a shape or size to provide adequate mechanical strength		At relatively large unreinforced flat surfaces	
	Inches	(mm)	Inches	(mm)
Die-cast	3/64	(1.2)	5/64	(2.0)
Cast malleable iron	1/16	(1.6)	3/32	(2.4)
Other cast metal	3/32	(2.4)	1/8	(3.2)
Uncoated sheet steel	0.026	(0.66)	0.026	(0.66)
Galvanized sheet steel	0.029	(0.74)	0.029	(0.74)
Nonferrous sheet metal other than copper	0.036	(0.91)	0.036	(0.91)
Copper	0.033	(0.84)	0.033	(0.84)

8.5 In addition to the performance tests specified in this Standard, the factors to be considered when evaluating a polymeric enclosure are:

a) Material Flammability properties;

b) Resistance to arcing properties; and

Documents
Document Sharing Hub
Full document details: UL 1310 2009

c) Moisture absorptive properties.

These properties shall comply with the requirements in the Standard for Polymeric Materials – Use in Electrical Equipment Evaluations, UL 746C. For the purpose of this requirement, a semipermanent mounted unit is to be considered a portable unit.

8.6 A conductive coating applied to a nonmetallic surface such as the inside surface of a cover, enclosure, and the like shall comply with the appropriate requirements in the Standard for Polymeric Materials – Use in Electrical Equipment Evaluations, UL 746C, unless it can be determined that flaking or peeling of the coating does not result in a reduction of spacings or the bridging of live parts that may result in a risk of fire, electric shock, or injury to persons.

8.7 An adhesive used in the assembly of the enclosure shall be investigated as specified in the Standard for Polymeric Materials – Use in Electrical Equipment Evaluations, UL 746C.

Exception: A method utilizing fusion techniques, such as solvent cementing, ultrasonic welding, electromagnetic induction, and thermal welding need not be investigated.

9 Protection Against Corrosion

9.1 Except as noted in 9.2, iron and steel parts shall be protected against corrosion by galvanizing, plating, enameling, or other equivalent means if the corrosion of such unprotected parts results in a risk of fire, electric shock, or injury to persons.

Exception: This requirement does not apply to a part made of stainless steel.

9.2 The requirement in 9.1 applies to all enclosing cases or to other parts upon which intended mechanical operation may depend. It does not apply to laminations and small minor parts of iron or steel, such as washers, screws, and bolts, that are not current carrying, if the corrosion of such unprotected parts would not result in a risk of fire, electric shock, or injury to persons, or result in the device not operating as intended.

10 Switches

10.1 The requirements in this Section apply to switches not in a Class 2 circuit, and to switches in a Class 2 circuit the breakdown of which electrically or mechanically is likely to introduce a risk of fire or electric shock.

10.2 A switch subjected to a temperature higher than 50°C (122°F) shall be evaluated with respect to the temperature limits of the materials used.

10.3 A switch shall be located and positioned so that it is not subject to mechanical damage during normal use or as a result of abuse. See 46.1.1.

10.4 Other than as indicated in 10.7 and 10.8, a switch or other control device shall be acceptable for the application and shall have current and voltage ratings not less than those of the load that it controls.

Documents
Document Sharing Hub
Full document details: UL 1310 2009

10.5 A primary circuit switch shall be connected to an ungrounded circuit conductor.

10.6 A primary circuit switch shall have a current rating not less than twice the normal current draw under normal load conditions, or the switch shall be investigated for the application in accordance with the Overload and Endurance Tests on Switches and Controls, Section 36.

10.7 A switch or other control device connected in the output circuit may be used if the device complies with the Normal Temperature Test and the Overload Test on Secondary Switches. See 33.1 and 37.1.

10.8 A switch or other controller not having an acceptable rating and located on a direct plug-in unit where it cannot be operated unless the unit is withdrawn from a receptacle may be used if it complies with the Operation Test, Section 38.

11 Protective Devices

11.1 A protective device built into a unit shall comply with the requirements for that component.

11.2 The protective device may be located in either the primary or secondary circuit.

11.3 Crossed or nicked (reduced) cross-section conductors shall not be employed as a protective device.

11.4 Protective devices mentioned in 11.1 include, but are not limited to, eutectic material, fuses, overtemperature and overcurrent protectors, thermal protectors, and similar devices intended to interrupt or limit the flow of current as a result of overload.

11.5 A thermostat, thermal cutoff, Positive Temperature Coeffecient (PTC) resistor, or Negative Temperature Coefficient (NTC) resistor incorporated in a unit shall not cause a risk of fire or electric shock due to improper application.

11.6 A manually reset thermostat shall be constructed so that automatic tripping of the thermostat is not prevented by any setting or position of the reset mechanism.

11.7 An automatically or manually reset protective device or a replaceable overcurrent-protective device shall not open when the unit is delivering its rated output. See the Normal Temperature Test, Section 33.

11.8 A primary circuit overcurrent protective device of the single-pole type, other than an automatic control without a marked ″off″ position, shall be connected to an ungrounded circuit conductor. See Exception No. 5 to 14.2.1.

11.9 When a single fuse is located in the primary circuit, it shall be connected to an ungrounded circuit conductor.

Exception: This requirement does not apply to a unit not intended to be serviced.

11.10 When both circuit conductors of a product intended for connection to a nominal 120 volt branch circuit are fused, the fuse in the grounded circuit conductor shall be rated not less than the fuse in the ungrounded circuit conductor. See 52.8.

Exception: This requirement does not apply to a unit not intended to be serviced.

Documents
Document Sharing Hub
Full document details: UL 1310 2009

11.11 A unit investigated for compliance with the energy limitations of 30.3.1 shall be provided with protection, such as a fuse or PTC, complying with the Calibration of Overcurrent Protection Devices Test, Section 31.

11.12 A protective device that is provided to comply with 11.11 shall not be of the automatic reclosing type, and shall not have automatic tripping prevented by any setting or position of the reset mechanism. When an accessible control of a manual reset protective device is held in the on or reset position, and the protective device is automatically tripped, the contact shall not automatically return to the closed position.

11.13 An overcurrent protective device shall be located inside the unit enclosure. The device shall be inaccessible to tampering.

Exception: A unit may be provided with an externally replaceable overcurrent protective device. If the device is relied upon for acceptable performance, the device shall not be interchangeable with a device having a higher current rating.

11.14 A fuse provided in the secondary circuit of a not inherently limiting Class 2 power unit shall be rated in accordance with Table 30.2.

12 Components

12.1 A component – a fixed resistor, Positive Temperature Coeffecient (PTC) or Negative Temperature Coefficient (NTC) resistor, diode, or the like – employed to limit (see 2.8) the output of a unit to within the required current or power levels, or otherwise used to obtain acceptable performance, shall have permanence and stability which does not decrease its limiting capacities. Among the factors considered when evaluating a limiting component are:

a) Effect of operating temperature;

b) Electrical stress level;

c) Effect of transient surges; and

d) Resistance to moisture.

12.2 There shall be no components connected between primary and output circuits which result in a conductive connection (see 2.4). If capacitive coupling is provided between primary and output circuits, it shall consist of either:

a) A capacitor complying with the antenna coupling requirements specified in the Standard for Capacitors and Suppressors for Radio- and Television-Type Appliances, UL 1414; or

b) Two capacitors connected in series, each capacitor complying with the requirements in 34.1.3.

Documents
Document Sharing Hub
Full document details: UL 1310 2009

13 Coil Insulation

13.1 General

13.1.1 A coil shall be provided with insulation between the coil and any dead metal part, and between each adjacent pair of windings.

Exception No. 1: Two or more secondary windings may be considered as a single winding and interposing insulation is not required, if, when interconnected, the windings comply with the performance requirements for a single winding.

Exception No. 2: Insulation is not required if the spacings required by 24.1 are provided.

13.1.2 Coil insulation, unless inherently moisture resistant, shall be treated to render it moisture resistant.

13.1.3 Film-coated magnet wire is considered to be moisture resistant.

13.2 Insulation for transformers

13.2.1 The insulation between uninsulated, primary wires of opposite polarity shall be one of the following:

a) Electrical grade paper, waxed or otherwise treated to resist the absorption of moisture, having a total thickness of not less than 0.012 inch (0.305 mm); or

b) Other insulating material having a dielectric breakdown strength of not less than 2500 volts in the thickness used as determined by the Tests on Insulating Materials, Section 40.

13.2.2 Insulation between the primary and secondary windings shall be one of the following (for additional requirements, see 13.2.3 and 13.2.4):

a) Electrical grade paper, waxed or otherwise treated to resist the absorption of moisture, having a total minimum thickness of 0.012 inch (0.305 mm).

b) A molded polymeric material such as a coil form or bobbin having a minimum thickness of 0.025 inch (0.64 mm).

c) Insulation – other than of a molded polymeric material – as specified in 13.2.1(b).

13.2.3 Tape used as insulation in lieu of spacings for a flanged bobbin wound transformer shall provide a continuous 1/32 inch (0.8 mm) minimum wide bent up edge against the bobbin flanges.

13.2.4 A flanged, bobbin-wound transformer shall be subjected to the output loading test described in 39.2. The test shall be continued for 15 days if the transformer has:

a) The primary winding wound over the secondary winding or the secondary winding wound over the primary winding; and

b) The primary winding insulated from the secondary winding by a layer of insulating material other than that specified in 13.2.2(b).

Exception: The test is not required to be applied for 15 days if the following requirements are met:

Documents
Document Sharing Hub
Full document details: UL 1310 2009

a) Multiple layered winding wire is used, which has been evaluated to the requirements for miscellaneous insulating devices and materials of the Standard for Polymeric Materials – Short Term Property Evaluations, UL 746A, the Standard for Polymeric Materials – Long Term Property Evaluations, UL 746B, and the Standard forPolymeric Materials – Use in Electrical Equipment Evaluations, UL 746C;

b) The spacing requirements of Table 24.1 and Table 24.2 are met;

c) The requirements in the Standard for Insulation Coordination Including Clearances and Creepage Distances for Electrical Equipment, UL 840, are met, along with the use of additional securement of the winding, and a Comparative Tracking Index (CTI) rating of 100 for all insulating material is determined; or

d) Insulated wiring is used which has been evaluated to the Outline of Investigation for Special Transformer Winding Wire, Subject 2353.

13.2.5 Insulation between the primary winding and the core shall be one of the following:

a) Electrical grade paper, waxed or otherwise treated to resist moisture, having a minimum total thickness of 0.012 inch (0.305 mm).

b) A molded polymeric material such as a coil form or bobbin having a minimum thickness of 0.025 inch (0.64 mm).

c) Insulation – other than of a molded polymeric material – as specified in 13.2.1(b).

Exception: Insulation may be reduced or waived between the primary and core when all of the following conditions are met:

a) The core is of a low electrical conductance material, for example ferrite used in switch-mode product;

b) The core is treated as a live and electrically conductive part when judging insulation and spacings between the core and:

i) Accessible metal parts;

ii) The secondary windings; and

iii) Any other output circuitry.

c) In applying (b), the core shall be considered to be at the maximum potential of the primary winding; and

d) Insulation between secondary windings and core are in accordance with 13.2.5.

Documents
Document Sharing Hub
Full document details: UL 1310 2009

13.2.6 Insulation between the primary winding lead connections and a metallic enclosure shall be one of the following:

a) Electrical grade paper, waxed or otherwise treated to resist the absorption of moisture, not less than 0.012 inch (0.305 mm) thick if used in conjunction with an air spacing of one-half that specified in 24.1.

b) Electrical grade paper, waxed or otherwise treated to resist the absorption of moisture having a total thickness of not less than 0.028 inch (0.71 mm) when the insulation is in contact with the enclosure.

c) Insulation having a dielectric breakdown strength of not less than 2500 volts in the thickness used for (a) and 5000 volts in the thickness used for (b) as determined by Tests on Insulating Materials, Section 40.

13.2.7 Insulation in accordance with 13.2.8 shall be provided between a crossover lead and:

a) The turns of the winding to which it is connected,

b) The adjacent winding;

c) The metallic enclosure; and

d) The core.

13.2.8 To comply with 13.2.7, insulation shall be one of the following:

a) Electrical grade paper, waxed or otherwise treated to resist the absorption of moisture, having a total thickness of not less than 0.012 inch (0.305 mm); or

b) Insulation as specified in 13.2.1(b).

Exception No. 1: Any type or thickness of insulation, or a through air spacing less than specified in 24.1, between a crossover lead and the winding to which it is connected may be used if either:

a) The coil withstands the dielectric voltage withstand test described in 34.1.1 and 34.1.2 with the potential applied between the coil leads and with the coil lead cut at the point where it enters the inner layer; or

b) The coil withstands the induced potential test described in 34.2.1 – 34.2.3. See 13.2.9.

Exception No. 2: This requirement does not apply to insulation between a Class 2 secondary crossover lead and:

a) The secondary winding to which the crossover lead is connected;

b) The metallic enclosure; and

c) The core.

Documents
Document Sharing Hub
Full document details: UL 1310 2009

13.2.9 With reference to Exception No. 1 to 13.2.8, the magnet coil of a molded bobbin transformer having a slot for the crossover or start lead – unspliced at the windings – is acceptable as crossover lead insulation if:

a) The slots provide a graduated through air spacing to the winding, increasing to the end turns; and

b) The magnet-coil winding withstands the induced potential test described in 34.2.1 – 34.2.3 or the dielectric voltage withstand test described in 34.1.1 and 34.1.2.

13.2.10 Insulation between the primary-lead connections and the adjacent winding, and between secondary-lead connections and the primary winding shall be one of the following:

a) Electrical grade paper, waxed or otherwise treated to resist the absorption of moisture, having a total thickness of not less than 0.028 inch (0.71 mm); or

b) Other insulating material having a dielectric breakdown strength of not less than 5000 volts in the thickness used as determined by Tests on Insulating Materials, Section 40.

14 Input Connections

14.1 Direct plug-in units

14.1.1 The integral blade assembly of direct plug-in units shall comply with the construction requirements in the Standard for Attachment Plugs and Receptacles, UL 498, and Wiring Devices – Dimensional Specifications, ANSI/NEMA WD6. See 7.16 and 7.17.

14.1.1 revised July 17, 2008

14.1.2 If a direct plug-in unit employs a manually operated line connected single-pole switch or a fuse with an accessible contact, it shall employ a polarized- or grounding-type blade assembly.

14.1.3 If a direct plug-in unit employs removable, folding or retractable blades for the input connectors, it shall comply with the requirements specified in Section 44, Direct Plug-in Security of Input Contacts Test.

14.1.3 revised July 3, 2009

14.1.4 A power unit intended for use by travelers shall comply with (a) – (e):

a) The blade assembly shall be a 125 volt, 15 amp configuration;

b) The power unit shall employ a user adjustable voltage selector and comply with 39.5.1, or be capable of operating at different voltages without user adjustment;

c) The input voltage rating shall include nominal 120 volt;

d) The power unit shall be marked as specified in 51.8; and

e) The power unit shall be provided with instructions as specified in 54.4.

14.1.4 revised July 17, 2008

Documents
Document Sharing Hub
Full document details: UL 1310 2009

14.2 Cord-connected units

14.2.1 A portable or stationary unit shall be provided with a flexible cord in accordance with Table 14.1 and an attachment plug for connection to the branch circuit. The blade assembly for connection to the branch circuit shall be of the polarized- or grounding-type. The length of cord external to the unit and including the attachment plug shall not be less than 6 feet (1.8 m) as measured from the face of the attachment plug to the point of attachment or entry.

Exception No. 1: A unit weighing 1 pound (454 g) or less is acceptable if the total length of the input and output cords is 6 feet or more, and the length of the input cord is at least 3 feet (0.91 m).

Exception No. 2: A stationary power unit intended to be fastened in place may require a form of supply connection that facilitates the interchange of equipment to maintain continuous service or otherwise meet special conditions of use. For such service, a Type S, SE, or equivalent flexible cord may be employed and may be of a length appropriate for the purpose, but no longer than 10 feet (3 m). Normally, a 2 foot (610 mm) length of cord will be sufficient for the plug and the receptacle connection.

Exception No. 3: A power unit marked in accordance with 51.7 and provided with instructions in accordance with 54.3 is not required to be provided with the detachable power supply cord.

Exception No. 4: If a power unit is intended for use in a country other than the U.S.A, the detachable power supply cord shall comply with the requirements of the country of destination.

Exception No. 5: For products that do not require a discharge path, a cord connected unit is not required to be supplied with a polarized plug when it does not include any single pole switches or fuseholders with accessible contacts.

Table 14.1
Acceptable flexible cords for cord connected power units

Table 14.1 revised July 17, 2008

Flexible cord type	Maximum length, feet (m)
At least as serviceable as SP-2, SPE-2, SPT-2, SV, SVE, SVT	10 (3)
At least as serviceable as S, SE, SO, SP-3, SPT-3, ST, STO, SJ, SJE, SJO, SJT, SJTO	Not specified

14.2.2 If a unit with a permanently attached power supply cord can be adapted for use on two or more different voltages by field alteration of internal connections, the attachment plug provided with the unit shall be of a type required for the voltage and current for which the unit is connected when shipped from the factory.

14.2.3 If a multiple voltage rated power unit is intended for use with a detachable power supply cord, the cord shall be provided with the unit if either of the following apply:

a) The power unit is provided with an operator adjustable voltage selector and complies with 39.5.1; or

b) The power unit is capable of operating at different voltages without user adjustment.

The power unit shall be provided with instructions in accordance with 54.1 and 54.2.

Documents
Document Sharing Hub
Full document details: UL 1310 2009