UL 1310

Underwriters Laboratories Inc.

Standard for Safety

Class 2 Power Units

AVA Documents
Document Sharing Hub

Full document details: UL 1310 2010

Documents
Document Sharing Hub

Full document details: UL 1310 2010

UL Standard for Safety for Class 2 Power Units, UL 1310

Fifth Edition, Dated May 3, 2005

Summary of Topics

These revisions to ANSI/UL 1310 include the following changes in requirements:

Revision to the Maximum Temperature Rises Table to include Class 120 insulation systems

Addition of dimensions to the rain test spray-head figure

Text that has been changed in any manner or impacted by UL's electronic publishing system is marked with a vertical line in the margin. Changes in requirements are marked with a vertical line in the margin and are followed by an effective date note indicating the date of publication or the date on which the changed requirement becomes effective.

The revised requirements are are substantially in accordance with Proposal(s) on this subject dated July 9, 2010.

All rights reserved. No part of this publication may be reproduced, stored in a retrieval system, or transmitted in any form by any means, electronic, mechanical photocopying, recording, or otherwise without prior permission of UL.

UL provides this Standard ″as is″ without warranty of any kind, either expressed or implied, including but not limited to, the implied warranties of merchantability or fitness for any purpose.

In no event will UL be liable for any special, incidental, consequential, indirect or similar damages, including loss of profits, lost savings, loss of data, or any other damages arising out of the use of or the inability to use this Standard, even if UL or an authorized UL representative has been advised of the possibility of such damage. In no event shall UL's liability for any damage ever exceed the price paid for this Standard, regardless of the form of the claim.

Users of the electronic versions of UL's Standards for Safety agree to defend, indemnify, and hold UL harmless from and against any loss, expense, liability, damage, claim, or judgment (including reasonable attorney's fees) resulting from any error or deviation introduced while purchaser is storing an electronic Standard on the purchaser's computer system.

The requirements in this Standard are now in effect, except for those paragraphs, sections, tables, figures, and/or other elements of the Standard having future effective dates as indicated in the note following the affected item. The prior text for requirements that have been revised and that have a future effective date are located after the Standard, and are preceded by a ″SUPERSEDED REQUIREMENTS″ notice.

Documents
Document Sharing Hub

Full document details: UL 1310 2010

No Text on This Page

Documents
Document Sharing Hub

Full document details: UL 1310 2010

MAY 3, 2005
(Title Page Reprinted: September 30, 2010)

ANSI/UL 1310-2010

1

UL 1310

Standard for Class 2 Power Units

The first and second edition were titled Standard for Direct Plug-In Transformer Units.

First Edition – May, 1981
Second Edition – September, 1986
Third Edition – August, 1992
Fourth Edition – July, 1994

Fifth Edition

May 3, 2005

This ANSI/UL Standard for Safety consists of the Fifth Edition including revisions through September 30, 2010.

The most recent designation of ANSI/UL 1310 as an American National Standard (ANSI) occurred on September 28, 2010. ANSI approval for a standard does not include the Cover Page, Transmittal Pages, Title Page, or effective date information.

Comments or proposals for revisions on any part of the Standard may be submitted to UL at any time. Proposals should be submitted via a Proposal Request in UL's On-Line Collaborative Standards Development System (CSDS) at http://csds.ul.com.

UL's Standards for Safety are copyrighted by UL. Neither a printed nor electronic copy of a Standard should be altered in any way. All of UL's Standards and all copyrights, ownerships, and rights regarding those Standards shall remain the sole and exclusive property of UL.

COPYRIGHT © 2010 UNDERWRITERS LABORATORIES INC.

Documents
Document Sharing Hub

Full document details: UL 1310 2010

No Text on This Page

Documents
Document Sharing Hub

Full document details: UL 1310 2010

CONTENTS

INTRODUCTION

1 Scope 6A
2 Glossary 7
3 Components 8A
4 Units of Measurement 9
5 Undated References 9
6 Terminology 9

CONSTRUCTION

7 Mechanical Assembly 9
8 Enclosure 16
9 Protection Against Corrosion 17
10 Switches 17
11 Protective Devices 18
12 Components 19
13 Coil Insulation 20
13.1 General 20
13.2 Insulation for transformers 20
14 Input Connections 23
14.1 Direct plug-in units 23
14.2 Cord-connected units 24
14.3 DC input units 25
15 Output Connections 26
15.1 General 26
15.2 Output wiring 26
15.3 Output terminals 26A
15.4 Output connectors 27
15.5 Bushings 28
16 Accessibility of Live Parts 28
16.1 General 28
16.2 Live parts other than exposed wiring terminals 31
16.3 Exposed wiring terminals 33
17 Live Parts 33
18 Strain Relief 34
19 Internal Wiring 34
20 Separation of Circuits 35
21 Insulating Materials 35
22 Printed Wiring Boards 35
23 Grounding 36
23.1 General 36
23.2 Bonding conductor 37
24 Spacings 37

Documents
Document Sharing Hub
Full document details: UL 1310 2010

PERFORMANCE

25 General 40
26 Leakage Current Test 43
27 Leakage Current Test and Dielectric Voltage Withstand Test After Humidity Exposure 45
28 Maximum Output Voltage Test 46
29 Maximum Input Test 46
30 Output Current and Power Test 46
30.1 General 46
30.2 Inherently limited 47
30.3 Not inherently limited 48
31 Calibration of Overcurrent Protection Devices Test 49
32 Full-Load Output Current Test 49
33 Normal Temperature Test 50
34 Dielectric Voltage Withstand Test 53
34.1 General 53
34.2 Induced potential 54
35 Endurance Test on Overcurrent- and Overtemperature-Protective Devices 54
36 Overload and Endurance Tests on Switches and Controls 55
37 Overload Test on Secondary Switches 55
38 Operation Test 56
39 Abnormal Tests 56
39.1 General 56
39.2 Output loading 57
39.2A Output loading – alternate method 58
39.3 Transformer burnout 58A
39.4 Reverse polarity 59
39.5 Switch position 59
39.6 Component breakdown 59
39.7 Printed wiring board abnormal operation test 60
39.8 Backfeed protection 60
40 Tests on Insulating Materials 61
41 Strain Relief Test 62
42 Push-Back Relief Test 63
43 Direct Plug-In Blade Secureness Test 63
44 Direct Plug-In Security of Input Contacts Test 63
44.1 General 63
44.2 Removable, folding, and retractable blade units 64
45 Security of Output Connectors Test 65
46 Abuse Tests 66
46.1 General 66
46.2 Impact on direct plug-in units 66
46.3 Impact on cord connected units 68
46.4 Rod pressure on direct plug-in units 68
46.5 Resistance to crushing on direct plug-in units 68
47 Bonding Conductor Test 68A

MANUFACTURING AND PRODUCTION TESTS

48 Dielectric Voltage Withstand Test 69
49 Grounding Continuity Test 70

Documents
Document Sharing Hub
Full document details: UL 1310 2010

RATING

50 General 71

MARKING

51 General 71
52 Cautionary Markings 73
53 Application of Labeling 75

INSTRUCTIONS

54 Instruction Manual 75

OUTDOOR USE

55 General 76
56 Enclosures 76
57 Protection Against Corrosion 77
58 Gaskets 80
59 Supply Connections 80
60 Output Connections and Wiring 81
61 Spacings 81
62 Accessibility of Live Parts 82
63 Ground-Fault Circuit-Interrupters 82
64 Performance 83
64.1 General 83
64.2 Abuse tests 83
64.3 Rain test 83
64.4 Standing water immersion test 87
65 Markings 87
66 Instructions 88

PERMANENTLY-CONNECTED UNITS

67 General 89
68 Construction 90
69 Wiring Terminals and Leads 91
70 Markings 92
71 Installation Instructions 93

POWER UNITS FOR INSTALLATION IN AIR-HANDLING SPACES

72 General 94
73 Marking 94

POWER UNITS SUPPLIED FROM INFORMATION TECHNOLOGY EQUIPMENT DATA PORTS

74 General 94
75 Glossary 95
76 Supply Connections 95
77 Enclosure 95
78 Performance 95

Documents
Document Sharing Hub
Full document details: UL 1310 2010

78.1 General 95
78.2 Abnormal temperature test 96
78.3 Strain relief test 96
79 Markings 97
80 Instructions 97

APPENDIX A

Standards for Components. A1

Documents
Document Sharing Hub
Full document details: UL 1310 2010

INTRODUCTION

1 Scope

1.1 These requirements cover indoor and outdoor use Class 2 power supplies and battery chargers. These units utilize an isolating transformer and may incorporate components to provide an alternating- or direct-current output. Each output provides Class 2 power levels in accordance with the National Electrical Code, ANSI/NFPA 70. Maximum output voltage does not exceed 42.4 V peak for alternating current, 60 V for continuous direct current. These products are intended primarily to provide power to low voltage, electrically operated devices. These requirements apply to:

a) Portable and semipermanent mounted direct plug-in units provided with 15 A blade configurations for use on nominal 120 or 240 V alternating current branch circuits with a maximum potential of 150 V to ground;

b) Cord- and plug-connected units provided with a 15 or 20 A attachment plug configuration for use on nominal 120 or 240 V alternating current branch circuits with a maximum potential of 150 V to ground; and

c) Units permanently connected to the input supply for use on nominal 600 V or less alternating or direct current branch circuit.

Direct plug-in and cord-connected units may also be provided with an integral cigarette lighter connector assembly, or a direct current input jack for being powered from a vehicle battery adapter or from a data port associated with information technology equipment. These units utilize an isolating transformer and may incorporate components to provide an alternating- or direct-current output. Each output provides Class 2 power levels in accordance with the National Electrical Code, ANSI/NFPA 70. Maximum output voltage does not exceed 42.4 V peak for alternating current, 60 V for continuous direct current. These products are intended primarily to provide power to low voltage, electrically operated devices.

1.1 revised April 1, 2010

1.2 These requirements cover direct plug-in and cord-connected products whose input power does not exceed 660 W under any possible condition of output loading.

1.2 revised July 3, 2009

1.3 These requirements do not cover the effect that a power unit may have on the equipment or system to which it is connected.

1.4 A product marked for a specific end-use (such as for use with audio-, radio-, or video-type equipment; medical or dental equipment; or tools) may be subject to additional requirements found in the applicable end-product standard. See 51.4.

1.5 These requirements do not cover products intended to charge batteries for starter motors used to start engines. Products of this type are covered by the Standard for Battery Chargers for Charging Engine-Starter Batteries, UL 1236.

Documents
Document Sharing Hub
Full document details: UL 1310 2010

1.6 These requirements cover Class 2 products, as defined in this standard, intended for use with toys. Products of this type shall also comply with the Standard for Toy Transformers, UL 697.

1.7 These requirements do not cover products with outputs other than Class 2, nor battery chargers intended to charge batteries employed in wheel chairs or similar types of mobility aids. Products of this type are covered by the Standard for Power Units Other Than Class 2, UL 1012.

1.8 Products without a rectifier may be covered by the Standard for Low Voltage Transformers – Part 1: General Requirements, UL 5085-1, and the Standard for Low Voltage Transformers – Part 3: Class 2 and Class 3 Transformers, UL 5085-3.

1.8 revised July 17, 2008

Documents
Document Sharing Hub

Full document details: UL 1310 2010

1.9 These requirements do not cover products powered solely by a dc source. Products of this type are covered by the Standard for Power Converters/Inverters and Power Converter/Inverter Systems for Land Vehicles and Marine Craft, UL 458, or by other requirements appropriate for the intended application.

1.10 These requirements do not cover products intended for supplying low voltage landscape lighting. Products of this type are covered by the Standard for Low Voltage Landscape Lighting Systems, UL 1838.

2 Glossary

2.1 For the purpose of this standard, the following definitions shall apply:

2.2 BONDING CONDUCTOR – A conductor by which dead metal parts are bonded (connected) to the grounding means.

2.3 CLASS 2 – A source having limited voltage and energy capacity. Requirements for voltage and energy capacity limitations are as indicated in this standard. See the Maximum Output Voltage Test, Section 28, and the Output Current and Power Test, Section 30.

2.4 CONDUCTIVELY CONNECTED – A part is conductively connected to another part if the current between the parts exceeds the limit for leakage current specified in Leakage Current Test, Section 26.

2.5 CONSECUTIVE BATTERY CHARGER – A battery charger whose charging cycle is completed in four hours or less.

2.6 DIRECT CURRENT (DC) – A voltage or current waveform where the instantaneous value does not vary.

2.7 ENCLOSURE – Any surface or surrounding structure that prevents access to a real or potential risk of electric shock or injury to persons.

2.8 ENERGY LIMITING CIRCUIT/ENERGY LIMITING IMPEDANCE – A circuit or component depended on to limit an output to Class 2 levels or to limit energy to an accessible part. Reliability of circuit components shall be determined unless the unit is tested as specified in 39.6.1.

2.9 INDOOR USE – Use in an indoor location or where wet contact is not likely to occur.

2.10 INJURY TO PERSONS – The words ″injury to persons″ are in reference to physical harm to persons other than the physiological effects of electric shock.

2.10.1 MULTIPLE VOLTAGE RATED POWER UNIT – A power unit with a rated voltage range (such as 100 – 240 volts) or a power unit with more than one discrete voltage rating (such as 120/240 volts).

2.10.1 added July 17, 2008

2.10.2 POWER UNIT INTENDED FOR USE BY TRAVELERS – A multiple voltage rated direct plug-in power unit with a 125 V 15 A (parallel) input blade configuration, or a multiple voltage rated cord-connected power unit with a non-detachable power supply cord terminating in a 125 V 15 A (parallel) blade plug.

2.10.2 added July 17, 2008

2.11 RISK OF ELECTRIC SHOCK – A risk of electric shock is considered to exist if:

a) The voltage between parts exceeds the value specified in 16.2.2, and

Documents
Document Sharing Hub

Full document details: UL 1310 2010

b) The current between the parts measured in the Leakage Current Test, Section 26, exceeds 0.5 mA.

2.12 TAB, INTEGRAL (including a mounting tab) – A molded on or otherwise mechanically secured tab provided as part of the enclosure. An integral tab is usually not provided as part of the required enclosure, but may be provided for compliance with certain requirements of this standard.

2.13 UNIT – For the purposes of this standard, a unit is either a direct plug-in unit, a cord connected unit, or a unit permanently connected to the input supply.

2.14 UNIT, CORD-CONNECTED – A power unit which employs a cord and plug assembly for connection to the branch circuit.

2.15 UNIT, DIRECT PLUG-IN – A power unit which employs a blade assembly on the enclosure for connection to the branch circuit.

2.16 UNIT, LINEAR DESIGN – A unit employing a branch circuit frequency transformer design where operation is not dependent on circuitry.

2.17 UNIT, PORTABLE – A unit other than a stationary unit or semipermanent mounted unit.

2.18 UNIT, SEMIPERMANENT MOUNTED – A direct plug-in unit provided with a mounting tab. For the purpose of this standard, semipermanent mounted units shall also comply with the requirements for portable units unless otherwise specified.

2.19 UNIT, STATIONARY – A cord- and plug-connected unit that is:

a) Intended to be fastened in place;

b) Intended to be located in a dedicated space; or

c) Not easily moved.

2.20 UNIT, SWITCH MODE DESIGN – A unit employing a high frequency transformer design where transformer operation is dependent on an inverter circuit.

2.21 WORKING VOLTAGE – The highest voltage to which the insulation under consideration is, or is able to be, subjected when the equipment is operating at its rated voltage under conditions of normal use.

Documents
Document Sharing Hub
Full document details: UL 1310 2010

3 Components

3.1 Except as indicated in 3.2, a component of a product covered by this standard shall comply with the requirements for that component. See Appendix A for a list of standards covering components used in the products covered by this standard.

3.2 A component is not required to comply with a specific requirement that:

a) Involves a feature or characteristic not required in the application of the component in the product covered by this standard, or

b) Is superseded by a requirement in this standard.

3.3 A component shall be used in accordance with its rating established for the intended conditions of use.

Documents
Document Sharing Hub
Full document details: UL 1310 2010

No Text on This Page

Documents
Document Sharing Hub

Full document details: UL 1310 2010

3.4 Specific components are incomplete in construction features or restricted in performance capabilities. Such components are intended for use only under limited conditions, such as certain temperatures not exceeding specified limits, and shall be used only under those specific conditions.

4 Units of Measurement

4.1 Values stated without parentheses are the requirement. Values in parentheses are explanatory or approximate information.

4.2 Unless otherwise stated, values of current and voltage are rms.

5 Undated References

5.1 Any undated reference to a code or standard appearing in the requirements of this standard shall be interpreted as referring to the latest edition of that code or standard.

6 Terminology

6.1 The term ″power unit″ as used in these requirements refers to all power supplies, battery chargers, and transformers covered by these requirements.

CONSTRUCTION

7 Mechanical Assembly

7.1 A unit shall be formed and assembled so that it has the strength and rigidity necessary to resist the abuses to which it is likely to be subjected, without producing or increasing a risk of fire, electric shock, or injury to persons due to total or partial collapse with resulting reduction of spacings, loosening or displacement of parts, or other serious defects. See also 46.1.1.

7.2 A unit shall have all parts reliably secured in place.

7.3 An enclosure, an opening, a frame, a guard, a knob, a handle, or the like shall not be sufficiently sharp to cause a risk of injury in normal maintenance or use.

7.4 A unit shall be constructed so that it is not necessary to open or remove the enclosure when the unit is used as intended.

7.5 Each lampholder, switch, and similar component shall be mounted securely and shall be prevented from turning by more than friction between surfaces. For example, the use of a lock washer is acceptable to prevent the turning of a device having a single hole mounting means.

Exception No. 1: A lampholder of a type in which the lamp cannot be replaced (such as a neon pilot or indicator light in which the lamp is sealed in by a nonremovable jewel) need not be prevented from turning if rotation cannot reduce spacings below the minimum acceptable values or produce stress on an electrical connection.

Exception No. 2: A switch or other similar component need not comply with this requirement if the turning of such a component and servicing of the part introduces no additional risk of fire or electric shock, such as reduced spacings below minimum acceptable values or stress on an electrical connection.

Documents
Document Sharing Hub
Full document details: UL 1310 2010

7.6 A replaceable lamp in a unit shall be wired in the secondary circuit, and shall be replaceable without opening the enclosure. There shall be no primary live part accessible to contact during lamp replacement.

7.7 A nonreplaceable pilot lamp, such as an indicating-type overload- or short-circuit protector, a neon light, or an indicator light, is one in which the lamp is sealed-in, such as by a nonremovable jewel.

7.8 A switch in the primary circuit or an overcurrent-protective device shall be located within the unit enclosure in such a manner as not to be accessible or exposed to tampering nor subject to damage during normal use. This requirement does not apply to the actuating means of a switch, except as noted in 7.10.

7.9 If the exterior part of the switch or control forms part of a unit enclosure, the part shall be subjected to the Abuse Tests, Section 46.

7.10 The requirements in 7.8 also apply to the actuating means – toggle, handle, or the like – if the dislodging of such part exposes live parts or film-coated magnet wire that can be contacted as specified in Accessibility of Live Parts, Section 16.

7.11 The maximum acceptable moment, center of gravity, dimensions, and weight of a direct plug-in unit shall comply with the following requirements (See 7.12):

a) The quotient of WY/Z shall not exceed 48 ounces (1361 g);

b) The quotient of WY/S shall not exceed 48 ounces (1361 g);

c) The product of WX shall not exceed 80 ounce-inches (0.56 N·m) for a unit not intended for use by travelers, and 36 ounce-inches (0.25 N·m) for a unit intended for use by travelers (see 14.1.4); and

d) The weight of a unit shall not exceed 28 ounces (794 g).

7.11 effective May 3, 2007

Where the definitions for the symbols are as follows:

W is the weight of the unit in ounces (g).

Y is the distance illustrated in Figure 7.1 in inches (mm).

Z is the lesser of the two distances, Z_1 or Z_2, as illustrated in Figure 7.1 in inches (mm).

S is the lesser of the two distances, S_1 or S_2, as illustrated in Figure 7.1 in inches (mm).

X is the greater of the two distances, X_1 or X_2, as illustrated in Figure 7.1 in inches (mm).

Documents
Document Sharing Hub
Full document details: UL 1310 2010

Figure 7.1
Dimensions of a direct plug-in unit

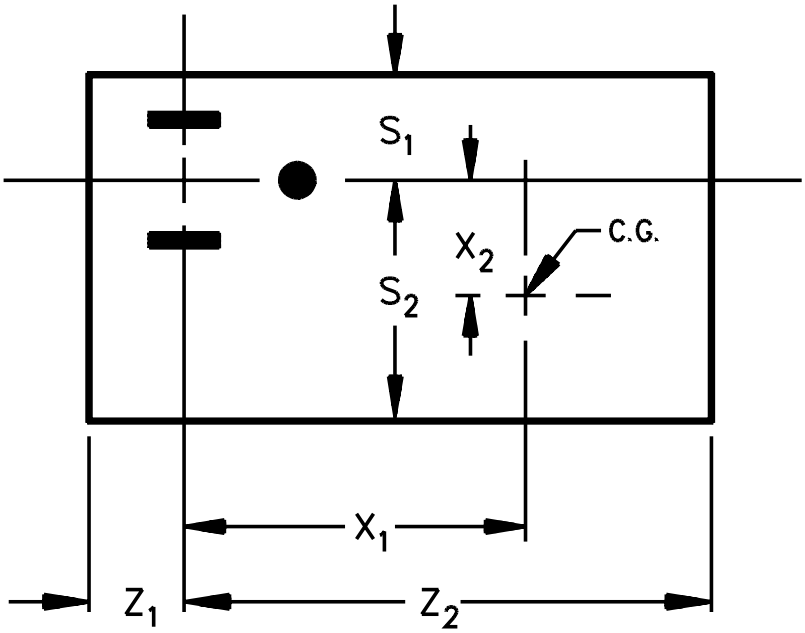

FRONT VIEW

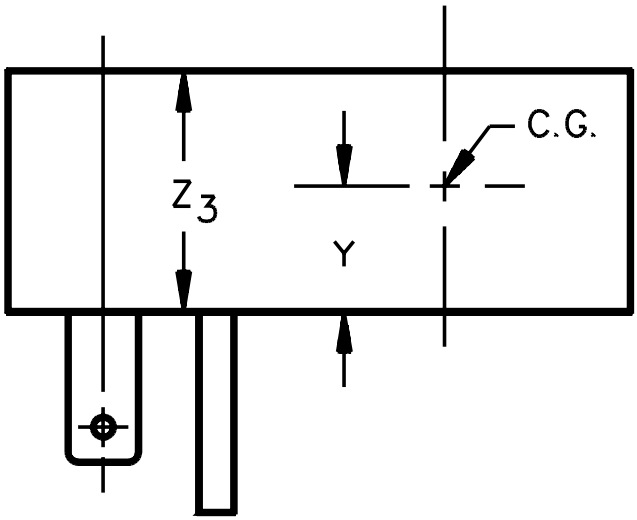

SIDE VIEW

C.G. = Center of Gravity

CP100

Documents
Document Sharing Hub
Full document details: UL 1310 2010

7.12 The moment and weight specified in 7.11 are to be determined as follows:

a) For units with an output cord, the cord is to be cut off at the enclosure, or at the strain-relief means if the strain-relief means is outside the enclosure.

b) For units with directly mounted accessories, the values are to be measured with the accessories in place.

c) An integral tab is not to be included in measurements of the linear dimensions for the purpose of determining moments unless:

1) The tab and enclosure withstand the impact described in 46.2.1 with one impact on the tab itself, without deformation; and

2) For a polymeric enclosed unit having an integral tab, the tab and enclosure do not distort at temperatures to which the material may be subjected under conditions of normal and abnormal use as determined by the mold stress relief distortion test in the Standard for Polymeric Materials – Use in Electrical Equipment Evaluations, UL 746C.

7.13 When inserted in a duplex receptacle, no part of a direct plug-in unit, including an integral tab or output wiring, shall interfere with full insertion of an attachment plug into the adjacent receptacle. See Figure 7.2 and Figure 7.3.

Exception: This requirement does not apply to a unit that renders the adjacent receptacle completely unusable in any one mounting position.

Documents
Document Sharing Hub

Full document details: UL 1310 2010

Figure 7.2
125V, 15A Duplex receptacle

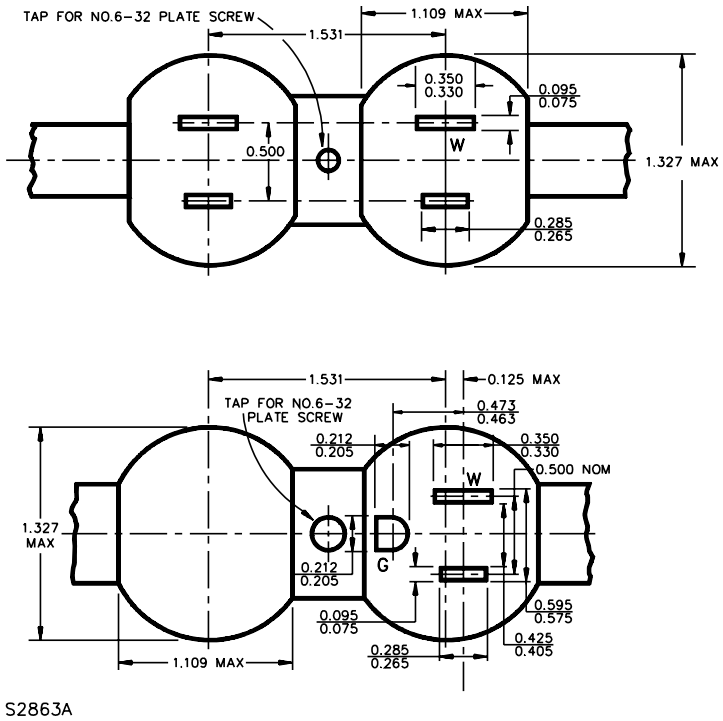

Figure 7.3
250V, 15A Duplex receptacle

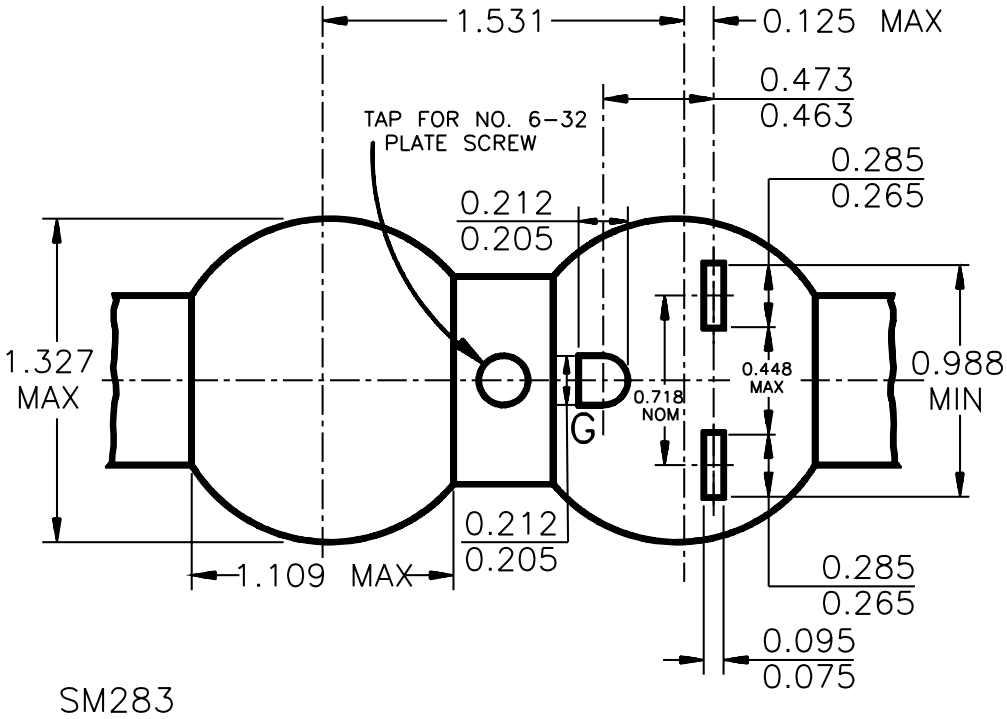

Documents
Document Sharing Hub
Full document details: UL 1310 2010

7.14 A portable cord-connected unit intended for wall mounting shall employ key hole slots or the equivalent as a mounting means.

7.15 A mounting tab shall not be provided with a direct plug-in unit unless all of the following conditions are met:

a) The unit is intended for use on a 15-ampere, 125- or 250-volt receptacle;

b) A screw is provided and constructed to secure the mounting tab of the unit to a duplex receptacle that has a center screw (see Figure 7.2);

c) For a unit without a grounding pin, the mounting tab is constructed so that the unit may be mounted to both grounding and nongrounding receptacles; and

d) The unit is marked as specified in 52.4.

7.16 The enclosure of a unit shall be capable of being gripped for removal from the receptacle to which it is connected, and the perimeter of the face section from which the blades project shall not be less than 0.20 inch (5.1 mm) from any point on either blade. In order to determine compliance with this requirement for units with rounded edges, the perimeter of the face section is considered to be the point at which the articulate probe is able to access as shown in Figure 7.5.

Exception: For products that are intended for use with children's toys, this distance shall be increased to 7.9 mm, as required in the Standard for Toy Transformers, UL 697. These products shall be marked "intended for use with children's toys," or an equivalent marking.

7.17 With reference to 7.16, for an extension from the face for mechanical support of the blades provided as shown in Figure 7.4, the point of measurement shall be determined by application of the articulate probe, Figure 16.2, as shown in Figure 7.5.

7.18 With reference to 7.16, for a direct plug-in unit employing removable blades for the input connectors, the measurement shall also be determined on the plug module while removed from the direct plug-in unit.

7.18 added July 3, 2009

Documents
Document Sharing Hub

Full document details: UL 1310 2010

Figure 7.4
Extension for mechanical support of blades

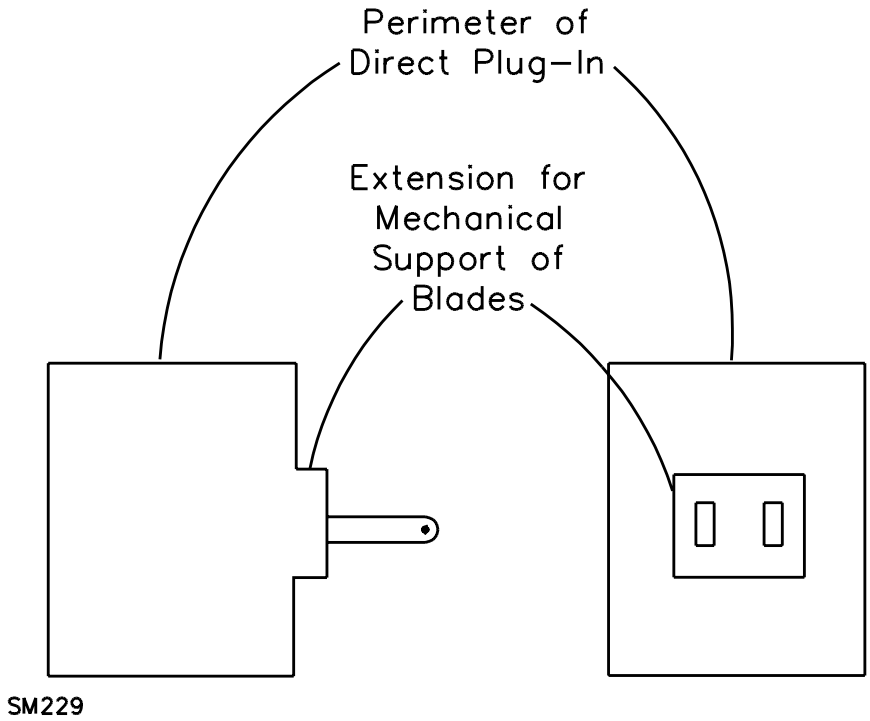

Figure 7.5
Determination of perimeter of units with rounded edges

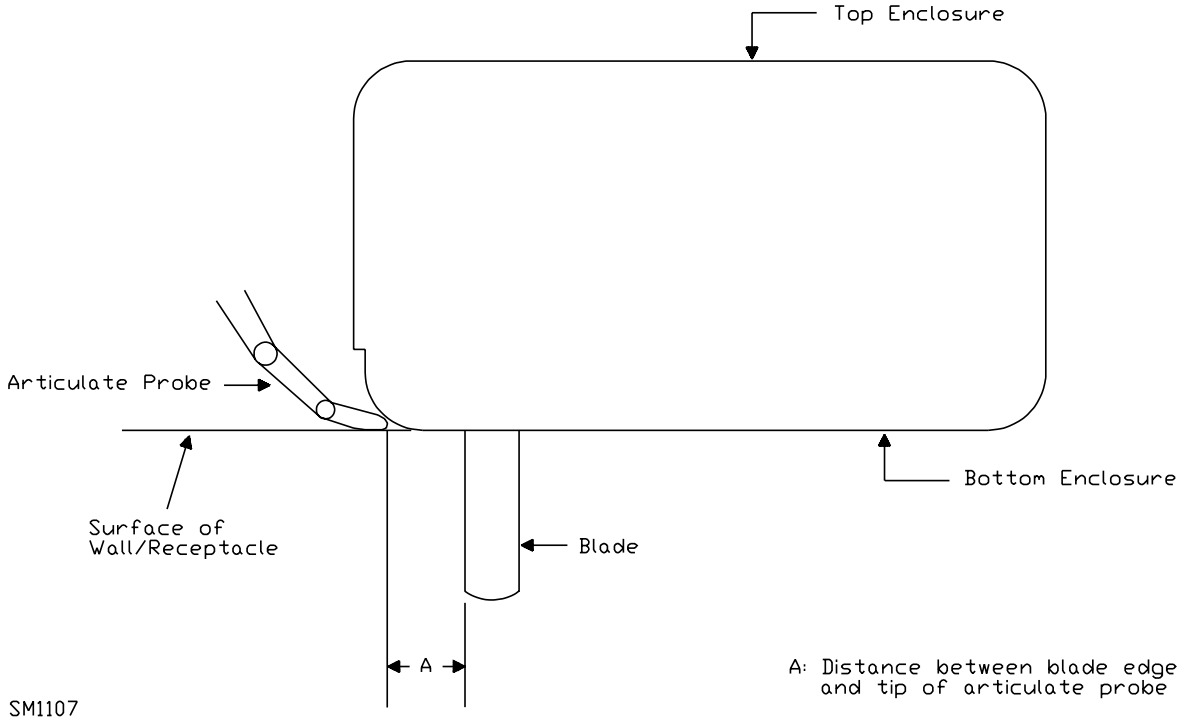

Documents
Document Sharing Hub
Full document details: UL 1310 2010

8 Enclosure

8.1 A unit shall be provided with an enclosure that shall house all current-carrying parts that pose a risk of electric shock. The enclosure shall have the strength and properties necessary to reduce the risk of mechanical damage to the various parts.

8.2 A unit shall have no openings larger than those complying with 16.2.1.

8.3 If an acceptable grade of vulcanized fiber is used as part of the enclosure for the support of secondary parts (terminals and the like) that do not present a risk of fire or electric shock, the amount of fiber shall not be more than is necessary to support the secondary parts in question. The fiber shall not be less than 1/32 inch (0.8 mm) thick and shall not introduce a risk of fire, electric shock, or injury to persons as a result of abuse. See 46.1.1.

8.4 An enclosure constructed of sheet metal shall be formed from stock having a thickness not less than that specified in Table 8.1. The thickness of enclosure sheet metal other than steel or aluminum shall not be less than that specified in Table 8.1 for uncoated steel and shall have the necessary strength and rigidity.

Exception: For transformers with end bells forming part of the enclosure, sheet steel having a thickness of not less than 0.020 inch (0.51 mm) if uncoated, or 0.023 inch (0.58 mm) if zinc coated, may be used if the drawn end bells have maximum dimensions of 2-1/4 inches (57.2 mm) on the flat portion and 1-1/2 inches (38.1 mm) at the base of the drawn portion.

Table 8.1
Minimum acceptable thickness of enclosure metal

Metal	At small, flat, unreinforced surfaces and at surfaces of a shape or size to provide adequate mechanical strength		At relatively large unreinforced flat surfaces	
	Inches	(mm)	Inches	(mm)
Die-cast	3/64	(1.2)	5/64	(2.0)
Cast malleable iron	1/16	(1.6)	3/32	(2.4)
Other cast metal	3/32	(2.4)	1/8	(3.2)
Uncoated sheet steel	0.026	(0.66)	0.026	(0.66)
Galvanized sheet steel	0.029	(0.74)	0.029	(0.74)
Nonferrous sheet metal other than copper	0.036	(0.91)	0.036	(0.91)
Copper	0.033	(0.84)	0.033	(0.84)

8.5 In addition to the performance tests specified in this Standard, the factors to be considered when evaluating a polymeric enclosure are:

a) Material Flammability properties;

b) Resistance to arcing properties; and

Documents
Document Sharing Hub
Full document details: UL 1310 2010

c) Moisture absorptive properties.

These properties shall comply with the requirements in the Standard for Polymeric Materials – Use in Electrical Equipment Evaluations, UL 746C. For the purpose of this requirement, a semipermanent mounted unit is to be considered a portable unit.

8.6 A conductive coating applied to a nonmetallic surface such as the inside surface of a cover, enclosure, and the like shall comply with the appropriate requirements in the Standard for Polymeric Materials – Use in Electrical Equipment Evaluations, UL 746C, unless it can be determined that flaking or peeling of the coating does not result in a reduction of spacings or the bridging of live parts that may result in a risk of fire, electric shock, or injury to persons.

8.7 An adhesive used in the assembly of the enclosure shall be investigated as specified in the Standard for Polymeric Materials – Use in Electrical Equipment Evaluations, UL 746C.

Exception: A method utilizing fusion techniques, such as solvent cementing, ultrasonic welding, electromagnetic induction, and thermal welding need not be investigated.

9 Protection Against Corrosion

9.1 Except as noted in 9.2, iron and steel parts shall be protected against corrosion by galvanizing, plating, enameling, or other equivalent means if the corrosion of such unprotected parts results in a risk of fire, electric shock, or injury to persons.

Exception: This requirement does not apply to a part made of stainless steel.

9.2 The requirement in 9.1 applies to all enclosing cases or to other parts upon which intended mechanical operation may depend. It does not apply to laminations and small minor parts of iron or steel, such as washers, screws, and bolts, that are not current carrying, if the corrosion of such unprotected parts would not result in a risk of fire, electric shock, or injury to persons, or result in the device not operating as intended.

10 Switches

10.1 The requirements in this Section apply to switches not in a Class 2 circuit, and to switches in a Class 2 circuit the breakdown of which electrically or mechanically is likely to introduce a risk of fire or electric shock.

10.2 A switch subjected to a temperature higher than 50°C (122°F) shall be evaluated with respect to the temperature limits of the materials used.

10.3 A switch shall be located and positioned so that it is not subject to mechanical damage during normal use or as a result of abuse. See 46.1.1.

10.4 Other than as indicated in 10.7 and 10.8, a switch or other control device shall be acceptable for the application and shall have current and voltage ratings not less than those of the load that it controls.

Documents
Document Sharing Hub
Full document details: UL 1310 2010

10.5 A primary circuit switch shall be connected to an ungrounded circuit conductor.

10.6 A primary circuit switch shall have a current rating not less than twice the normal current draw under normal load conditions, or the switch shall be investigated for the application in accordance with the Overload and Endurance Tests on Switches and Controls, Section 36.

10.7 A switch or other control device connected in the output circuit may be used if the device complies with the Normal Temperature Test and the Overload Test on Secondary Switches. See 33.1 and 37.1.

10.8 A switch or other controller not having an acceptable rating and located on a direct plug-in unit where it cannot be operated unless the unit is withdrawn from a receptacle may be used if it complies with the Operation Test, Section 38.

11 Protective Devices

11.1 A protective device built into a unit shall comply with the requirements for that component.

11.2 The protective device may be located in either the primary or secondary circuit.

11.3 Crossed or nicked (reduced) cross-section conductors shall not be employed as a protective device.

11.4 Protective devices mentioned in 11.1 include, but are not limited to, eutectic material, fuses, overtemperature and overcurrent protectors, thermal protectors, and similar devices intended to interrupt or limit the flow of current as a result of overload.

11.5 A thermostat, thermal cutoff, Positive Temperature Coeffecient (PTC) resistor, or Negative Temperature Coefficient (NTC) resistor incorporated in a unit shall not cause a risk of fire or electric shock due to improper application.

11.6 A manually reset thermostat shall be constructed so that automatic tripping of the thermostat is not prevented by any setting or position of the reset mechanism.

11.7 An automatically or manually reset protective device or a replaceable overcurrent-protective device shall not open when the unit is delivering its rated output. See the Normal Temperature Test, Section 33.

11.8 A primary circuit overcurrent protective device of the single-pole type, other than an automatic control without a marked ″off″ position, shall be connected to an ungrounded circuit conductor. See Exception No. 5 to 14.2.1.

11.9 When a single fuse is located in the primary circuit, it shall be connected to an ungrounded circuit conductor.

Exception: This requirement does not apply to a unit not intended to be serviced.

11.10 When both circuit conductors of a product intended for connection to a nominal 120 volt branch circuit are fused, the fuse in the grounded circuit conductor shall be rated not less than the fuse in the ungrounded circuit conductor. See 52.8.

Exception: This requirement does not apply to a unit not intended to be serviced.

Documents
Document Sharing Hub
Full document details: UL 1310 2010

11.11 A unit investigated for compliance with the energy limitations of 30.3.1 shall be provided with protection, such as a fuse or PTC, complying with the Calibration of Overcurrent Protection Devices Test, Section 31.

11.12 A protective device that is provided to comply with 11.11 shall not be of the automatic reclosing type, and shall not have automatic tripping prevented by any setting or position of the reset mechanism. When an accessible control of a manual reset protective device is held in the on or reset position, and the protective device is automatically tripped, the contact shall not automatically return to the closed position.

11.13 An overcurrent protective device shall be located inside the unit enclosure. The device shall be inaccessible to tampering.

Exception: A unit may be provided with an externally replaceable overcurrent protective device. If the device is relied upon for acceptable performance, the device shall not be interchangeable with a device having a higher current rating.

11.14 A fuse provided in the secondary circuit of a not inherently limiting Class 2 power unit shall be rated in accordance with Table 30.2.

12 Components

12.1 A component – a fixed resistor, Positive Temperature Coeffecient (PTC) or Negative Temperature Coefficient (NTC) resistor, diode, or the like – employed to limit (see 2.8) the output of a unit to within the required current or power levels, or otherwise used to obtain acceptable performance, shall have permanence and stability which does not decrease its limiting capacities. Among the factors considered when evaluating a limiting component are:

a) Effect of operating temperature;

b) Electrical stress level;

c) Effect of transient surges; and

d) Resistance to moisture.

12.2 There shall be no components connected between primary and output circuits which result in a conductive connection (see 2.4). If capacitive coupling is provided between primary and output circuits, it shall consist of either:

a) A capacitor complying with the antenna coupling requirements specified in the Standard for Capacitors and Suppressors for Radio- and Television-Type Appliances, UL 1414; or

b) Two capacitors connected in series, each capacitor complying with the requirements in 34.1.3.

Documents
Document Sharing Hub

Full document details: UL 1310 2010

13 Coil Insulation

13.1 General

13.1.1 A coil shall be provided with insulation between the coil and any dead metal part, and between each adjacent pair of windings.

Exception No. 1: Two or more secondary windings may be considered as a single winding and interposing insulation is not required, if, when interconnected, the windings comply with the performance requirements for a single winding.

Exception No. 2: Insulation is not required if the spacings required by 24.1 are provided.

13.1.2 Coil insulation, unless inherently moisture resistant, shall be treated to render it moisture resistant.

13.1.3 Film-coated magnet wire is considered to be moisture resistant.

13.2 Insulation for transformers

13.2.1 The insulation between uninsulated, primary wires of opposite polarity shall be one of the following:

a) Electrical grade paper, waxed or otherwise treated to resist the absorption of moisture, having a total thickness of not less than 0.012 inch (0.305 mm); or

b) Other insulating material having a dielectric breakdown strength of not less than 2500 volts in the thickness used as determined by the Tests on Insulating Materials, Section 40.

13.2.2 Insulation between the primary and secondary windings shall be one of the following (for additional requirements, see 13.2.3 and 13.2.4):

a) Electrical grade paper, waxed or otherwise treated to resist the absorption of moisture, having a total minimum thickness of 0.012 inch (0.305 mm).

b) A molded polymeric material such as a coil form or bobbin having a minimum thickness of 0.025 inch (0.64 mm).

c) Insulation – other than of a molded polymeric material – as specified in 13.2.1(b).

13.2.3 Tape used as insulation in lieu of spacings for a flanged bobbin wound transformer shall provide a continuous 1/32 inch (0.8 mm) minimum wide bent up edge against the bobbin flanges.

13.2.4 A flanged, bobbin-wound transformer shall be subjected to the output loading test described in 39.2. The test shall be continued for 15 days if the transformer has:

a) The primary winding wound over the secondary winding or the secondary winding wound over the primary winding; and

b) The primary winding insulated from the secondary winding by a layer of insulating material other than that specified in 13.2.2(b).

Exception: The test is not required to be applied for 15 days if the following requirements are met:

Documents
Document Sharing Hub
Full document details: UL 1310 2010

a) Multiple layered winding wire is used, which has been evaluated to the requirements for miscellaneous insulating devices and materials of the Standard for Polymeric Materials – Short Term Property Evaluations, UL 746A, the Standard for Polymeric Materials – Long Term Property Evaluations, UL 746B, and the Standard forPolymeric Materials – Use in Electrical Equipment Evaluations, UL 746C;

b) The spacing requirements of Table 24.1 and Table 24.2 are met;

c) The requirements in the Standard for Insulation Coordination Including Clearances and Creepage Distances for Electrical Equipment, UL 840, are met, along with the use of additional securement of the winding, and a Comparative Tracking Index (CTI) rating of 100 for all insulating material is determined; or

d) Insulated wiring is used which has been evaluated to the Standard for Single- and Multi-Layer Insulated Winding Wire, UL 2353.

13.2.4 revised April 1, 2010

13.2.5 Insulation between the primary winding and the core shall be one of the following:

a) Electrical grade paper, waxed or otherwise treated to resist moisture, having a minimum total thickness of 0.012 inch (0.305 mm).

b) A molded polymeric material such as a coil form or bobbin having a minimum thickness of 0.025 inch (0.64 mm).

c) Insulation – other than of a molded polymeric material – as specified in 13.2.1(b).

Exception: Insulation may be reduced or waived between the primary and core when all of the following conditions are met:

a) The core is of a low electrical conductance material, for example ferrite used in switch-mode product;

b) The core is treated as a live and electrically conductive part when judging insulation and spacings between the core and:

i) Accessible metal parts;

ii) The secondary windings; and

iii) Any other output circuitry.

c) In applying (b), the core shall be considered to be at the maximum potential of the primary winding; and

d) Insulation between secondary windings and core are in accordance with 13.2.5.

Documents
Document Sharing Hub
Full document details: UL 1310 2010

13.2.6 Insulation between the primary winding lead connections and a metallic enclosure shall be one of the following:

a) Electrical grade paper, waxed or otherwise treated to resist the absorption of moisture, not less than 0.012 inch (0.305 mm) thick if used in conjunction with an air spacing of one-half that specified in 24.1.

b) Electrical grade paper, waxed or otherwise treated to resist the absorption of moisture having a total thickness of not less than 0.028 inch (0.71 mm) when the insulation is in contact with the enclosure.

c) Insulation having a dielectric breakdown strength of not less than 2500 volts in the thickness used for (a) and 5000 volts in the thickness used for (b) as determined by Tests on Insulating Materials, Section 40.

13.2.7 Insulation in accordance with 13.2.8 shall be provided between a crossover lead and:

a) The turns of the winding to which it is connected,

b) The adjacent winding;

c) The metallic enclosure; and

d) The core.

13.2.8 To comply with 13.2.7, insulation shall be one of the following:

a) Electrical grade paper, waxed or otherwise treated to resist the absorption of moisture, having a total thickness of not less than 0.012 inch (0.305 mm); or

b) Insulation as specified in 13.2.1(b).

Exception No. 1: Any type or thickness of insulation, or a through air spacing less than specified in 24.1, between a crossover lead and the winding to which it is connected may be used if either:

a) The coil withstands the dielectric voltage withstand test described in 34.1.1 and 34.1.2 with the potential applied between the coil leads and with the coil lead cut at the point where it enters the inner layer; or

b) The coil withstands the induced potential test described in 34.2.1 – 34.2.3. See 13.2.9.

Exception No. 2: This requirement does not apply to insulation between a Class 2 secondary crossover lead and:

a) The secondary winding to which the crossover lead is connected;

b) The metallic enclosure; and

c) The core.

Documents
Document Sharing Hub
Full document details: UL 1310 2010

13.2.9 With reference to Exception No. 1 to 13.2.8, the magnet coil of a molded bobbin transformer having a slot for the crossover or start lead – unspliced at the windings – is acceptable as crossover lead insulation if:

a) The slots provide a graduated through air spacing to the winding, increasing to the end turns; and

b) The magnet-coil winding withstands the induced potential test described in 34.2.1 – 34.2.3 or the dielectric voltage withstand test described in 34.1.1 and 34.1.2.

13.2.10 Insulation between the primary-lead connections and the adjacent winding, and between secondary-lead connections and the primary winding shall be one of the following:

a) Electrical grade paper, waxed or otherwise treated to resist the absorption of moisture, having a total thickness of not less than 0.028 inch (0.71 mm); or

b) Other insulating material having a dielectric breakdown strength of not less than 5000 volts in the thickness used as determined by Tests on Insulating Materials, Section 40.

14 Input Connections

14.1 Direct plug-in units

14.1.1 The integral blade assembly of direct plug-in units shall comply with the construction requirements in the Standard for Attachment Plugs and Receptacles, UL 498, and Wiring Devices – Dimensional Specifications, ANSI/NEMA WD6. See 7.16 and 7.17.

14.1.1 revised July 17, 2008

14.1.2 If a direct plug-in unit employs a manually operated line connected single-pole switch or a fuse with an accessible contact, it shall employ a polarized- or grounding-type blade assembly.

14.1.3 If a direct plug-in unit employs removable, folding or retractable blades for the input connectors, it shall comply with the requirements specified in Section 44, Direct Plug-in Security of Input Contacts Test.

14.1.3 revised July 3, 2009

14.1.4 A power unit intended for use by travelers shall comply with (a) – (e):

a) The blade assembly shall be a 125 volt, 15 amp configuration;

b) The power unit shall employ a user adjustable voltage selector and comply with 39.5.1, or be capable of operating at different voltages without user adjustment;

c) The input voltage rating shall include nominal 120 volt;

d) The power unit shall be marked as specified in 51.8; and

e) The power unit shall be provided with instructions as specified in 54.4.

14.1.4 revised July 17, 2008

Documents
Document Sharing Hub
Full document details: UL 1310 2010

14.2 Cord-connected units

14.2.1 A portable or stationary unit shall be provided with a flexible cord in accordance with Table 14.1 and an attachment plug for connection to the branch circuit. The blade assembly for connection to the branch circuit shall be of the polarized- or grounding-type. The length of cord external to the unit and including the attachment plug shall not be less than 6 feet (1.8 m) as measured from the face of the attachment plug to the point of attachment or entry.

Exception No. 1: A unit weighing 1 pound (454 g) or less is acceptable if the total length of the input and output cords is 6 feet or more, and the length of the input cord is at least 3 feet (0.91 m).

Exception No. 2: A stationary power unit intended to be fastened in place may require a form of supply connection that facilitates the interchange of equipment to maintain continuous service or otherwise meet special conditions of use. For such service, a Type S, SE, or equivalent flexible cord may be employed and may be of a length appropriate for the purpose, but no longer than 10 feet (3 m). Normally, a 2 foot (610 mm) length of cord will be sufficient for the plug and the receptacle connection.

Exception No. 3: A power unit marked in accordance with 51.7 and provided with instructions in accordance with 54.3 is not required to be provided with the detachable power supply cord.

Exception No. 4: If a power unit is intended for use in a country other than the U.S.A, the detachable power supply cord shall comply with the requirements of the country of destination.

Exception No. 5: For products that do not require a discharge path, a cord connected unit is not required to be supplied with a polarized plug when it does not include any single pole switches or fuseholders with accessible contacts.

Table 14.1
Acceptable flexible cords for cord connected power units

Table 14.1 revised July 17, 2008

Flexible cord type	Maximum length, feet (m)
At least as serviceable as SP-2, SPE-2, SPT-2, SV, SVE, SVT	10 (3)
At least as serviceable as S, SE, SO, SP-3, SPT-3, ST, STO, SJ, SJE, SJO, SJT, SJTO	Not specified

14.2.2 If a unit with a permanently attached power supply cord can be adapted for use on two or more different voltages by field alteration of internal connections, the attachment plug provided with the unit shall be of a type required for the voltage and current for which the unit is connected when shipped from the factory.

14.2.3 If a multiple voltage rated power unit is intended for use with a detachable power supply cord, the cord shall be provided with the unit if either of the following apply:

a) The power unit is provided with an operator adjustable voltage selector and complies with 39.5.1; or

b) The power unit is capable of operating at different voltages without user adjustment.

The power unit shall be provided with instructions in accordance with 54.1 and 54.2.

Documents
Document Sharing Hub
Full document details: UL 1310 2010

Exception: A power unit marked in accordance with 51.7 and provided with instructions in accordance with 54.3 is not required to be provided with the detachable power supply cord.

14.2.4 A power unit intended for use by travelers shall comply with (a) – (e):

a) The power supply cord shall terminate in a 125 volt, 15 amp plug configuration;

b) The power unit shall employ a user adjustable voltage selector and comply with 39.5.1, or be capable of operating at different voltages without user adjustment;

c) The input voltage rating shall include nominal 120 volt;

d) The power unit shall be marked as indicated in 51.8; and

e) The power unit shall be provided with instructions per 54.4.

14.2.4 revised July 17, 2008

14.3 DC input units

14.3.1 Units with a dc input shall be provided with a vehicle battery adapter in compliance with the Standard for Vehicle Battery Adapters, UL 2089, or with a cable as specified in 76.1.

Exception: A vehicle battery adapter is not required to be provided with the unit, when the unit is marked for use with a required vehicle battery adapter complying with the Standard for Vehicle Battery Adapters, UL 2089.

14.3.1 revised April 1, 2010

14.3.2 A fuse provided with a dc input jack shall not be relied upon to provide the overcurrent protection specified in the Output Current and Power Test, Section 30.

14.3.3 A unit employing an integral cigarette lighter connector assembly shall also comply with the Standard for Vehicle Battery Adapters, UL 2089. In addition, the overall mass of the unit shall not exceed 250 g (8.8 oz). The product of the total mass, and the distance between the center of gravity and the input contact positioned to simulate full insertion into a vehicle power outlet, shall not exceed 13500 g-mm (18.7 oz-in). For a unit with an attached cord, the determination shall be made with the cord severed at the enclosure, or at the strain-relief means if the strain-relief means is outside the enclosure. For a unit with a detachable cord, the determination shall be made with the cord severed from the mating connector connected to the cigarette lighter connector.

14.3.3 added April 1, 2010

Documents
Document Sharing Hub
Full document details: UL 1310 2010

15 Output Connections

15.1 General

15.1.1 A unit shall be provided with an output cord, terminals, insulated leads, or output connectors. A battery charger with backfeed protection shall be provided with an output cord terminating in a connector, or a connector attached to or integral with the enclosure. See 15.4.3.

15.1.1 effective May 3, 2007

15.2 Output wiring

15.2.1 The output wiring shall be stranded conductors having insulation not less than 0.013 inch (0.33 mm) thick, and permanently attached to the output circuit. The wiring shall extend at least 6 feet (1.8 m) outside the unit, and shall comply with the requirements in 18.1 and 18.2.

Exception No. 1: Wiring less than 6 feet long may be used if longer wiring introduces a risk of fire, electric shock, or injury to persons.

Exception No. 2: A product covered by Exception No. 1 to 14.2.1 need not extend the output wiring 6 feet (1.8 m) outside the unit.

15.2.2 For a cord-connected power unit with a minimum 6-foot (1.8-m) power-supply cord, the output flexible cord required by 15.1.1, whether permanently attached to the power unit or provided in the form of a separate cord set, shall be of any desirable length. The maximum combined length of the input and output cords shall not exceed 20 feet (6.1 m).

15.2.3 With respect to 15.2.1, for units with jacketed multiconductor output wiring, the individual conductor insulation may be less than 0.013 inch (0.33 mm) provided that the following conditions are met:

a) The thickness of the individual conductor insulation plus the thickness of the jacket is not less than 0.013 inch; and

b) The unit complies with the requirements in 28.1 and 30.2.1 with any combination of output conductors interconnected.

15.2.4 A fitting having female contacts shall be constructed so that it does not receive the blades of a standard attachment plug. A fitting having male contacts shall be constructed so that the contacts do not touch a live part of a standard attachment-plug receptacle.

Documents
Document Sharing Hub
Full document details: UL 1310 2010

15.3 Output terminals

15.3.1 A terminal plate tapped for a wire-binding screw or stud shall be of brass or other nonferrous metal, or plated steel, not less than 0.030 inch (0.76 mm) thick, and shall provide not less than two full threads in the metal for the binding screw.

Exception No. 1: Two full threads are not required if a lesser number of threads results in a secure connection in which the threads do not strip when subjected to the test specified in 45.1.

Exception No. 2: A plate may be less than 0.030 inch thick if the tapped threads have acceptable mechanical strength. See 45.1.

Exception No. 3: This requirement does not apply to a terminal plate that complies with the Exception to 45.1.

Documents
Document Sharing Hub

Full document details: UL 1310 2010

No Text on This Page

Documents
Document Sharing Hub

Full document details: UL 1310 2010