UL 1340

STANDARD FOR SAFETY

Hoists

Documents
Document Sharing Hub

Copyright UL
Provided by IHS under license with UL
No reproduction or networking permitted without license from IHS
Full document details: UL 1340 2013

Licensee=North Carolina State Univ/5618801100
Not for Resale, 07/06/2013 20:35:32 MDT

UL COPYRIGHTED MATERIAL –
NOT AUTHORIZED FOR FURTHER REPRODUCTION OR
DISTRIBUTION WITHOUT PERMISSION FROM UL

Documents
Document Sharing Hub

Copyright UL
Provided by IHS under license with UL
No reproduction or networking permitted without license from IHS
Full document details: UL 1340 2013

Licensee=North Carolina State Univ/5618801100
Not for Resale, 07/06/2013 20:35:32 MDT

UL Standard for Safety for Hoists, UL 1340

Second Edition, Dated April 3, 2012

Summary of Topics

These revisions to UL 1340 are being issued to update glossary terms, revise the grounding requirements, update motor requirements, increase voltage rating to 1000 V, and add the Limited Short-Circuit Test, Section 38A.

The new and revised requirements are substantially in accordance with Proposal(s) on this subject dated March 22, 2013.

Text that has been changed in any manner or impacted by UL's electronic publishing system is marked with a vertical line in the margin. Changes in requirements are marked with a vertical line in the margin and are followed by an effective date note indicating the date of publication or the date on which the changed requirement becomes effective.

All rights reserved. No part of this publication may be reproduced, stored in a retrieval system, or transmitted in any form by any means, electronic, mechanical photocopying, recording, or otherwise without prior permission of UL.

UL provides this Standard ″as is″ without warranty of any kind, either expressed or implied, including but not limited to, the implied warranties of merchantability or fitness for any purpose.

In no event will UL be liable for any special, incidental, consequential, indirect or similar damages, including loss of profits, lost savings, loss of data, or any other damages arising out of the use of or the inability to use this Standard, even if UL or an authorized UL representative has been advised of the possibility of such damage. In no event shall UL's liability for any damage ever exceed the price paid for this Standard, regardless of the form of the claim.

Users of the electronic versions of UL's Standards for Safety agree to defend, indemnify, and hold UL harmless from and against any loss, expense, liability, damage, claim, or judgment (including reasonable attorney's fees) resulting from any error or deviation introduced while purchaser is storing an electronic Standard on the purchaser's computer system.

The requirements in this Standard are now in effect, except for those paragraphs, sections, tables, figures, and/or other elements of the Standard having future effective dates as indicated in the note following the affected item. The prior text for requirements that have been revised and that have a future effective date are located after the Standard, and are preceded by a ″SUPERSEDED REQUIREMENTS″ notice.

UL COPYRIGHTED MATERIAL –
NOT AUTHORIZED FOR FURTHER REPRODUCTION OR
DISTRIBUTION WITHOUT PERMISSION FROM UL

Documents
Document Sharing Hub

Copyright UL
Provided by IHS under license with UL
No reproduction or networking permitted without license from IHS
Full document details: UL 1340 2013

Licensee=North Carolina State Univ/5618801100
Not for Resale, 07/06/2013 20:35:32 MDT

No Text on This Page

UL COPYRIGHTED MATERIAL –
NOT AUTHORIZED FOR FURTHER REPRODUCTION OR
DISTRIBUTION WITHOUT PERMISSION FROM UL

Documents
Document Sharing Hub

Copyright UL
Provided by IHS under license with UL
No reproduction or networking permitted without license from IHS
Full document details: UL 1340 2013

Licensee=North Carolina State Univ/5618801100
Not for Resale, 07/06/2013 20:35:32 MDT

APRIL 3, 2012
(Title Page Reprinted: May 31, 2013)

UL 1340

Standard for Hoists

First Edition July 30, 2004

Second Edition

April 3, 2012

Comments or proposals for revisions on any part of the Standard may be submitted to UL at any time. Proposals should be submitted via a Proposal Request in UL's On-Line Collaborative Standards Development System (CSDS) at http://csds.ul.com.

UL's Standards for Safety are copyrighted by UL. Neither a printed nor electronic copy of a Standard should be altered in any way. All of UL's Standards and all copyrights, ownerships, and rights regarding those Standards shall remain the sole and exclusive property of UL.

COPYRIGHT © 2013 UNDERWRITERS LABORATORIES INC.

UL COPYRIGHTED MATERIAL –
NOT AUTHORIZED FOR FURTHER REPRODUCTION OR
DISTRIBUTION WITHOUT PERMISSION FROM UL

Documents
Document Sharing Hub

Copyright UL
Provided by IHS under license with UL
No reproduction or networking permitted without license from IHS
Full document details: UL 1340 2013

Licensee=North Carolina State Univ/5618801100
Not for Resale, 07/06/2013 20:35:32 MDT

No Text on This Page

UL COPYRIGHTED MATERIAL –
NOT AUTHORIZED FOR FURTHER REPRODUCTION OR
DISTRIBUTION WITHOUT PERMISSION FROM UL

Documents
Document Sharing Hub

Copyright UL
Provided by IHS under license with UL
No reproduction or networking permitted without license from IHS
Full document details: UL 1340 2013

Licensee=North Carolina State Univ/5618801100
Not for Resale, 07/06/2013 20:35:32 MDT

CONTENTS

INTRODUCTION

1 Scope 6
2 General 6
2.1 Components 6
2.2 Units of measurement 6A
2.3 Undated references 6A
3 Glossary 6A

CONSTRUCTION

ALL HOISTS

4 General 6B
5 Materials and Assembly 7
6 Protection Against Corrosion 7
7 Lubrication 7

ELECTRICALLY POWERED HOISTS

8 Accessibility of Uninsulated Live Parts, Film-Coated Wire, and Moving Parts 9
9 Electrical Component Enclosures 14
9.1 General 14
9.2 Nonmetallic enclosures 14
9.3 Metallic enclosures 16
10 Supply Connections 20
10.1 General 20
10.2 Strain relief 21
10.3 Bushings 21
11 Internal Wiring 21
11.1 General 21
11.2 Wiring methods 23
12 Grounding 24
13 Bonding for Grounding 24B
13.1 General 24B
13.2 Construction and connections 25
14 Mounting of Components 28
15 Capacitors 28
16 Insulating Material 29
17 Motors 30
18 Switches and Controllers 30
19 Interlock Switches 31
20 Uninsulated Live Parts 31
21 Spacings 31
22 Printed-Wiring Boards 34

UL COPYRIGHTED MATERIAL –
NOT AUTHORIZED FOR FURTHER REPRODUCTION OR
DISTRIBUTION WITHOUT PERMISSION FROM UL

Documents
Document Sharing Hub

Copyright UL
Provided by IHS under license with UL
No reproduction or networking permitted without license from IHS
Full document details: UL 1340 2013

Licensee=North Carolina State Univ/5618801100
Not for Resale, 07/06/2013 20:35:32 MDT

PERFORMANCE

ALL HOISTS

23 Normal-Operation Test 34
24 Strength Test 34

ELECTRICALLY POWERED HOISTS

25 Metallic-Coating-Thickness Test 34
26 Leakage Current Test 36
27 Humidity Test 39
28 Continuity of Grounding Test 40
29 Starting Current Test 40
30 Input Test 41
31 Temperature Test 41
32 Strain-Relief Test 44
33 Rain Test 45
34 Dielectric Voltage-Withstand Test 48
35 Power Failure Test 49
36 Tests on Switches and Controllers 49
36.1 General 49
36.2 Speed-changing switches 49
36.3 Motor-reversing switches 50
36.4 Other switches 50
37 Short-Circuit Test – Bonding Conductors 50
38 Impedance Test – Bonding Conductors 52
38A Limited Short-Circuit Test 52

PNEUMATICALLY POWERED HOISTS

39 Input-Pressure Test 52A
40 Hydrostatic Pressure Test 52A

MANUFACTURING AND PRODUCTION TESTS

ELECTRICALLY POWERED HOISTS

41 General 53
42 Dielectric Voltage-Withstand Test 53
43 Grounding-Continuity Test 55

MARKINGS

ALL HOISTS

44 General 55
45 Electrically Powered Hoists 56
46 Pneumatically Powered Hoists 57

INSTALLATION AND OPERATING INSTRUCTIONS

47 General 57

UL COPYRIGHTED MATERIAL –
NOT AUTHORIZED FOR FURTHER REPRODUCTION OR
DISTRIBUTION WITHOUT PERMISSION FROM UL
Documents
Document Sharing Hub

Copyright UL
Provided by IHS under license with UL
No reproduction or networking permitted without license from IHS
Full document details: UL 1340 2013

Licensee=North Carolina State Univ/5618801100
Not for Resale, 07/06/2013 20:35:32 MDT

APPENDIX A

Standards for Components A1

UL COPYRIGHTED MATERIAL –
NOT AUTHORIZED FOR FURTHER REPRODUCTION OR
DISTRIBUTION WITHOUT PERMISSION FROM UL

Documents
Document Sharing Hub

Copyright UL
Provided by IHS under license with UL
No reproduction or networking permitted without license from IHS
Full document details: UL 1340 2013

Licensee=North Carolina State Univ/5618801100
Not for Resale, 07/06/2013 20:35:32 MDT

INTRODUCTION

1 Scope

1.1 These requirements cover hoists of the overhead type intended for material lifting service using either chain or wire rope. They are intended to be suspended from a fixed member and may include trolleys for mobility.

1.2 This standard covers electrically powered hoists rated 1000 volts or less to be employed in nonhazardous environmental locations in accordance with the National Electrical Code, ANSI/NFPA 70.

1.2 revised May 31, 2013

1.3 This standard covers pneumatically powered hoists.

1.4 These requirements do not cover:

a) Manual and power-operated type portable hoists intended for use with scaffolds suspended by wire ropes;

b) Hoists for transporting people;

c) Manual operated chain hoists; or

d) The fixed member or trolley that suspends the hoist.

2 General

2.1 Components

2.1.1 Except as indicated in 2.1.2, a component of a product covered by this standard shall comply with the requirements for that component. See Appendix A for a list of standards covering components used in the products covered by this standard.

2.1.2 A component is not required to comply with a specific requirement that:

a) Involves a feature or characteristic not required in the application of the component in the product covered by this standard, or

b) Is superseded by a requirement in this standard.

2.1.3 A component shall be used in accordance with its rating established for the intended conditions of use.

2.1.4 Specific components are incomplete in construction features or restricted in performance capabilities. Such components are intended for use only under limited conditions, such as certain temperatures not exceeding specified limits, and shall be used only under those specific conditions.

UL COPYRIGHTED MATERIAL –
NOT AUTHORIZED FOR FURTHER REPRODUCTION OR
DISTRIBUTION WITHOUT PERMISSION FROM UL

Documents
Document Sharing Hub

Copyright UL
Provided by IHS under license with UL
No reproduction or networking permitted without license from IHS
Full document details: UL 1340 2013

Licensee=North Carolina State Univ/5618801100
Not for Resale, 07/06/2013 20:35:32 MDT

2.2 Units of measurement

2.2.1 Values stated without parentheses are the requirement. Values in parentheses are explanatory or approximate information.

2.2.2 Unless otherwise indicated, all voltage and current values mentioned in this standard are root-mean-square (rms).

2.3 Undated references

2.3.1 Any undated reference to a code or standard appearing in the requirements of this standard shall be interpreted as referring to the latest edition of that code or standard.

3 Glossary

3.1 For the purpose of this standard the following definitions apply.

3.1.1 BONDED (BONDING) – The permanent joining of metallic parts to form an electrically conductive path that provides electrical continuity and the capacity to conduct any current likely to be imposed without a risk of electric shock, fire, or injury to persons.

3.1.1 added May 31, 2013

3.1.2 BONDING JUMPER – A conductor, including a strap or similar part, that is used to provide the required electrical conductivity between metal parts required to be electrically connected.

3.1.2 added May 31, 2013

3.2 CIRCUITS, ELECTRICAL –

a) High-Voltage – A circuit with a potential of not more than 1000 volts having circuit characteristics greater than those of a low-voltage power-limited circuit.

b) Low-Voltage – A circuit with a potential of not more than 30 volts AC rms, 42.4 volts DC or AC peak, and supplied by:

1) A primary battery;

2) An NEC Class 2 transformer; or

3) A combination of transformer and fixed impedance that, as a unit, complies with all of the performance requirements for a Class 2 transformer.

3.2 revised May 31, 2013

3.2.1 GROUND – A conducting connection, whether intentional or accidental, between an electrical circuit or equipment and the earth or to some conducting body that serves in place of the earth.

3.2.1 added May 31, 2013

3.2.2 GROUNDED – Connected to earth or to some conducting body that serves in place of earth.

3.2.2 added May 31, 2013

UL COPYRIGHTED MATERIAL –
NOT AUTHORIZED FOR FURTHER REPRODUCTION OR
DISTRIBUTION WITHOUT PERMISSION FROM UL

Documents
Document Sharing Hub

Copyright UL
Provided by IHS under license with UL
No reproduction or networking permitted without license from IHS
Full document details: UL 1340 2013

Licensee=North Carolina State Univ/5618801100
Not for Resale, 07/06/2013 20:35:32 MDT

3.2.3 GROUNDING CONDUCTOR – An equipment or circuit conductor that is intentionally connected between that electrical circuit or equipment and the earth or to some conducting body that serves in place of the earth.

3.2.3 added May 31, 2013

3.3 HOIST – A suspended machinery unit that is used for lifting or lowering a freely suspended (unguided) load.

a) ELECTRICALLY POWERED – A hoist in which the prime mover is powered by electricity.

b) PNEUMATICALLY POWERED – A hoist in which the prime mover is powered by compressed gases.

3.4 RATED WORKING LOAD – The manufacturer's specified maximum load to be lifted by the hoist. The maximum load includes the weight of all materials, and all dead loads lifted by the hoist. Dead loads include the weight of:

a) The hoist;

b) Wire rope or chains;

c) Rigging equipment/device(s) attached to the hoist's bottom hook (e.g., slings, spreader bar/beams); and

d) Ancilliary equipment supported by the hoist, such as the electrical cords, air supply hoses, chain container, etc.

CONSTRUCTION

ALL HOISTS

4 General

4.1 A product shall be constructed so that it will have the strength and durability to withstand normal usage and to comply with the performance requirements.

4.2 An exposed metal surface shall be free from sharp edges, burrs, and other features that constitute a risk of injury to persons.

UL COPYRIGHTED MATERIAL –
NOT AUTHORIZED FOR FURTHER REPRODUCTION OR
DISTRIBUTION WITHOUT PERMISSION FROM UL

Documents
Document Sharing Hub

Copyright UL
Provided by IHS under license with UL
No reproduction or networking permitted without license from IHS
Full document details: UL 1340 2013

Licensee=North Carolina State Univ/5618801100
Not for Resale, 07/06/2013 20:35:32 MDT

5 Materials and Assembly

5.1 All metal parts and fittings shall be made of aluminum or steel alloys, wrought iron, malleable iron, or other metal that is of equivalent strength for the intended purpose and shall be securely attached by means of rivets, bolts, screws, or other means determined to be the equivalent. Cast gray iron shall not be used for load-carrying parts.

5.2 Nuts shall be lock nuts or provided with lock washers.

6 Protection Against Corrosion

6.1 All hardware and materials shall be resistant to normal atmospheric corrosion.

Exception: Aluminum, brass, copper, stainless steel, or other metal inherently resistant to corrosion may be used without additional protection.

6.2 Corrosion protection shall be by metallic or nonmetallic coatings, such as galvanizing, sherardizing, plating, or painting.

6.3 Different metals shall not be used in combination such as to cause galvanic action that will adversely affect the strength of the product.

7 Lubrication

7.1 Each separate enclosure of a hoist shall be provided with a means to maintain lubrication of all moving parts requiring lubrication at all times.

7.2 Self-sealed, self-lubricating, and dry bearings may be employed.

UL COPYRIGHTED MATERIAL –
NOT AUTHORIZED FOR FURTHER REPRODUCTION OR
DISTRIBUTION WITHOUT PERMISSION FROM UL

Documents
Document Sharing Hub

Copyright UL
Provided by IHS under license with UL
No reproduction or networking permitted without license from IHS
Full document details: UL 1340 2013

Licensee=North Carolina State Univ/5618801100
Not for Resale, 07/06/2013 20:35:32 MDT

No Text on This Page

UL COPYRIGHTED MATERIAL –
NOT AUTHORIZED FOR FURTHER REPRODUCTION OR
DISTRIBUTION WITHOUT PERMISSION FROM UL

Documents
Document Sharing Hub

Copyright UL
Provided by IHS under license with UL
No reproduction or networking permitted without license from IHS
Full document details: UL 1340 2013

Licensee=North Carolina State Univ/5618801100
Not for Resale, 07/06/2013 20:35:32 MDT

ELECTRICALLY POWERED HOISTS

8 Accessibility of Uninsulated Live Parts, Film-Coated Wire, and Moving Parts

8.1 To reduce the risk of unintentional contact that may involve a risk of electric shock from an uninsulated live part or film-coated wire, or injury to a person from a moving part, an opening in an enclosure shall comply with either (a) or (b).

a) For an opening that has a minor dimension (see 8.5) less than 1 inch (25.4 mm), such a part or wire shall not be contacted by the probe illustrated in Figure 8.1.

b) For an opening that has a minor dimension of 1 inch or more, such a part or wire shall be spaced from the opening as specified in Table 8.1.

Exception No. 1: A motor need not comply with these requirements if it complies with the requirements in 8.2.

Exception No. 2: The inrunning wire rope need not comply with these requirements at any point where a static guide is provided. If roller guides or tension rollers are used, a fixed shield or static guard shall be provided to prevent access to the pinch area by the probe shown in Figure 8.2.

Exception No. 3: For a winding drum hoist, the inrunning wire rope at the drum need not be guarded when the drum is located in an area not readily accessible to a user in the normal work position. The pinch area shall be located off and below, or a minimum of 7 feet (2.13 m) above, the normal scaffold work area.

UL COPYRIGHTED MATERIAL –
NOT AUTHORIZED FOR FURTHER REPRODUCTION OR
DISTRIBUTION WITHOUT PERMISSION FROM UL

Documents
Document Sharing Hub

Copyright UL
Provided by IHS under license with UL
No reproduction or networking permitted without license from IHS
Full document details: UL 1340 2013

Licensee=North Carolina State Univ/5618801100
Not for Resale, 07/06/2013 20:35:32 MDT

Figure 8.1
Articulate probe with web stop

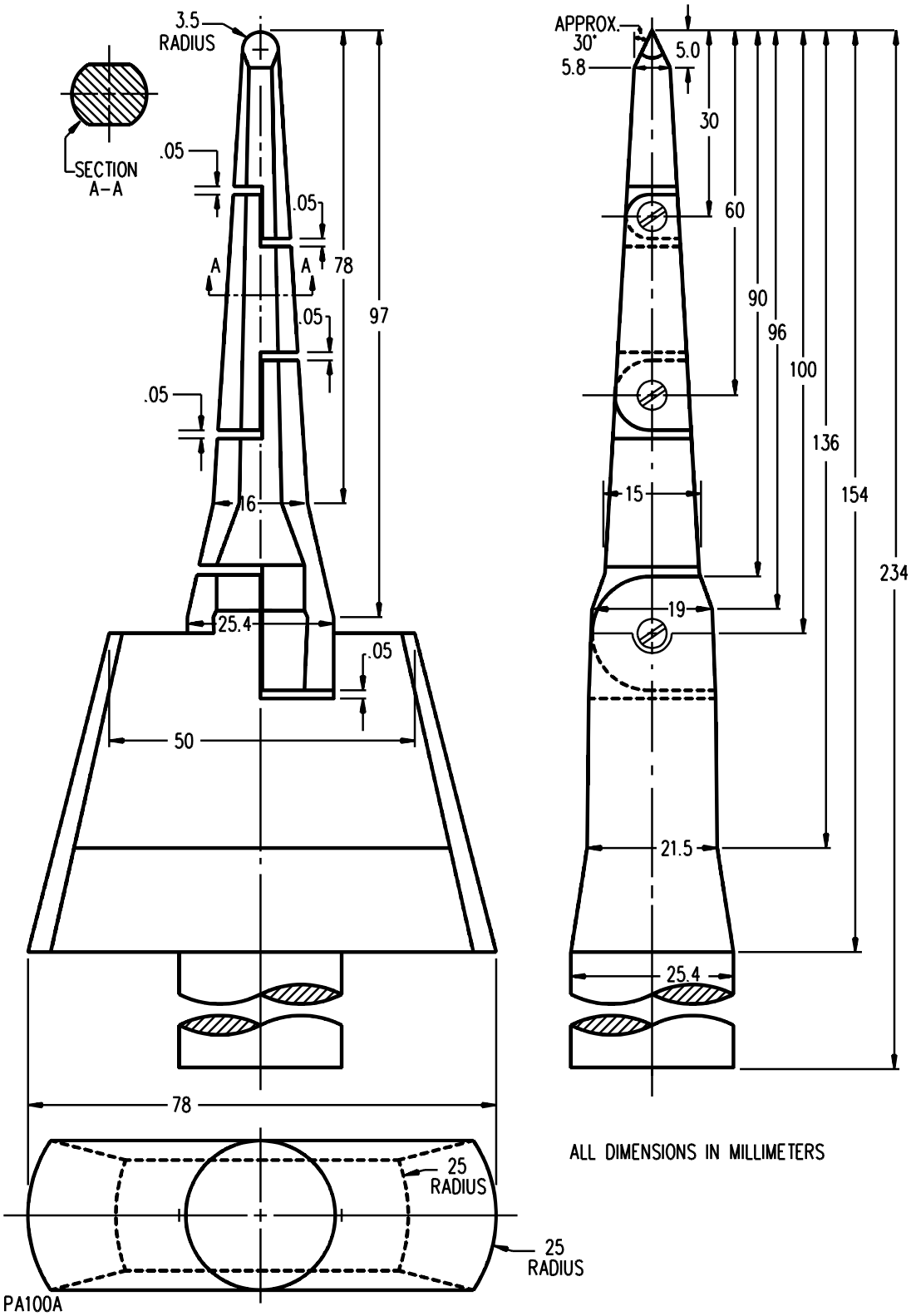

UL COPYRIGHTED MATERIAL –
NOT AUTHORIZED FOR FURTHER REPRODUCTION OR
DISTRIBUTION WITHOUT PERMISSION FROM UL

Documents
Document Sharing Hub

Copyright UL
Provided by IHS under license with UL
No reproduction or networking permitted without license from IHS
Full document details: UL 1340 2013

Licensee=North Carolina State Univ/5618801100
Not for Resale, 07/06/2013 20:35:32 MDT

Figure 8.2
Probe for moving parts and uninsulated live parts

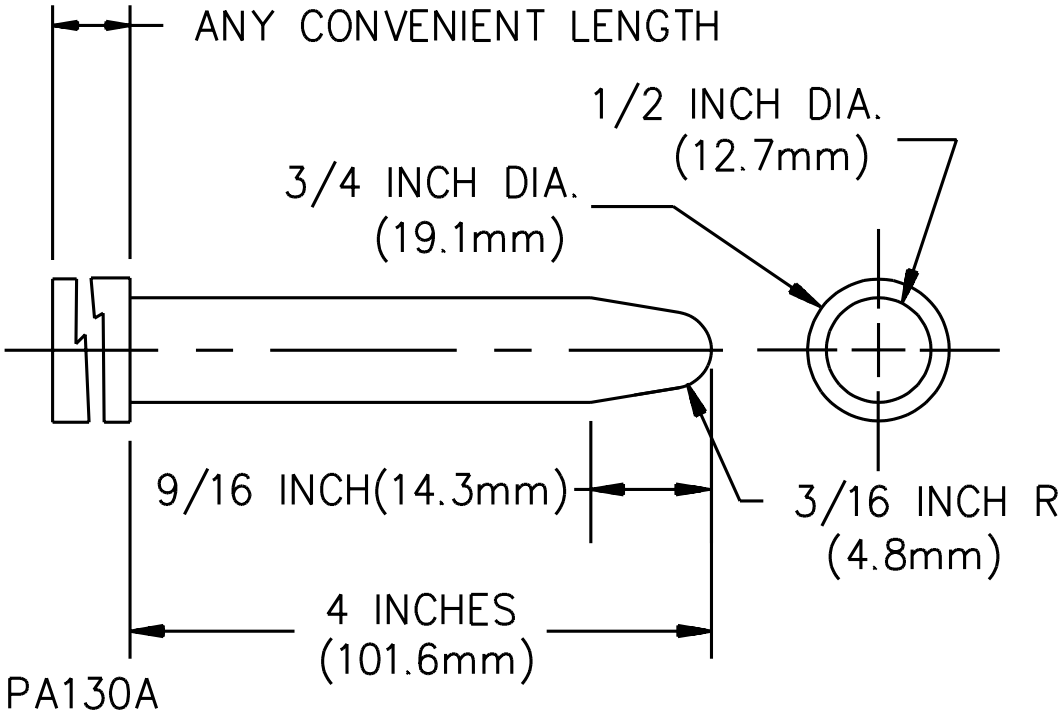

8.2 Regarding a part or wire in an integral enclosure of a motor mentioned in Exception No. 1 to 8.1:

a) An opening that has a minor dimension (see 8.5) less than 3/4 inch (19.1 mm) complies with these requirements if:

1) A moving part cannot be contacted by the probe illustrated in Figure 8.2;

2) Film-coated wire cannot be contacted by the probe illustrated in Figure 8.3;

3) In a directly accessible motor (see 8.6), an uninsulated live part cannot be contacted by the probe illustrated in Figure 8.4; and

4) In an indirectly accessible motor (see 8.6), an uninsulated live part cannot be contacted by the probe illustrated in Figure 8.2.

b) An opening that has a minor dimension of 3/4 inch or more may be used if a part or wire is spaced from the opening as specified in Table 8.1.

UL COPYRIGHTED MATERIAL –
NOT AUTHORIZED FOR FURTHER REPRODUCTION OR
DISTRIBUTION WITHOUT PERMISSION FROM UL
Documents
Document Sharing Hub
Copyright UL
Provided by IHS under license with UL
No reproduction or networking permitted without license from IHS
Full document details: UL 1340 2013
Licensee=North Carolina State Univ/5618801100
Not for Resale, 07/06/2013 20:35:32 MDT

Figure 8.3
Probe for film-coated wire

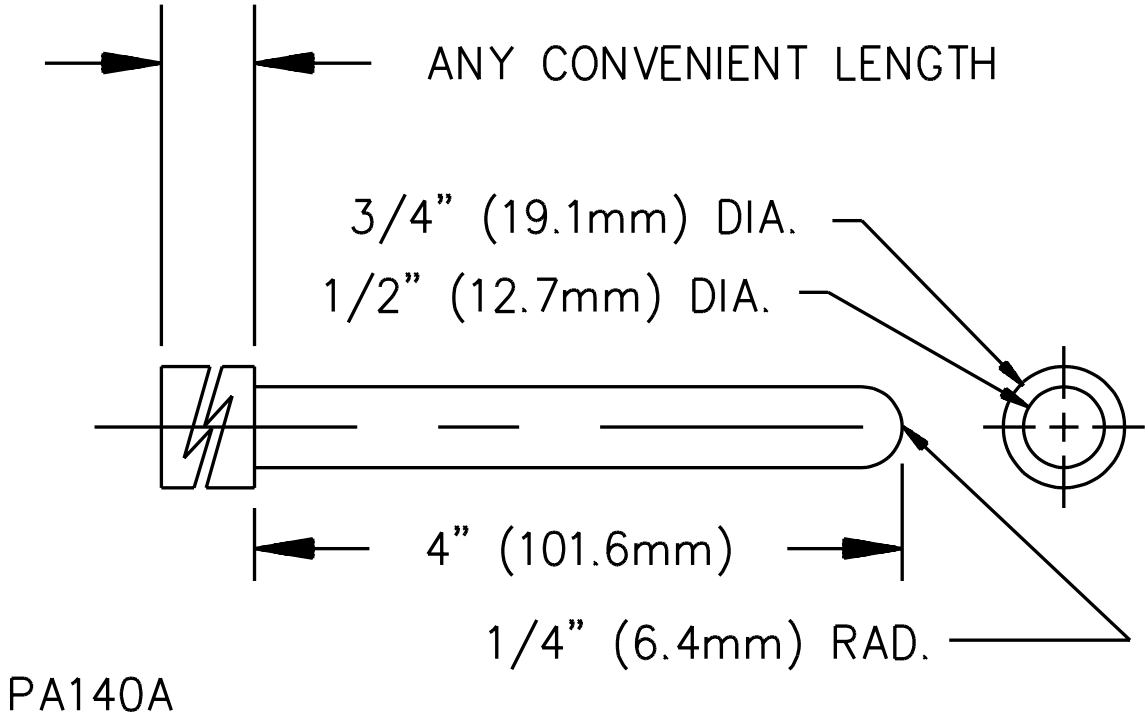

Figure 8.4
IEC articulate probe

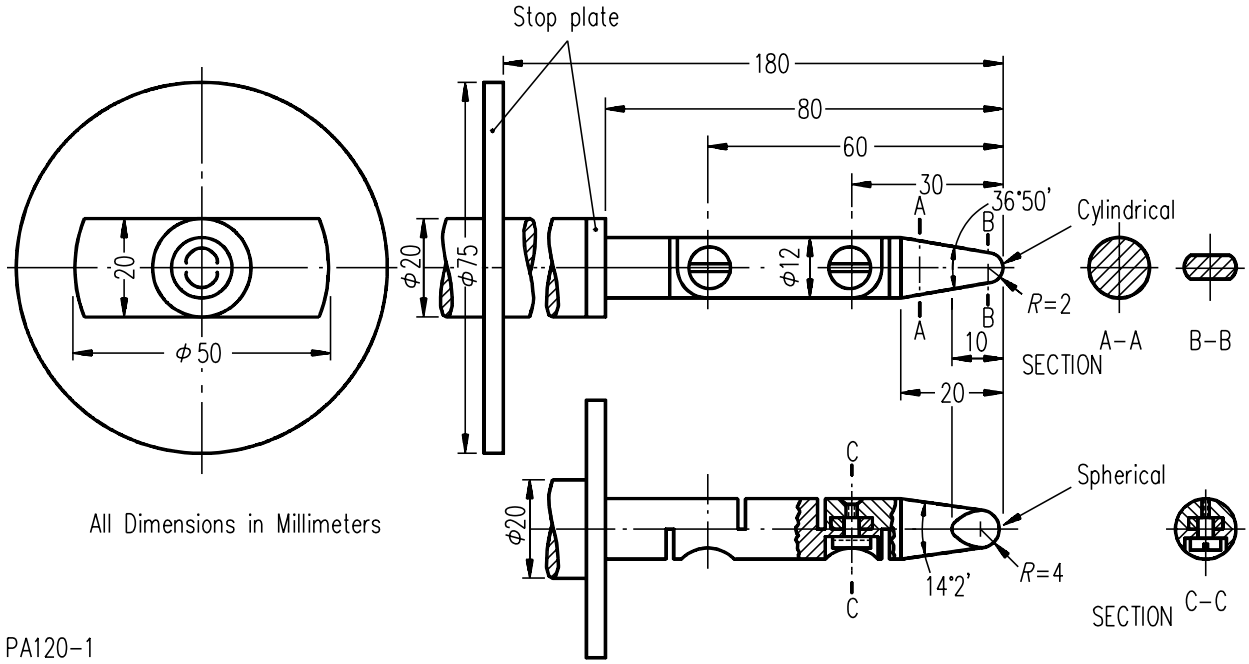

UL COPYRIGHTED MATERIAL –
NOT AUTHORIZED FOR FURTHER REPRODUCTION OR
DISTRIBUTION WITHOUT PERMISSION FROM UL

Documents
Document Sharing Hub

Copyright UL
Provided by IHS under license with UL
No reproduction or networking permitted without license from IHS
Full document details: UL 1340 2013

Licensee=North Carolina State Univ/5618801100
Not for Resale, 07/06/2013 20:35:32 MDT

Table 8.1
Minimum distance from an opening to a part that may involve a risk of electric shock or injury to persons

Minor dimension of opening,[a] inches	(mm)[b]	Minimum distance from opening to part, inches	(mm)[b]
3/4	19.1	4-1/2	114
1	25.4	6-1/2	165
1-1/4	31.8	7-1/2	190
1-1/2	38.1	12-1/2	318
1-7/8	47.6	15-1/2	394
2-1/8	54.0	17-1/2	444

[a] See 8.5.
[b] Between 3/4 and 2-1/8 inches, interpolation is to be used to determine a value between values specified in the table.

8.3 The probes mentioned in 8.1 and 8.2 and illustrated in Figures 8.1 – 8.4 shall be applied to any depth that the opening will permit; and shall be rotated or angled before, during, and after insertion through the opening to any position that is necessary to examine the enclosure. The probes illustrated in Figures 8.1 and 8.4 shall be applied in any possible configuration, and if necessary, the configuration shall be changed after insertion through the opening.

8.4 The probes mentioned in 8.3 and 8.5 shall be used as measuring instruments to evaluate the accessibility provided by an opening, and not as instruments to evaluate the strength of a material; they shall be applied with the minimum force necessary to determine accessibility.

8.5 With reference to the requirements in 8.1 and 8.2, the minor dimension of an opening is the diameter of the largest cylindrical probe having a hemispherical tip that can be inserted through the opening.

8.6 With reference to the requirements in 8.2, an indirectly accessible motor is a motor that is:

a) Accessible only by opening or removing a part of the outer enclosure, such as a guard or panel, that can be opened or removed without using a tool or

b) Located at such a height or is otherwise guarded or enclosed so that it is unlikely to be contacted.

A directly accessible motor is a motor that can be contacted without opening or removing any part or that is located so as to be accessible to contact.

8.7 During the examination of a hoist to determine compliance with the requirements in 8.1 or 8.2, a part of the enclosure that may be opened or removed by the user without using a tool (for example, to attach an accessory or to make an operating adjustment) is to be opened or removed.

8.8 With reference to the requirements in 8.1 and 8.2, insulated brush caps are not required to be additionally enclosed.

UL COPYRIGHTED MATERIAL –
NOT AUTHORIZED FOR FURTHER REPRODUCTION OR
DISTRIBUTION WITHOUT PERMISSION FROM UL
Documents
Document Sharing Hub

Copyright UL
Provided by IHS under license with UL
No reproduction or networking permitted without license from IHS
Full document details: UL 1340 2013
Licensee=North Carolina State Univ/5618801100
Not for Resale, 07/06/2013 20:35:32 MDT

9 Electrical Component Enclosures

9.1 General

9.1.1 An electrical enclosure or enclosure part shall have the necessary strength and rigidity to resist, under conditions of anticipated service, total or partial collapse which may result in:

a) The reduction of spacings, or the loosening or displacement of parts; and

b) Other defects that alone or in combination can result in a risk of fire or electric shock.

9.1.2 The construction of enclosures for individual electrical components, outer enclosures, and combinations of the two is to be considered in determining compliance with the requirement in 9.1.1.

9.1.3 If necessary, an enclosure shall be reinforced or formed to reduce the risk of damage during handling in shipment, installation, and use.

9.1.4 Access to the interior of electrical enclosures shall require the use of tools.

9.1.5 Electrical enclosures shall comply with the Rain Test, Section 33.

9.2 Nonmetallic enclosures

9.2.1 Among the factors that shall be taken into consideration when evaluating the acceptability of a nonmetallic enclosure are:

a) Mechanical strength;

b) Resistance to impact;

c) Moisture-absorptive properties;

d) Combustibility; and

e) Resistance to distortion at temperatures to which the material may be subjected.

Under conditions of normal or abnormal use, the material shall not display a loss of these properties beyond the minimum level of safety as a result of aging. A nonmetallic enclosure is also to be evaluated on the basis of the effect of exposure to water and ultraviolet light.

9.2.2 The mechanical strength of a nonmetallic enclosure or enclosure part shall be at least equivalent to that of a sheet-metal enclosure of the minimum thickness specified in Table 9.1.

UL COPYRIGHTED MATERIAL –
NOT AUTHORIZED FOR FURTHER REPRODUCTION OR
DISTRIBUTION WITHOUT PERMISSION FROM UL

Documents
Document Sharing Hub

Copyright UL
Provided by IHS under license with UL
No reproduction or networking permitted without license from IHS
Full document details: UL 1340 2013

Licensee=North Carolina State Univ/5618801100
Not for Resale, 07/06/2013 20:35:32 MDT

Table 9.1
Thickness of sheet metal for enclosures – carbon steel or stainless steel

Without supporting frame[a]				With supporting frame or equivalent reinforcing[a]				Minimum thickness			
Maximum width,[b] inches	(cm)	Maximum length,[c] inches	(cm)	Maximum width,[b] inches	(cm)	Maximum length, inches	(cm)	Uncoated, inch	(mm)	Metal coated, inch	(mm)
4.0	10.2	Not limited		6.25	15.9	Not limited		0.020[d]	0.51	0.023[d]	0.58
4.75	12.1	5.75	14.6	6.75	17.1	8.25	21.0				
6.0	15.2	Not limited		9.5	24.1	Not limited		0.026[d]	0.66	0.029[d]	0.74
7.0	17.8	8.75	22.2	10.0	25.4	12.5	31.8				
8.0	20.3	Not limited		12.0	30.5	Not limited		0.032	0.81	0.034	0.86
9.0	22.9	11.5	29.2	13.0	33.0	16.0	40.6				
12.5	31.8	Not limited		19.5	49.5	Not limited		0.042	1.07	0.045	1.14
14.0	35.6	18.0	45.7	21.0	53.3	25.0	63.5				
18.0	45.7	Not limited		27.0	68.6	Not limited		0.053	1.35	0.056	1.42
20.0	50.8	25.0	63.5	29.0	73.7	36.0	91.4				
22.0	55.9	Not limited		33.0	83.8	Not limited		0.060	1.52	0.063	1.60
25.0	63.5	31.0	78.7	35.0	88.9	43.0	109.2				
25.0	63.5	Not limited		39.0	99.1	Not limited		0.067	1.07	0.070	1.78
29.0	73.7	36.0	91.4	41.0	104.1	51.0	129.5				
33.0	83.8	Not limited		51.0	129.5	Not limited		0.080	2.03	0.084	2.13
38.0	96.5	47.0	119.4	54.0	137.2	66.0	167.6				
42.0	106.7	Not limited		64.0	162.6	Not limited		0.093	2.36	0.097	2.46
47.0	119.4	59.0	149.9	68.0	172.7	84.0	213.4				
52.0	132.1	Not limited		80.0	203.2	Not limited		0.108	2.74	0.111	2.82
60.0	152.4	74.0	188.0	84.0	213.4	103.0	261.6				
63.0	160.0	Not limited		97.0	246.4	Not limited		0.123	3.12	0.126	3.20
73.0	185.4	90.0	228.6	103.0	261.6	127.0	322.6				

[a] See 9.3.1.4.

[b] The width is the smaller dimension of a rectangular piece of sheet metal that is part of an enclosure. Adjacent surfaces of an enclosure may have supports in common and be made of a single sheet.

[c] Not limited applies only if the edge of the surface is flanged at least 1/2 inch (12.7 mm) or fastened to adjacent surfaces not normally removed in use.

[d] Sheet steel for an enclosure intended for outdoor use – raintight or rainproof – shall not be less than 0.034 inch (0.86 mm) thick if zinc coated and not less than 0.032 inch (0.81 mm) thick if uncoated.

9.2.3 If the dimensional stability of a nonmetallic material is intended to maintain the continuity of the grounding system, an investigation shall be conducted to determine the effect of aging on the material. The result shall show that aging has a minimal effect on the material and poses no risk of fire, electric shock, or injury to persons.

UL COPYRIGHTED MATERIAL –
NOT AUTHORIZED FOR FURTHER REPRODUCTION OR
DISTRIBUTION WITHOUT PERMISSION FROM UL

Documents
Document Sharing Hub

Copyright UL
Provided by IHS under license with UL
No reproduction or networking permitted without license from IHS
Full document details: UL 1340 2013

Licensee=North Carolina State Univ/5618801100
Not for Resale, 07/06/2013 20:35:32 MDT

9.2.4 An enclosure of polymeric material shall comply with the applicable requirements for products that are not categorized as household use only as contained in the Standard for Polymeric Materials – Use in Electrical Equipment Evaluations, UL 746C.

9.2.5 An enclosure of polymeric material shall be subjected to the Resistance to Impact Test described in UL 746C before and after cold conditioning at minus 35°C (minus 31°F) for 3 hours. For products marked in accordance with 45.6, the cold conditioning shall be at 0°C (32°F) for 3 hours. After each test, the enclosure shall comply with 9.1.1.

Exception: A product marked in accordance with 45.7 is not required to be subjected to the cold conditioning.

9.3 Metallic enclosures

9.3.1 General

9.3.1.1 These requirements do not cover the effects of corrosion that might be caused by exposure to the earth or other corrosive agents.

9.3.1.2 Cast metal of an enclosure shall be:

a) At least 1/8 inch (3.2 mm) thick at every point and

b) Greater than 1/8 inch thick at reinforcing ribs and door edges.

Exception: The thickness of die-cast metal may be:

a) Not less than 3/32 inch (2.4 mm) thick for an area greater than 24 square inches (154.8 cm^2) or having any dimensions greater than 6 inches (152 mm) and

b) Not less than 1/16 inch (1.6 mm) thick for an area of 24 square inches or less and having no dimensions greater than 6 inches.

The area limitation may be obtained by the provision of reinforcing ribs subdividing a larger area.

9.3.1.3 Sheet metal of an enclosure shall have a thickness not less than that specified in Tables 9.1 and 9.2.

9.3.1.4 With reference to Tables 9.1 and 9.2, a supporting frame is an angled structure or channel, or folded rigid section of sheet metal, that:

a) Is rigidly attached to the enclosure surface;

b) Has essentially the same outside dimensions as the enclosure surface; and

c) Has sufficient torsional rigidity to resist the bending moments that may be applied by the enclosure surface when it is deflected.

UL COPYRIGHTED MATERIAL –
NOT AUTHORIZED FOR FURTHER REPRODUCTION OR
DISTRIBUTION WITHOUT PERMISSION FROM UL

Documents
Document Sharing Hub

Copyright UL
Provided by IHS under license with UL
No reproduction or networking permitted without license from IHS
Full document details: UL 1340 2013

Licensee=North Carolina State Univ/5618801100
Not for Resale, 07/06/2013 20:35:32 MDT