UL 1419

Underwriters Laboratories Inc.

Standard for Safety

Professional Video and Audio Equipment

Copyright UL
Provided by IHS under license with UL
No reproduction or networking permitted without license from IHS
Licensee=North Carolina State Univ/5618801100
Not for Resale, 07/06/2013 20:31:09 MDT
Full document details: UL 1419 2011

UL COPYRIGHTED MATERIAL –
NOT AUTHORIZED FOR FURTHER REPRODUCTION OR
DISTRIBUTION WITHOUT PERMISSION FROM UL

Documents
Document Sharing Hub

Copyright UL
Provided by IHS under license with UL
No reproduction or networking permitted without license from IHS
Full document details: UL 1419 2011

Licensee=North Carolina State Univ/5618801100
Not for Resale, 07/06/2013 20:31:09 MDT

UL Standard for Safety for Professional Video and Audio Equipment, UL 1419

Third Edition, Dated May 31, 2011

Summary of Topics

This new edition of ANSI/UL 1419 incorporates a revision to 8.8 regarding the use of UL 900 Classified Air Filters.

The revised requirements are substantially in accordance with Proposal(s) on this subject dated January 10, 2011 and March 11, 2011.

All rights reserved. No part of this publication may be reproduced, stored in a retrieval system, or transmitted in any form by any means, electronic, mechanical photocopying, recording, or otherwise without prior permission of UL.

UL provides this Standard ″as is″ without warranty of any kind, either expressed or implied, including but not limited to, the implied warranties of merchantability or fitness for any purpose.

In no event will UL be liable for any special, incidental, consequential, indirect or similar damages, including loss of profits, lost savings, loss of data, or any other damages arising out of the use of or the inability to use this Standard, even if UL or an authorized UL representative has been advised of the possibility of such damage. In no event shall UL's liability for any damage ever exceed the price paid for this Standard, regardless of the form of the claim.

Users of the electronic versions of UL's Standards for Safety agree to defend, indemnify, and hold UL harmless from and against any loss, expense, liability, damage, claim, or judgment (including reasonable attorney's fees) resulting from any error or deviation introduced while purchaser is storing an electronic Standard on the purchaser's computer system.

The requirements in this Standard are now in effect, except for those paragraphs, sections, tables, figures, and/or other elements of the Standard having future effective dates as indicated in the note following the affected item. The prior text for requirements that have been revised and that have a future effective date are located after the Standard, and are preceded by a ″SUPERSEDED REQUIREMENTS″ notice.

UL COPYRIGHTED MATERIAL –
NOT AUTHORIZED FOR FURTHER REPRODUCTION OR
DISTRIBUTION WITHOUT PERMISSION FROM UL

Documents
Document Sharing Hub

Copyright UL
Provided by IHS under license with UL
No reproduction or networking permitted without license from IHS
Full document details: UL 1419 2011

Licensee=North Carolina State Univ/5618801100
Not for Resale, 07/06/2013 20:31:09 MDT

No Text on This Page

UL COPYRIGHTED MATERIAL –
NOT AUTHORIZED FOR FURTHER REPRODUCTION OR
DISTRIBUTION WITHOUT PERMISSION FROM UL

Documents
Document Sharing Hub

Copyright UL
Provided by IHS under license with UL
No reproduction or networking permitted without license from IHS
Full document details: UL 1419 2011

Licensee=North Carolina State Univ/5618801100
Not for Resale, 07/06/2013 20:31:09 MDT

UL 1419

Standard for Professional Video and Audio Equipment

First Edition – November, 1992
Second Edition – March, 1997

Third Edition

May 31, 2011

This ANSI/UL Standard for Safety consists of the Third Edition.

The most recent designation of ANSI/UL 1419 as an American National Standard (ANSI) occurred on May 31, 2011. ANSI approval for a standard does not include the Cover Page, Transmittal Pages, Title Page, or effective date information.

Comments or proposals for revisions on any part of the Standard may be submitted to UL at any time. Proposals should be submitted via a Proposal Request in UL's On-Line Collaborative Standards Development System (CSDS) at http://csds.ul.com.

UL's Standards for Safety are copyrighted by UL. Neither a printed nor electronic copy of a Standard should be altered in any way. All of UL's Standards and all copyrights, ownerships, and rights regarding those Standards shall remain the sole and exclusive property of UL.

COPYRIGHT © 2011 UNDERWRITERS LABORATORIES INC.

UL COPYRIGHTED MATERIAL –
NOT AUTHORIZED FOR FURTHER REPRODUCTION OR
DISTRIBUTION WITHOUT PERMISSION FROM UL

Documents
Document Sharing Hub

Copyright UL
Provided by IHS under license with UL
No reproduction or networking permitted without license from IHS
Full document details: UL 1419 2011

Licensee=North Carolina State Univ/5618801100
Not for Resale, 07/06/2013 20:31:09 MDT

No Text on This Page

UL COPYRIGHTED MATERIAL –
NOT AUTHORIZED FOR FURTHER REPRODUCTION OR
DISTRIBUTION WITHOUT PERMISSION FROM UL

Documents
Document Sharing Hub

Copyright UL
Provided by IHS under license with UL
No reproduction or networking permitted without license from IHS
Full document details: UL 1419 2011

Licensee=North Carolina State Univ/5618801100
Not for Resale, 07/06/2013 20:31:09 MDT

CONTENTS

INTRODUCTION

1 Scope 7
2 Glossary 8
3 Components 10
4 Units of Measurement 10
5 References 10

CONSTRUCTION

6 General 10
6.1 Details 10
6.2 Systems 11
7 Frame and Enclosure 11
7.1 General 11
7.2 Doors or covers 12
7.3 External materials – Option A (Construction) 12
7.4 Internal materials – Option A (Construction) 13
7.5 Enclosure openings 13
7.6 Louvers 14
7.7 Enclosure bottom openings 15
7.8 Top openings 18
7.9 Material requirements – Option B (Performance) 18
8 Equipment Intended to be Installed in Restricted Access Areas 19
9 Equipment Intended to be Installed in Permanent Outdoor Locations 20
10 Mechanical assembly 21
11 Supply Connections – Permanently Connected Equipment 21
11.1 General 21
11.2 Separation of circuits 22
11.3 Wiring terminals 23
12 Audio Output Connections 24
13 Cord-Connected Equipment 25
13.1 Cords and plugs 25
13.2 Equipment coupler 26
13.3 Cord strain relief 26
13.4 Cord and wire routing 27
13.5 Attachment plug 27
13.6 Bushings 27
14 Auxiliary Power Connections 28
15 Printed Wiring Boards 28
16 Receptacles 28
17 Switches 29
18 Protective Devices 29
18.1 General 29
18.2 Fuses 29
18.3 Battery circuit protection 30
19 Across-the-Line and Isolating Components 30
20 Batteries 30
20.1 General 30
20.2 Batteries containing liquids or gases 31

UL COPYRIGHTED MATERIAL –
NOT AUTHORIZED FOR FURTHER REPRODUCTION OR
DISTRIBUTION WITHOUT PERMISSION FROM UL

Documents
Document Sharing Hub

Copyright UL
Provided by IHS under license with UL
No reproduction or networking permitted without license from IHS
Full document details: UL 1419 2011

Licensee=North Carolina State Univ/5618801100
Not for Resale, 07/06/2013 20:31:09 MDT

20.3 Lithium batteries . . . 31
21 Motors . . . 31
22 Lasers and X- Radiation . . . 31
23 Sleeving, Tape, Tubing, and Wire Insulation . . . 31
23.1 General . . . 31
23.2 Mechanical protection . . . 32
24 Remote Control and Interconnecting Cables . . . 33
25 Splices and Connections . . . 33
25.1 General . . . 33
25.2 Wire wrapped connections . . . 34
26 Spacings . . . 35
27 Grounding . . . 38
27.1 General . . . 38
27.2 Cord-connected equipment . . . 39
27.3 Permanently connected equipment . . . 39
28 Risk of Electric Shock . . . 41
28.1 Accessible live parts . . . 41
29 Leakage Current . . . 41
30 Risk of Fire . . . 42
31 Accessibility . . . 42
31.1 General . . . 42
31.2 Guard and barrier insulating material . . . 44
32 Interlocks . . . 45
33 Servicing . . . 45
34 Protection During User Servicing . . . 46
35 Protection of Service Personnel For Equipment Not Provided With Complete Enclosures . . . 47
36 Implosion Protection . . . 47
36.1 General . . . 47
36.2 Mechanical protection . . . 47
36.3 Cathode-ray tube (CRT) enclosure opening . . . 48
36.4 CRT neck protection . . . 48

PERFORMANCE

37 General . . . 49
37.1 Details . . . 49
37.2 Voltmeters . . . 49
37.3 Leads, connectors, and components . . . 49
37.4 Cheesecloth indicators . . . 49
37.5 Supply circuit voltage and frequency . . . 50
38 Power Input Test . . . 51
39 X-Radiation Test . . . 53
39.1 General . . . 53
40 Grounding Impedance Test . . . 54
41 Equipment Leakage Current Test . . . 54
41.1 General . . . 54
41.2 Leakage current measurements for equipment with multiple (redundant) power supplies . . . 58
42 Temperature Test . . . 58
42.1 General . . . 58
42.2 Thermal equilibrium . . . 58
42.3 Equipment test conditions . . . 60
42.4 Equipment operating conditions . . . 60

UL COPYRIGHTED MATERIAL –
NOT AUTHORIZED FOR FURTHER REPRODUCTION OR
DISTRIBUTION WITHOUT PERMISSION FROM UL
Documents
Document Sharing Hub

Copyright UL
Provided by IHS under license with UL
No reproduction or networking permitted without license from IHS
Full document details: UL 1419 2011
Licensee=North Carolina State Univ/5618801100
Not for Resale, 07/06/2013 20:31:09 MDT

42.5 Thermocouples 61
42.6 Winding temperature measurement 61
42.7 Ambient temperatures 62
42.8 Rack mounted equipment 62
43 Dielectric Voltage-Withstand Test 63
43.1 General 63
43.2 Breakdown 65
44 Abnormal Operation Test 65
44.1 General 65
44.2. Supply circuit fuse rating 65
44.3 Equipment supporting surface 65
44.4 Cheesecloth indicator 65
44.5 Fuse indicator 65
44.6 User-removable parts 65
44.7 Polarization 66
44.8 Test duration 66
44.9 Unacceptable conditions 66
44.10 Circuit interruption 67
45 Tests for Remote Control and Interconnecting Cables 67
45.1 Cable flexing test 67
45.2 Cable crush test 67
46 Strain Relief Test 67
46.1 Power supply cord and interconnecting cable 67
47 Battery and Battery Circuit Tests – Electrical 68
47.1 Battery overcharge test 68
47.2 Battery discharge test 68
48 Battery Tests – Mechanical 68
48.1 Battery drop test 68
48.2 Battery oven test 68
48.3 Battery test results 69
49 Battery Supply Test 69
50 Vacuum Tube Filament Short Circuit Test 69
51 Test for Limited-Power Circuit 69
52 Transformer Short Circuit and Overload Tests 70
53 Power Supply Test 71
54 Component Abnormal Operation Test 72
55 Multiple Voltage Equipment Test 72
56 Ground Printed Wiring Board (PWB) Trace Test 72
57 Strength of Enclosure Tests 73
57.1 Mechanical tests – general 73
57.2 Enclosure loading 74
57.3 Pressure 74
57.4 Impact 75
57.5 Mold stress relief test 76
58 Personal Injury Tests 77
58.1 General 77
58.2 Force stability test 77
58.3 Cart or stand loading 78
58.4 Handle strength 78
58.5 Mounting means tests 79
59 Audio Output Maximum Voltage Test 79

UL COPYRIGHTED MATERIAL –
NOT AUTHORIZED FOR FURTHER REPRODUCTION OR
DISTRIBUTION WITHOUT PERMISSION FROM UL

Documents
Document Sharing Hub

Copyright UL
Provided by IHS under license with UL
No reproduction or networking permitted without license from IHS
Full document details: UL 1419 2011

Licensee=North Carolina State Univ/5618801100
Not for Resale, 07/06/2013 20:31:09 MDT

MANUFACTURING AND PRODUCTION-LINE TESTS

60 Tests by the Manufacturer 80
60.1 Production-line dielectric voltage-withstand test 80
60.2 A-C production-line test 81
60.3 D-C production-line test 82
60.4 Continuity of grounding connection 82
60.5 Polarization verification 82

MARKINGS

61 General 82
62 Marking Details 83
62.1 Equipment identification 83
62.2 Electrical rating 83
62.3 Factory identification 84
62.4 Accessory identification 84
62.5 Parallel-slot-type receptacle 84
62.6 Nonstandard-type receptacle 84
62.7 X-radiation 85
62.8 Auxiliary power connections 85
62.9 Multiple-voltage equipment 86
62.10 Supply circuit voltage selector 86
62.11 Service protection 86
62.12 Fuse rating 86
62.13 Operator replaceable fuse replacement caution marking 87
62.14 High leakage current marking 88
62.15 Multiple power supply cord de-energization marking 88
62.16 Audio output 88
62.17 High temperature heat sink 89
62.18 Multiple (redundant) power supply marking 89
62.19 Mounting surface 90
62.20 Restricted access area equipment service protection 90
62.21 Equipment rack system 90
62.22 Double-insulated equipment 90

INSTRUCTIONS

63 General 90
64 Installation Instructions 91

APPENDIX A

Standards for Components A1

UL COPYRIGHTED MATERIAL –
NOT AUTHORIZED FOR FURTHER REPRODUCTION OR
DISTRIBUTION WITHOUT PERMISSION FROM UL

Documents
Document Sharing Hub

Copyright UL
Provided by IHS under license with UL
No reproduction or networking permitted without license from IHS
Full document details: UL 1419 2011

Licensee=North Carolina State Univ/5618801100
Not for Resale, 07/06/2013 20:31:09 MDT

INTRODUCTION

1 Scope

1.1 These requirements cover video and audio equipment operated and maintained by trained personnel under the conditions of controlled access.

1.2 These requirements cover such equipment as video tape recorders, audio/video editing equipment, audio/video receiving and processing equipment, signal transmission equipment, television cameras, video digitizers, video monitors, metering equipment and similar equipment.

1.3 This Standard also covers auxiliary equipment and accessories which by themselves may not perform the desired function of the equipment outlined in 1.2 but are used in addition to or as a supplement to the basic equipment (remote controls, convertors, stands, etc.).

1.4 These requirements cover equipment rated 600 volts or less for use in accordance with the National Electrical Code, ANSI/NFPA 70.

1.5 Equipment employing circuits that are intended to connect directly to a telecommunications network shall also comply with the applicable requirements in the following relevant standards:

a) Standard for Safety of Information Technology Equipment, Including Electrical Business Equipment, CSA C22.2 No. 950-95/UL 1950, Third Edition

b) Standard for Information Technology Equipment, UL 60950

c) Standard for Information Technology Equipment Safety – Part 1: General Requirements, UL 60950-1

d) Standard for Audio-Video Products and Accessories, UL 1492

e) Standard for Audio/Video and Musical Instrument Apparatus for Household, Commercial, and Similar General Use, UL 6500

f) Standard for Audio, Video, and Similar Electronic Apparatus-Safety Requirements, UL 60065

1.6 These requirements do not cover products that are intended for household or commercial use.

UL COPYRIGHTED MATERIAL –
NOT AUTHORIZED FOR FURTHER REPRODUCTION OR
DISTRIBUTION WITHOUT PERMISSION FROM UL

Documents
Document Sharing Hub

Copyright UL
Provided by IHS under license with UL
No reproduction or networking permitted without license from IHS
Full document details: UL 1419 2011

Licensee=North Carolina State Univ/5618801100
Not for Resale, 07/06/2013 20:31:09 MDT

2 Glossary

2.1 For the purpose of this Standard the following definitions apply.

2.2 ACCESSIBLE PART – A part so located that it can be contacted by means of a probe (see Figure 31.1).

2.3 ADJUSTABLE CONTROL – A control provided for making adjustments necessary to render the equipment capable of performing its intended functions.

2.4 BRANCH CIRCUIT – A branch circuit is that portion of the building wiring system beyond the final overcurrent device on the power distribution panel protecting the circuit to the field wiring terminals in permanently connected equipment or to the receptacle outlet for cord connected equipment.

2.5 CART – A stand (see Personal Injury Tests, Section 58) provided with casters, wheels, or rollers to make it mobile.

2.6 CASTER – Any roller or swiveled wheel attached to a cart, stand, or equipment that makes the cart, stand, or equipment mobile.

2.7 CLEARANCE DISTANCE – The shortest distance measured through air between conductive parts.

2.8 CREEPAGE DISTANCE – The shortage distance measured over the surface of insulation between conductive parts.

2.9 CORD-CONNECTED EQUIPMENT – Equipment intended to be connected to the branch circuit by means of a flexible cord.

2.10 FIBER – Where the term ″fiber″ is used in this standard to denote a material usually used as electrical insulation, vulcanized fiber is meant.

2.11 FIELD-WIRING TERMINAL – Any terminal to which a supply or other wire can be connected by an installer in the field is a field wiring terminal unless the wire is provided as part of the equipment and a connector, soldering lug, soldering loop, crimped eyelet, pressure terminal, or other means for making the connection is factory-assembled to the wire.

2.12 GROUND – Earth ground, unless otherwise specified.

2.13 HAND-HELD EQUIPMENT – Portable equipment that is held in one or both hands during normal use.

2.14 HANDLE – A part that is designed to be grasped by the hand or used by hand or machine for lifting or moving a product.

2.15 INTERLOCK – A mechanism that deenergizes parts involving a risk of electric shock or that stops moving parts before they become accessible to the user when the enclosure of the part is opened or a cover is removed.

2.16 LEAKAGE CURRENT – All currents, including capacitively coupled currents that flow through a person upon contact between accessible conductive surfaces of a product and ground or other accessible surfaces of a product.

UL COPYRIGHTED MATERIAL –
NOT AUTHORIZED FOR FURTHER REPRODUCTION OR
DISTRIBUTION WITHOUT PERMISSION FROM UL

Documents
Document Sharing Hub

Copyright UL
Provided by IHS under license with UL
No reproduction or networking permitted without license from IHS
Full document details: UL 1419 2011

Licensee=North Carolina State Univ/5618801100
Not for Resale, 07/06/2013 20:31:09 MDT

2.17 MEASUREMENT INDICATION UNIT (MIU) – The output voltage across the meter in the measurement instrument in Figure 41.2, in millivolts RMS, divided by 500 ohms. MIUs are related to physiological effects when electric current flows through the human body. At low frequency, the number of MIUs that is obtained by dividing the output voltage, in millivolts, by 500 ohms, equals the current, in milliamperes, through the measuring instrument. The reading may not be a direct indication of the RMS or other common amplitude quantifier of leakage current when the leakage current is of a complex waveform or frequency other than 50 or 60 Hz. At high frequency, the meter indication of MIUs is less than the number of milliamperes through the measuring instrument. For example, at 100 Khz, 0.5 MIU occurs when the actual current through the measuring instrument, shown in Fig. 41.2, is 70 mA. At any frequency, the acceptability of the leakage current can be determined by simply comparing the number of MIU's to the MIU limit.

2.18 MINOR DIMENSION OF OPENING – The minor dimension of an opening is the diameter of the largest sphere that can pass through the opening.

2.19 MULTIPLE (REDUNDANT) POWER SUPPLIES – Two or more power supplies, that are duplicates of each other, where one serves as a basic power source and the other(s) as back - up(s) should the basic power source become inoperative.

2.20 ORDINARY TOOLS – Flat-bladed and cross-head screwdrivers, nut drivers, and pliers.

2.21 PERMANENT OUTDOOR LOCATION – An unprotected location exposed to weather wherein the equipment is intended to be permanently installed and operated.

2.22 PORTABLE EQUIPMENT – Cord and plug connected equipment that weighs less than or equal to 18.2 kg (40 lb) and has no provision for permanent mounting and can be moved from one place to another without the use of carts or other assisting equipment.

2.23 POWER AMPLIFIERS – Equipment capable of sufficiently increasing the amplitude or power of a low level electric audio signal to drive a speaker. Equipment may be portable, rack mounted or permanently installed, with output terminals for connection to speaker loads, or with self contained speakers.

2.24 POWER-SUPPLY CORD – The cord provided to connect the equipment to the branch circuit.

2.25 PRIMARY CIRCUIT – Circuit that is conductively connected to the supply circuit.

2.26 PROBE – An instrument used to determine accessibility. See Figure 31.1.

2.27 RACK-MOUNTED EQUIPMENT – Equipment that is provided with means for rack mounting.

2.28 SECONDARY CIRCUIT – Circuit that is conductively connected to the secondary winding of an isolating transformer.

2.29 UNINSULATED LIVE PART – A conductive part that involves a risk of fire or electric shock.

2.30 UNLIMITED POWER CIRCUIT – A circuit involving more than 240 W.

2.31 USER SERVICING – Servicing which can occur outside the enclosure in areas where uninsulated live parts are not accessible. See 33.1 for examples of user servicing.

UL COPYRIGHTED MATERIAL –
NOT AUTHORIZED FOR FURTHER REPRODUCTION OR
DISTRIBUTION WITHOUT PERMISSION FROM UL

Documents
Document Sharing Hub

Copyright UL
Provided by IHS under license with UL
No reproduction or networking permitted without license from IHS
Full document details: UL 1419 2011

Licensee=North Carolina State Univ/5618801100
Not for Resale, 07/06/2013 20:31:09 MDT

3 Components

3.1 Except as indicated in 3.2 a component of a product covered by this standard shall comply with the requirements for that component. See Appendix A for a list of standards covering components used in the products covered by this standard.

3.2 A component is not required to comply with a specific requirement that:

a) Involves a feature or characteristic not required in the application of the component in the product covered by this standard, or

b) Is superseded by a requirement in this standard.

3.3 A component shall be used in accordance with its rating established for the intended conditions of use.

3.4 Specific components are incomplete in construction features or restricted in performance capabilities. Such components are intended for use only under limited conditions, such as certain temperatures not exceeding specified limits, and shall be used only under those specific conditions.

4 Units of Measurement

4.1 Values stated without parentheses are the requirement. Values in parentheses are explanatory or approximate information.

4.2 Unless indicated otherwise all voltage and current values mentioned in this Standard are root-mean-square (rms).

5 References

5.1 Any undated reference to a code or standard appearing in the requirements of this standard shall be interpreted as referring to the latest edition of that code or standard.

CONSTRUCTION

6 General

6.1 Details

6.1.1 The construction of the equipment shall be such that:

a) Intended use and user servicing does not result in a risk of fire, electric shock, or injury to persons;

b) The materials and components are used within their electrical, mechanical, and temperature limits; and

c) The assembly protects the components and wiring from being displaced or damaged.

UL COPYRIGHTED MATERIAL –
NOT AUTHORIZED FOR FURTHER REPRODUCTION OR
DISTRIBUTION WITHOUT PERMISSION FROM UL

Documents
Document Sharing Hub

Copyright UL
Provided by IHS under license with UL
No reproduction or networking permitted without license from IHS
Full document details: UL 1419 2011

Licensee=North Carolina State Univ/5618801100
Not for Resale, 07/06/2013 20:31:09 MDT

6.1.2 The materials and components referred to in 6.1.1 and in other requirements are those involving a risk of fire, electric shock, or injury to persons and are so considered unless specifically indicated otherwise.

6.1.3 The equipment shall comply with either Option A (Construction) or Option B (Performance) indicated in Table 6.1.

6.2 Systems

6.2.1 For a system that is comprised of two or more interconnected devices, each device may be evaluated to either Option A or Option B in Table 6.1.

Table 6.1
Product evaluation options

Option	240 W determination[a,b,c]	Component Tests > 240 W Circuitry[a,b,d]	Table 7.1[b]	7.3 – 7.7	Table 7.3[b]
A (Construction)					
Primary	Yes	Yes	Yes	Yes	No
Secondary	No	No	Yes	Yes	No
Enclosure and other parts	N/A	N/A	Yes	Yes	No
B (Performance)					
Primary	Yes	Yes	No	No	Yes
Secondary	Yes	Yes	No	No	Yes
Enclosure and other parts	N/A	N/A	No	No	Yes

[a] Does not apply to components and parts of Power Supplies that comply with applicable requirements in relevant UL Standards[i] such as UL 813, UL 1012, UL 1310, UL 1492, UL 1950, UL 60950, UL 60950-1, UL 6500, and UL 60065.

[b] Does not apply to primary and secondary circuits supplied by a power supply as indicated in note [a] with a National Electrical Code Class 2 output.

[c] Refer to Test for Limited-Power Circuit, Section 51, for 240 W determination.

[d] Refer to Power Supply Test, Section 53 and Component Abnormal Operation Test, Section 54, for Component Testing.

[i]Any power supply used shall be used in accordance with its Conditions of Acceptability.

7 Frame and Enclosure

7.1 General

7.1.1 The enclosures, guards, and barriers of the equipment shall be complete, or completion of the enclosures, guards, and barriers shall be attained when the equipment is combined during installation.

7.1.2 Required enclosures, guards, and barriers shall be capable of being removed and replaced with a minimum of effort if removal is necessary for servicing the protected parts.

7.1.3 An enclosure, guard, and barrier shall have the strength and rigidity to resist the abuses likely to be encountered during intended use without increasing the risk of fire, electric shock, electrical energy-high current levels, or injury to persons due to total or partial collapse, with resulting reduction of spacings to less than required, or the loosening, displacement, or exposure of parts, or other serious defects.

UL COPYRIGHTED MATERIAL –
NOT AUTHORIZED FOR FURTHER REPRODUCTION OR
DISTRIBUTION WITHOUT PERMISSION FROM UL

Documents
Document Sharing Hub

Copyright UL
Provided by IHS under license with UL
No reproduction or networking permitted without license from IHS
Full document details: UL 1419 2011

Licensee=North Carolina State Univ/5618801100
Not for Resale, 07/06/2013 20:31:09 MDT

7.1.4 The strength and rigidity of the enclosure is to be judged by the Strength of Enclosure Tests, Section 57.

7.1.5 A handle or handles intended to support hand carried or hand operated equipment shall be subjected to the Handle Strength Test as described in 58.4.

7.2 Doors or covers

7.2.1 If part of an enclosure consists of a door or cover leading to an operator access area, one of the following requirements shall apply:

a) Either the door or cover shall be interlocked to comply with the requirements in 32.1; or

b) The door or cover, although intended to be opened by the operator, shall comply with both the following conditions:

1) It shall not be removable by the operator from the enclosure;

2) It shall be provided with a means to keep it closed during normal operation.

7.3 External materials – Option A (Construction)

7.3.1 Materials such as steel, aluminum, glass, and other similar materials are to be used for the enclosure, guard, or cabinet of the equipment. Glass shall be heat resistant, tempered, wired, or laminated. Other materials may be used for part or all of an enclosure, if they comply with the requirements in the Standard for Polymeric Materials– Use in Electrical Equipment Evaluation, UL 746C. The accessibility need not be investigated as part of the enclosure flammability – 130 mm (5-inch) Flame Test as required in UL 746C. See Table 7.1.

Exception: The enclosure materials of portable equipment may be rated minimum V-2. See Table 7.1

Table 7.1
Material requirements – Option A

Application	Flammability[c,d]	Properties of material
Section		
A. Nonportable enclosures	b	b
B. Portable enclosure	V-2	–
C. Internal parts[e,g]	V-2	–
D. External Parts[e,f,g]	HB	–

[a] These requirements do not apply to the internal insulating systems of components or where component requirements exist.

[b] Must comply with flammability and properties of materials requirements in UL 746C except accessibility after flame test.

[c] The flammability classifications V-0, V-1, V-2, and HB are to be determined by the tests described in the Standard for Tests for Flammability of Plastic Material for Parts in Devices and Appliances, UL 94. For enclosures, a material classified using 3.2 mm thick bar specimens can be accepted in lesser thicknesses in the end product. For other parts, a material classified using 1.6 mm thick bar specimens can be accepted in lesser thicknesses in the end product.

[d] For an assembly, the test parameters according to Table 7.1 can consist of the assembly and can be tested as finished parts, or test assemblies can be cut from finished parts. In the case of small parts that might be consumed before the test is completed, large pieces of the same material can be tested provided that they represent the same or lesser thickness than the part in question. None of the larger pieces are to be entirely consumed. Test assemblies or a section thereof that are not flat stock pieces are to be positioned in what is considered to be the worst position in the application.

UL COPYRIGHTED MATERIAL –
NOT AUTHORIZED FOR FURTHER REPRODUCTION OR
DISTRIBUTION WITHOUT PERMISSION FROM UL

Table 7.1 Continued on Next Page

Documents
Document Sharing Hub

Copyright UL
Provided by IHS under license with UL
No reproduction or networking permitted without license from IHS
Full document details: UL 1419 2011

Licensee=North Carolina State Univ/5618801100
Not for Resale, 07/06/2013 20:31:09 MDT

Table 7.1 Continued

Application	Flammability[c,d]	Properties of material
Section		
[e] The requirements that materials possess certain flammability classifications do not apply to small parts. For the purpose of these requirements, a small part is one which: 1) The maximum dimension does not exceed 60 mm, and 2) The volume does not exceed 8000 mm^3, and 3) is located where it could not act as a bridge between a source of arcing or ignition and other ignitable parts. [f] Those parts outside required enclosure parts. [g]Internal and external parts may consist of insulating materials, printed wiring boards, connectors, and the like.		

7.4 Internal materials – Option A (Construction)

7.4.1 All combustible material used within a fire containment enclosure shall be rated in accordance with Table 7.1.

7.4.2 All materials located in circuits not involving a risk of fire and segregated from parts involving a risk of fire by a barrier with a minimum flammability rating of V-2 may be rated minimum HB.

Exception: All materials located in an enclosure constructed of steel or aluminum, or material with a minimum 5V flammability rating and containing no openings may be rated HB without the use of a barrier.

7.4.3 Flammability requirements do not apply to polymeric materials, printed wiring boards and wiring within an enclosure having a volume of $0.06m^3$ or less, consisting totally of metal and having no ventilation openings, or within a sealed unit containing an inert gas.

7.5 Enclosure openings

7.5.1 Enclosure openings over parts involving a risk of fire or electric shock or over parts not involving a risk of fire or electric shock that are not separated from such parts by a barrier complying with 7.3.1 and having openings only allowing for lead passage shall comply with the requirements in 7.6.1 – 7.8.1, and Figure 7.1.

UL COPYRIGHTED MATERIAL –
NOT AUTHORIZED FOR FURTHER REPRODUCTION OR
DISTRIBUTION WITHOUT PERMISSION FROM UL

Documents
Document Sharing Hub

Copyright UL
Provided by IHS under license with UL
No reproduction or networking permitted without license from IHS
Full document details: UL 1419 2011

Licensee=North Carolina State Univ/5618801100
Not for Resale, 07/06/2013 20:31:09 MDT

Figure 7.1
Cross sections of top-enclosure designs

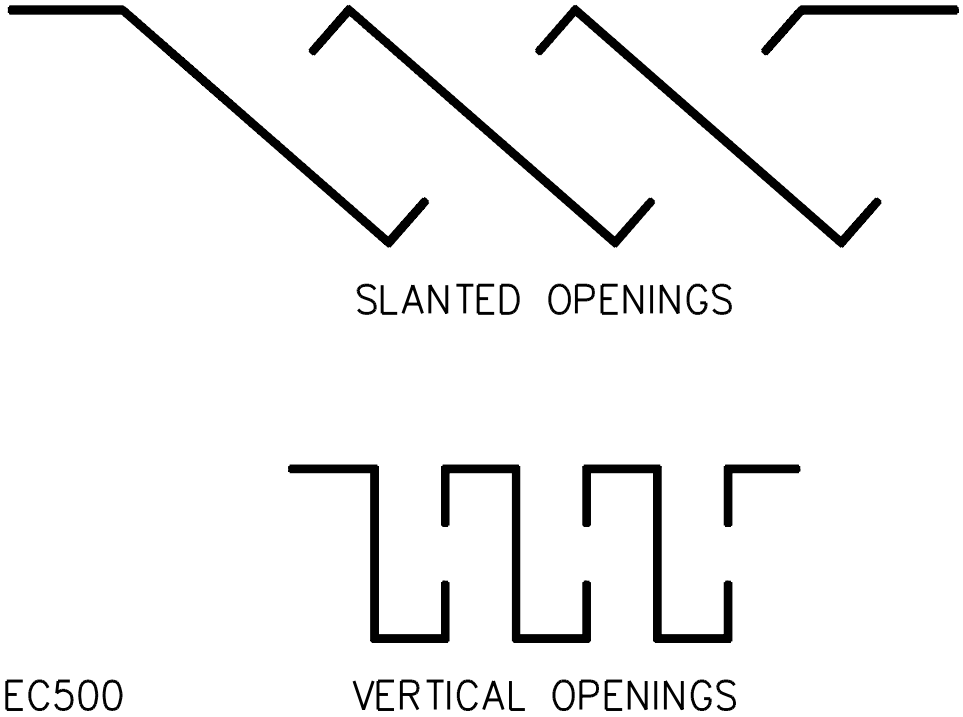

7.6 Louvers

7.6.1 An opening in the front, back or sides of an enclosure shall be shaped and located so that a falling object cannot pass through the opening in a vertical direction. Louvers may be used if shaped to deflect an external falling object outward. See Figure 7.2.

UL COPYRIGHTED MATERIAL –
NOT AUTHORIZED FOR FURTHER REPRODUCTION OR
DISTRIBUTION WITHOUT PERMISSION FROM UL

Documents
Document Sharing Hub

Copyright UL
Provided by IHS under license with UL
No reproduction or networking permitted without license from IHS
Full document details: UL 1419 2011

Licensee=North Carolina State Univ/5618801100
Not for Resale, 07/06/2013 20:31:09 MDT

Figure 7.2
Louvers

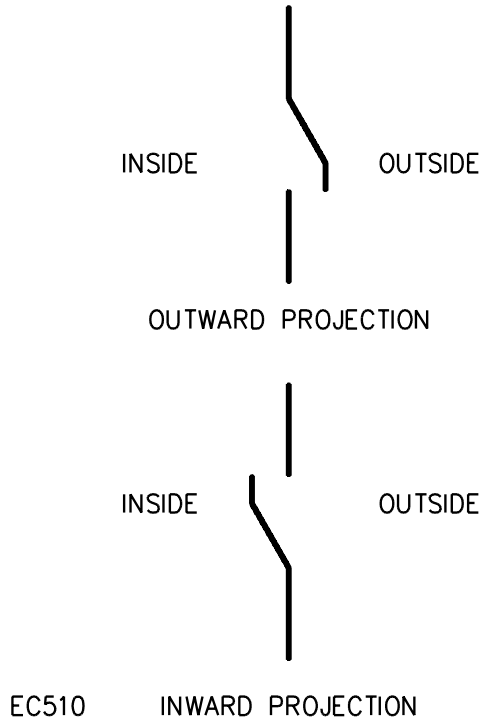

7.7 Enclosure bottom openings

7.7.1 Ventilation openings may be provided in the bottom of an enclosure under materials that are not rated V-1 or less flammable if the openings are constructed so that materials do not fall directly from the interior of the equipment onto the openings. Other bottom opening constructions that may be used are those that incorporate a perforated metal plate as described in Table 7.2, or a galvanized or stainless steel screen having a mesh not greater than 2 by 2 mm and a wire diameter of not less than 0.45 mm.

Table 7.2
Perforated metal plates

Minimum thickness		Maximum diameter of holes		Minimum spacings of holes center to center		
mm	(inch)	mm	(inch)	mm	(inch)	
0.66	(0.026)	1.14	(0.045)	1.70	(0.067)	233 holes per inch^2 (645 mm^2)
0.66	(0.026)	1.19	(0.047)	2.36	(0.093)	
0.81	(0.032)	1.91	(0.075)	3.18	(0.125)	72 holes per inch^2 (645 mm^2)
0.91	(0.036)	1.60	(0.063)	2.77	(0.109)	
0.91	(0.036)	1.98	(0.078)	3.18	(0.125)	
1.00	(0.039)	1.60	(0.063)	2.77	(0.109)	
1.00	(0.039)	2.00	(0.079)	3.00	(0.118)	

7.7.2 The bottom of the enclosure under areas containing only materials rated V-1 or less flammable may have openings no larger than 6.4 mm (1/4 inch) square. Openings that are not square may be provided if they do not have an area greater than 40 mm^2 (1/16 inch^2).

UL COPYRIGHTED MATERIAL –
NOT AUTHORIZED FOR FURTHER REPRODUCTION OR
DISTRIBUTION WITHOUT PERMISSION FROM UL

Documents
Document Sharing Hub

Copyright UL
Provided by IHS under license with UL
No reproduction or networking permitted without license from IHS
Full document details: UL 1419 2011

Licensee=North Carolina State Univ/5618801100
Not for Resale, 07/06/2013 20:31:09 MDT

7.7.3 The bottom of an enclosure shall consist of a complete or partial bottom enclosure under a component, groups of components, or assemblies, as shown in Figure 7.3, that complies with the ventilation opening requirements in 7.7.1 and 7.7.2.

Exception No. 1: Units may have openings without limitation on their size and number in areas that contain only wires, cables, plugs, receptacles, and impedance-protected and thermally protected motors.

Exception No. 2: Equipment intended to be mounted on a concrete floor or other noncombustible surface need not be provided with a bottom enclosure if marked in accordance with 62.19.1.

UL COPYRIGHTED MATERIAL –
NOT AUTHORIZED FOR FURTHER REPRODUCTION OR
DISTRIBUTION WITHOUT PERMISSION FROM UL

Documents
Document Sharing Hub

Copyright UL
Provided by IHS under license with UL
No reproduction or networking permitted without license from IHS
Full document details: UL 1419 2011

Licensee=North Carolina State Univ/5618801100
Not for Resale, 07/06/2013 20:31:09 MDT

Figure 7.3
Enclosure bottom

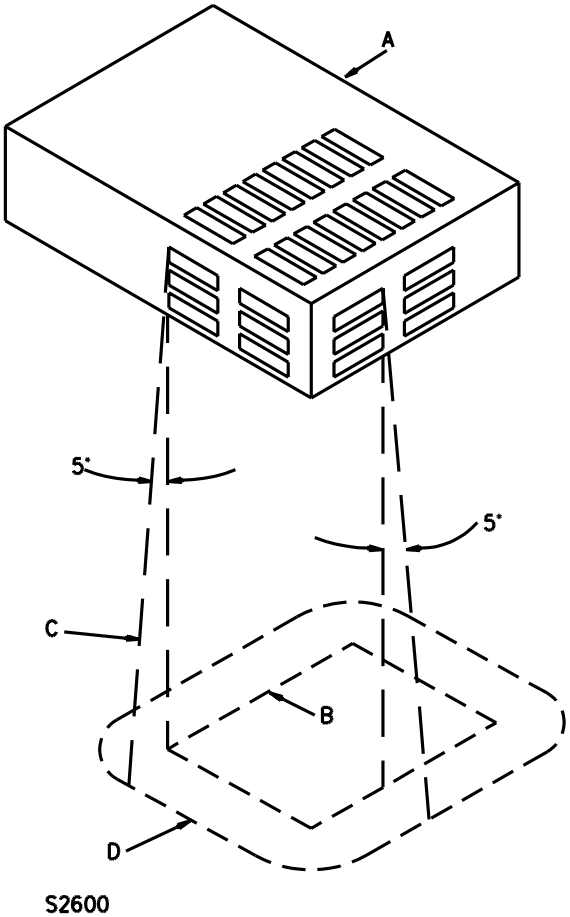

NOTES –

1) The entire component under which an enclosure (flat or dished with or without a lip or other raised edge) of noncombustible material is to be provided. The sketch is of an acceptably enclosed component with ventilation openings showing that the enclosure is required only for those openings through which flaming parts may be emitted. If the component or assembly does not have its own noncombustible enclosure, the area to be protected is the entire area occupied by the component or assembly.

2) Projection of the outline of the area of A that needs a bottom enclosure vertically downward onto the horizontal plane of the lowest point on the outer edge D of the enclosure.

3) Inclined line that traces out an area D on the horizontal plane of the enclosure. Moving around the perimeter of the area B that needs a bottom enclosure, this line projects at a 5 degree angle from the line extending vertically at every point around the perimeter of A and is oriented to trace out the largest area; except that the angle may be less than 5 degrees if the enclosure bottom contacts a vertical enclosure or side panel, or if the horizontal extension of the enclosure B to D exceeds 152 mm (6 inch).

4) Minimum outline of the enclosure, except that the extension B to D need not exceed 152 mm (6 inch), flat or dished with or without a lip or other raised edge. The bottom may be flat or formed in any manner provided that every point of area D is at or below the lowest point on the outer edge of the enclosure.

UL COPYRIGHTED MATERIAL –
NOT AUTHORIZED FOR FURTHER REPRODUCTION OR
DISTRIBUTION WITHOUT PERMISSION FROM UL
Documents
Document Sharing Hub

Copyright UL
Provided by IHS under license with UL
No reproduction or networking permitted without license from IHS
Full document details: UL 1419 2011
Licensee=North Carolina State Univ/5618801100
Not for Resale, 07/06/2013 20:31:09 MDT

7.8 Top openings

7.8.1 Top openings shall not have a minor dimension of more than 4.8 mm (3/16 inch) unless the configuration is such that vertical entry to uninsulated live parts cannot occur.

Exception No. 1: An opening in the top of an overall enclosure and having a dimension larger than 4.8 mm (3/16 inch) is acceptable if it is protected by a knob, handle, louver, or similar part such that a falling object cannot pass directly through the opening in a vertical direction. Refer to Figure 7.1 for examples of acceptable designs.

Exception No. 2: If a falling object can pass through the opening in a vertical direction, it is acceptable if the object can only contact parts not involving a risk of fire or electric shock and is prevented by barriers or the like from moving into areas containing such parts.

7.9 Material requirements – Option B (Performance)

7.9.1 Polymeric materials used for an enclosure or internal parts, printed wiring boards, connectors, and the like shall be rated for flammability and ignition according to Table 7.3.

Table 7.3
Material requirements – Option B[a]

Application	Flammability classification[b,d]	Resistance to ignition from hot wire[c,d] PLC min
(A) Enclosures[e] or insulating materials[e], printed wiring boards and connectors[e] in contact with parts conductively connected to supply, unlimited power[f] or > 2500 V circuits (high voltage)	V-2 V-1 V-0 5V	–
(B) Enclosure materials used in all other applications[e]	HB	3
(C) Insulating materials, printed wiring boards and connectors used in applications other than those covered in (A) or (B) above	–	–

[a] These requirements do not apply to the internal insulating systems of components or where component requirements exist.

[b] The flammability classifications V-0, V-1, V-2, and HB are to be determined by the tests described in the Standard for Tests for Flammability of Plastic Materials for Parts in Devices and Appliances, UL 94. For enclosures, a material classified using 3.2 mm thick bar specimens may be accepted in lesser thicknesses in the end product. For the parts, a material classified using 1.6 mm thick bar specimens may be accepted in lesser thicknesses in the end product.

[c] Hot-Wire Resistance to Ignition performance is expressed as the number of seconds needed to ignite standard specimens that are wrapped with resistance wire that dissipates a specified level of electrical energy. Bar specimens are to be used for this test. For enclosures, a material classified using 3.2 mm thick bar specimens may be accepted in lesser thicknesses in the end product. Refer to the Standard for Polymeric Materials- Short-Term Property Evaluations, UL 746A, for details of the test.

[d] For an assembly, specimens for the test parameters according to Table 7.3 may consist of the assembly and may be tested as finished parts, or test specimens may be cut from finished parts. In the same case of small parts that might be consumed before the test is completed, large specimens of the same material may be tested provided that they represent the same or lesser thickness than the part in question. None of the larger specimens are to be entirely consumed. Specimens that consist of an assembly or a section thereof that are not flat stock pieces are to be positioned in what is considered to be the worst position in the application.

UL COPYRIGHTED MATERIAL –
NOT AUTHORIZED FOR FURTHER REPRODUCTION OR
DISTRIBUTION WITHOUT PERMISSION FROM UL

Table 7.3 Continued on Next Page

Documents
Document Sharing Hub

Copyright UL
Provided by IHS under license with UL
No reproduction or networking permitted without license from IHS
Full document details: UL 1419 2011

Licensee=North Carolina State Univ/5618801100
Not for Resale, 07/06/2013 20:31:09 MDT

Table 7.3 Continued

Application	Flammability classification[b,d]	Resistance to ignition from hot wire[c,d] PLC min
[e] The requirements that materials used in applications covered by (A) and (B) of Table 7.3, possess certain flammability and ignition ratings do not apply to small parts. For the purpose of these requirements, a small part is one which: 1) the maximum dimension does not exceed 60 mm, and 2) the volume does not exceed 8000 mm^3, and 3) is located where it could not act as a bridge between a source of arcing or ignition and other ignitable parts [f] An unlimited power circuit is one in which the maximum available power is not limited to 240 W or less in accordance with Risk of Fire, Section 30.		

8 Equipment Intended to be Installed in Restricted Access Areas

8.1 Equipment may be provided without enclosures if it is intended solely for installation in restricted access areas such as dedicated equipment rooms, equipment closets and the like that limit access to the equipment to trained service personnel only. Such equipment shall comply with 8.2 – 8.8.

8.2 The bottom of equipment intended to be installed in restricted access areas shall comply with the requirements for enclosure bottom openings in 7.7.1 – 7.7.3.

8.3 Material utilized in the construction of the equipment, including insulating materials, and the like, shall comply with Table 7.1.

8.4 Printed wiring boards shall have a flammability rating of V-0.

8.5 All internal wiring and interconnecting cables provided with the equipment shall be rated minimum VW-1.

8.6 The equipment shall be constructed to provide for the protection of service personnel in accordance with Protection of Service Personnel for Equipment Not Provided with Complete Enclosures, Section 35.

8.7 The equipment shall be marked ″To Be Installed Only in Restricted Access Areas (Dedicated Equipment Rooms, Equipment Closets, or the like) in Accordance with Articles 110-18, 110-26, and 110-27 of the National Electrical Code, ANSI/NFPA 70.″ The reference to the National Electrical Code Articles is not required in the marking if the information is included in the installation or instruction manual and the equipment marking includes the symbol as shown in Figure 8.1 or the words ″See Instruction Manual″, or the equivalent.

UL COPYRIGHTED MATERIAL –
NOT AUTHORIZED FOR FURTHER REPRODUCTION OR
DISTRIBUTION WITHOUT PERMISSION FROM UL
Documents
Document Sharing Hub
Copyright UL
Provided by IHS under license with UL
No reproduction or networking permitted without license from IHS
Full document details: UL 1419 2011
Licensee=North Carolina State Univ/5618801100
Not for Resale, 07/06/2013 20:31:09 MDT

Figure 8.1
Instruction manual marking symbol

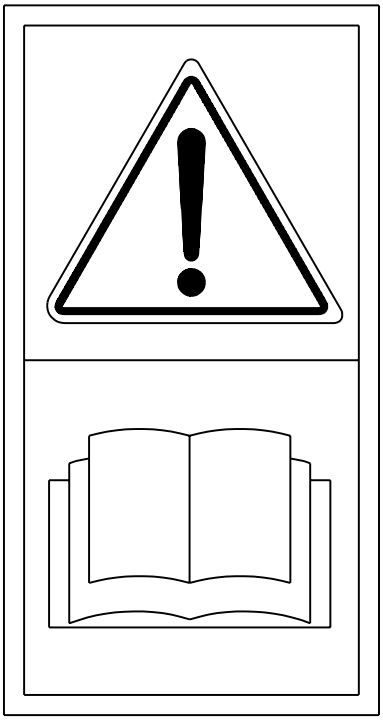

SM696A

8.8 Air filters for use in cooling systems shall comply with the requirements in the Standard for Air Filter Units, UL 900, or shall be constructed of materials rated V-1 or HF-1 or less flammable.

9 Equipment Intended to be Installed in Permanent Outdoor Locations

9.1 Enclosures for equipment intended for permanent outdoor installation shall comply with the requirements for Type 3 enclosures of the Standard for Enclosures for Electrical Equipment, Non-Environmental Considerations, UL 50. If the equipment is marked with a more severe outdoor enclosure type rating, then it shall comply with the requirements for that type rating.

UL COPYRIGHTED MATERIAL –
NOT AUTHORIZED FOR FURTHER REPRODUCTION OR
DISTRIBUTION WITHOUT PERMISSION FROM UL

Documents
Document Sharing Hub

Copyright UL
Provided by IHS under license with UL
No reproduction or networking permitted without license from IHS
Full document details: UL 1419 2011

Licensee=North Carolina State Univ/5618801100
Not for Resale, 07/06/2013 20:31:09 MDT

10 Mechanical assembly

10.1 A switch, lampholder, attachment plug, pressure wire connector, or similar component shall be mounted securely and shall be made resistant to turning.

Exception No. 1: The requirement that a switch be made resistant to turning may be waived if all of the following conditions are met:

a) The switch is a plunger or other type that does not tend to rotate when operated. (A toggle switch is considered to be subject to forces that tend to turn the switch during the intended operation of the switch.)

b) The means of mounting the switch makes it unlikely that operation of the switch loosens it.

c) The spacings are not reduced below the minimum acceptable values if the switch rotates.

d) Intended operation of the switch is by mechanical means rather than by direct contact by persons.

Exception No. 2: A lampholder of a type in which the lamp cannot be replaced, such as a neon pilot or indicator light where the lamp is sealed in by a non-removable jewel, need not be made resistant to turning if rotation cannot reduce spacings below the minimum accepted values or may place stress on lead connections.

10.2 The means for turn resistance mentioned in 10.1 is to consist of more than friction between surfaces. For example, a lock washer may be used as the means for making a small stem-mounted switch or other device that has a single-hole mounting means resistant to turning.

11 Supply Connections – Permanently Connected Equipment

11.1 General

11.1.1 Subsection 11.1 is only intended to serve as a reference for requirements that most commonly apply to permanently connected equipment and is not intended to provide a complete list of all of the applicable requirements. For complete requirements, see the National Electrical Code, ANSI/NFPA 70.

11.1.2 Permanently connected equipment shall be provided with means for permanent connection to the primary circuit power. Cord-connected equipment that is intended to be fastened in place or located in a dedicated space shall be provided with means for permanent connection to the primary circuit power unless connection by means of a supply cord is necessary to facilitate the interchange of equipment or removal is necessary for maintenance and repair, in which case, the shortest feasible length of cord shall be used.

11.1.3 Equipment intended for permanent connection to the branch circuit shall have provision for the connection of one of the wiring methods that in accordance with the National Electrical Code, ANSI/NFPA 70 would be required for the purpose.

UL COPYRIGHTED MATERIAL –
NOT AUTHORIZED FOR FURTHER REPRODUCTION OR
DISTRIBUTION WITHOUT PERMISSION FROM UL

Documents
Document Sharing Hub

Copyright UL
Provided by IHS under license with UL
No reproduction or networking permitted without license from IHS
Full document details: UL 1419 2011

Licensee=North Carolina State Univ/5618801100
Not for Resale, 07/06/2013 20:31:09 MDT

11.1.4 A sheet metal member to which a wiring system is to be connected in the field shall have a thickness not less than 0.8 mm (0.032 inch) if of uncoated sheet steel, not less than 0.9 mm (0.035 inch) if of galvanized sheet steel, not less than 1.1 mm (0.044 inch) if of sheet aluminum, and not less than 1.09 mm (0.043 inch) if of sheet copper or sheet brass.

11.1.5 A terminal box or compartment shall be provided in which branch circuit connections to permanently wired equipment are to be made and shall be such that these connections may be readily made and inspected without disturbing the wiring or the equipment after it is installed as intended.

11.1.6 The free length of a lead shall be no more than two wire sizes smaller than the copper supply conductor to which it will be connected. For example, if 2.1 mm^2 (14 AWG) supply conductors will be used, the leads provided shall be no smaller than 0.82 mm^2 (18 AWG).

11.1.7 A terminal compartment intended for connection of a supply raceway shall be attached to the equipment so that it is resistant to turning.

11.2 Separation of circuits

11.2.1 Field installation conductors of any circuit shall be separated by barriers:

a) From field and factory installed conductors connected to any other circuit, unless the conductors of both circuits are insulated for the maximum voltage in either circuit.

b) From an uninsulated part of any other circuit in the equipment and from any uninsulated live part, the short circuiting of which results in a risk of fire or electric shock.

11.2.2 Separation of some field installed conductors from others and from uninsulated live parts connected to different circuits may be accomplished by arranging the location of openings in the enclosure for the various conductors (with respect to the terminals or other uninsulated live parts) so that there is no likelihood that the conductors or parts of different circuits may be intermingled. If no more openings are provided in the enclosure than are necessary for proper wiring of the equipment and each opening is opposite a set of terminals, it is to be assumed in determining compliance with 11.2.1 that conductors entering the enclosure through any such opening will be connected only to the terminals opposite that opening. If more openings are provided in the enclosure than are necessary for the intended wiring of the equipment, it is assumed in determining compliance with 11.2.1 that conductors:

a) Will enter the enclosure through openings not opposite the terminals to which they are intended to be connected, and

b) May touch insulated conductors and uninsulated live parts of circuits other than their own.

UL COPYRIGHTED MATERIAL –
NOT AUTHORIZED FOR FURTHER REPRODUCTION OR
DISTRIBUTION WITHOUT PERMISSION FROM UL

Documents
Document Sharing Hub

Copyright UL
Provided by IHS under license with UL
No reproduction or networking permitted without license from IHS
Full document details: UL 1419 2011

Licensee=North Carolina State Univ/5618801100
Not for Resale, 07/06/2013 20:31:09 MDT

11.3 Wiring terminals

11.3.1 Permanently connected equipment shall be provided with wiring terminals or leads for the connection of conductors having an ampacity no less than 125 percent of the current input of the equipment. A wiring terminal shall be provided with a soldering lug or an acceptable pressure wire connector, firmly bolted or held by a screw.

Exception: A wire binding screw may be used at a wiring terminal intended to accommodate a 5.3 mm^2 (10 AWG) or smaller conductor if an upturned lug or the equivalent is provided to hold the wire in position. A fixed wiring terminal shall be prevented from turning.

11.3.2 A field wiring terminal shall be prevented from turning or shifting in position by means other than friction alone. For example, two screws or rivets, square shoulders or mortises, dowel pins, lugs, offsets, connecting straps or clips fitted into an adjacent part, or some equivalent method may be used.

11.3.3 A wire binding screw shall not be smaller than 4.8 mm diameter (No. 10).

Exception: A 4.2 mm diameter (No. 8) machine screw may be used at a terminal intended only for the connection of a 2.1 mm^2 (14 AWG) conductor, and a 3.5 mm diameter (No. 6) screw may be used for the connection of a 1.3 or 0.82 mm ^{2} (16 or 18 AWG) conductor.

11.3.4 It should be noted that 2.1 mm^2 (14 AWG) is the smallest conductor that is acceptable for branch circuit wiring and thus is the smallest conductor that is to be anticipated at a terminal for connection of a branch circuit conductor.

11.3.5 A terminal plate for a wire binding screw shall be of metal no less than 1.3 mm (0.050 inch) in thickness and shall have no less than two full threads in the metal.

11.3.6 A terminal plate formed from stock having the minimum required thickness as given in 11.3.5 may have the metal extruded at the tapped hole for the binding screw so as to provide two full threads.

11.3.7 An upturned lug or a cupped washer shall be capable of retaining a supply conductor as described in 11.3.1, but not smaller than 2.1 mm^2 (14 AWG), under the head of the screw or the washer.

11.3.8 The free length of a lead inside an outlet box or wiring compartment shall be 150 mm (6 inches) or more if the lead is intended for field connection to an external circuit.

11.3.9 Permanently connected equipment rated at 125 or 125/250 volts (3 wire) or less shall have one terminal or lead identified for the connection of the grounded circuit conductor of the power supply circuit.

11.3.10 If a lampholder is provided, the identified terminal or lead mentioned in 11.3.9 shall be connected to the screw shell of the lampholder. A fuse or single pole switch, circuit breaker, or automatic control shall not be connected to the identified grounded conductor.

Exception: A single pole automatic control without a marked off position may be connected to the grounded conductor.

UL COPYRIGHTED MATERIAL –
NOT AUTHORIZED FOR FURTHER REPRODUCTION OR
DISTRIBUTION WITHOUT PERMISSION FROM UL

Documents
Document Sharing Hub

Copyright UL
Provided by IHS under license with UL
No reproduction or networking permitted without license from IHS
Full document details: UL 1419 2011

Licensee=North Carolina State Univ/5618801100
Not for Resale, 07/06/2013 20:31:09 MDT

11.3.11 A field wiring terminal intended for the connection of a grounded neutral supply conductor shall be identified by means of a metallic coating that is substantially white in color and shall be easily distinguishable from the other terminals; or proper identification of the terminal for the connection of the grounded conductor shall be clearly shown in some other manner, such as on an attached wiring diagram. If wire leads are provided instead of terminals, the identified lead shall have a white or gray color and shall be easily distinguishable from the other leads.

12 Audio Output Connections

12.1 An amplifier or similar equipment having an audio output potential greater than 100 volts when tested as described in 59.2 shall be provided with one of the following to permit connection of the output circuit:

a) Means for connection of conduit complying with 11.1.2 – 11.1.6, and wire binding screws, 3.5 mm diameter (No. 6-32) or larger, quick connect terminals, or leads. If wire binding screws are provided, the terminals shall comply with the requirements in 11.1.4 and 11.1.5. If quick connect terminals are provided, the terminals shall comply with the requirements in 12.2.

b) A length of permanently attached Type SPT-2, SV, SVE, SVT, SJ, SJE, or SJT flexible cord, or the equivalent, and an acceptable equipment coupler complying with the requirements in 13.2. The cord shall be provided with strain relief and a bushing complying with the requirements in 13.3.1, 13.4.1 and 13.6.

c) An opening that will permit the field installation of a flexible cord and wire binding screws, quick connect terminals or leads as described in (a). Such an opening shall be provided with an insulating bushing as described in 13.6.

d) A receptacle for a plug-in connection.

Exception: The constructions described in (b), (c), and (d) are not acceptable if the equipment is intended for supply connection by means of conduit.

12.2 If the following conditions are met, quick-connect terminals may be used for field connection as described in 12.1(a):

a) The male tabs are firmly mounted in place.

b) Mating female connectors are provided with the equipment.

c) Strain relief is provided with the equipment so that stress on the conductors will not be transmitted to the terminals.

Exception: Strain relief is not necessary if a separate wiring compartment or barrier is provided such that a disconnected terminal will not contact a live part or an accessible dead metal part.

d) The installation instructions include information for assembly of a terminal to a conductor, and the utilization of strain relief as follows:

1) In the case of a terminal intended to be assembled to a wire or wires by a specific tool, the tool designation is specified.

2) Instructions for preparation of the conductors, such as twisting strands of the conductors together before assembly.

UL COPYRIGHTED MATERIAL –
NOT AUTHORIZED FOR FURTHER REPRODUCTION OR
DISTRIBUTION WITHOUT PERMISSION FROM UL
Documents
Document Sharing Hub
Copyright UL
Provided by IHS under license with UL
No reproduction or networking permitted without license from IHS
Full document details: UL 1419 2011
Licensee=North Carolina State Univ/5618801100
Not for Resale, 07/06/2013 20:31:09 MDT

3) The size and type of wire (solid or stranded).

4) If strain relief is required, identification of the strain relief means and instructions for its use.

e) The quick connect terminals are acceptable for use with the size and type (solid or stranded) of wire specified.

f) If a strain relief means is provided, it performs acceptably when installed in accordance with the installation instructions and when tested in accordance with 46.1.1 – 46.1.4.

13 Cord-Connected Equipment

13.1 Cords and plugs

13.1.1 Equipment which is intended for cord connection to the supply source shall be provided with a power supply cord. The supply cord shall be attached permanently to the equipment or shall be in the form of a detachable power supply cord with a means for connection to male contacts affixed to the equipment.

Exception: A detachable power supply cord need not be provided if the equipment is marked in accordance with the provisions of 62.15.2.

13.1.2 A flexible supply cord shall have an ampacity as given in the National Electrical Code, ANSI/NFPA 70, not less than the current rating of the equipment.

13.1.3 A flexible cord not protected from continuous abuse shall be Type SJT. An equivalent or heavier type cord may be used.

13.1.4 A flexible cord protected from continuous abuse shall be Type SVT or SPT-2. An equivalent or heavier type cord may be used.

13.1.5 A flexible cord is considered protected from continuous abuse if:

a) The cord is contained in a protected enclosure, i.e. rack-mounted equipment,

b) During normal operation the entire cord or cable is 92 cm (3 feet) or more above the floor and is not mounted on wheels or intended for transport other than to the installation site, or

c) Less than 2.5 m (8 ft 3 in) in length.

13.1.6 The length of a power supply cord is to be measured from the face of the attachment plug to the point where the cord emerges from the equipment. The length of a detachable power supply cord is to be measured from the face of the attachment plug to the face of the equipment coupler.

13.1.7 Only one supply cord shall be provided to connect equipment to the branch circuit.

Exception: More than one power supply cord may be provided if one of the following is true:

a) More than 1 voltage or kind of power is necessary (for example, 3-phase and 1-phase, regulated and unregulated, alternating current and direct current).

b) The additional power supply cord

UL COPYRIGHTED MATERIAL –
NOT AUTHORIZED FOR FURTHER REPRODUCTION OR
DISTRIBUTION WITHOUT PERMISSION FROM UL

Documents
Document Sharing Hub

Copyright UL
Provided by IHS under license with UL
No reproduction or networking permitted without license from IHS
Full document details: UL 1419 2011

Licensee=North Carolina State Univ/5618801100
Not for Resale, 07/06/2013 20:31:09 MDT

1) is provided as part of and

2) supplies power only for an optional component or group of components that may be installed at a later date in order to extend the function of the equipment.

c) Redundant power supply sources are necessary.

13.1.8 If more than one power supply cord is provided on the equipment, the construction shall be such that physical disconnection of any one power supply cord shall automatically cause de-energization of all circuits within the equipment supplied by other cords.

Exception No. 1: In the case of cords that remain connected, a terminal strip, any circuit breaker, and other parts of equipment on the line side of a disconnect device may remain energized if service personnel performing service functions not involving these parts are protected by an enclosure or other means from unintentional contact with these parts.

Exception No. 2: Automatic de-energization may be omitted if the equipment is provided with the marking specified in 62.15.1.

13.2 Equipment coupler

13.2.1 An equipment coupler employed as part of a detachable power supply cord set shall be so constructed that the equipment coupler cannot readily be used to defeat a conventional interlock device.

13.2.2 The conventional interlock device referred to in 13.2.1 has nominally 2.4 mm (3/32 inch) diameter pins, spaced 7.9 mm (5/16 inch) apart, measured between pin centers.

13.3 Cord strain relief

13.3.1 A non-detachable power supply cord or non-detachable interconnecting cable that involves fire or shock energy shall be attached to the equipment so that a mechanical strain on the cord leaving the overall enclosure cannot:

a) Be transmitted to terminals, splices, or internal wiring;

b) Separate an interlock connector from the part of the equipment to which it is attached; or

c) Damage an interlock such that it does not perform its intended function.

UL COPYRIGHTED MATERIAL –
NOT AUTHORIZED FOR FURTHER REPRODUCTION OR
DISTRIBUTION WITHOUT PERMISSION FROM UL

Documents
Document Sharing Hub

Copyright UL
Provided by IHS under license with UL
No reproduction or networking permitted without license from IHS
Full document details: UL 1419 2011

Licensee=North Carolina State Univ/5618801100
Not for Resale, 07/06/2013 20:31:09 MDT