UL 1447

STANDARD FOR SAFETY

Electric Lawn Mowers

UL COPYRIGHTED MATERIAL –
NOT AUTHORIZED FOR FURTHER REPRODUCTION OR
DISTRIBUTION WITHOUT PERMISSION FROM UL

Documents
Document Sharing Hub

Copyright UL
Provided by IHS Markit under license with UL
No reproduction or networking permitted without license from IHS
Full document details: UL 1447 2017

Licensee=/, User=,
Not for Resale,

UL COPYRIGHTED MATERIAL –
NOT AUTHORIZED FOR FURTHER REPRODUCTION OR
DISTRIBUTION WITHOUT PERMISSION FROM UL

Documents
Document Sharing Hub

Copyright UL
Provided by IHS Markit under license with UL
No reproduction or networking permitted without license from IHS
Full document details: UL 1447 2017

Licensee=/, User=,
Not for Resale,

UL Standard for Safety for Electric Lawn Mowers, UL 1447

Sixth Edition, Dated October 13, 2017

Summary of Topics

The revision pages dated November 8, 2017 are being issued to incorporate editorial revisions, including updated outside references and other editorial changes.

All rights reserved. No part of this publication may be reproduced, stored in a retrieval system, or transmitted in any form by any means, electronic, mechanical photocopying, recording, or otherwise without prior permission of UL.

UL provides this Standard ″as is″ without warranty of any kind, either expressed or implied, including but not limited to, the implied warranties of merchantability or fitness for any purpose.

In no event will UL be liable for any special, incidental, consequential, indirect or similar damages, including loss of profits, lost savings, loss of data, or any other damages arising out of the use of or the inability to use this Standard, even if UL or an authorized UL representative has been advised of the possibility of such damage. In no event shall UL's liability for any damage ever exceed the price paid for this Standard, regardless of the form of the claim.

Users of the electronic versions of UL's Standards for Safety agree to defend, indemnify, and hold UL harmless from and against any loss, expense, liability, damage, claim, or judgment (including reasonable attorney's fees) resulting from any error or deviation introduced while purchaser is storing an electronic Standard on the purchaser's computer system.

UL COPYRIGHTED MATERIAL –
NOT AUTHORIZED FOR FURTHER REPRODUCTION OR
DISTRIBUTION WITHOUT PERMISSION FROM UL

Documents
Document Sharing Hub

Copyright UL
Provided by IHS Markit under license with UL
No reproduction or networking permitted without license from IHS
Full document details: UL 1447 2017

Licensee=/, User=,
Not for Resale,

No Text on This Page

UL COPYRIGHTED MATERIAL –
NOT AUTHORIZED FOR FURTHER REPRODUCTION OR
DISTRIBUTION WITHOUT PERMISSION FROM UL

Documents
Document Sharing Hub

--`,,```,,,,``-`-`,,`,,`,`,,`---

Copyright UL
Provided by IHS Markit under license with UL
No reproduction or networking permitted without license from IHS
Full document details: UL 1447 2017

Licensee=/, User=,
Not for Resale,

OCTOBER 13, 2017
(Title Page Reprinted: November 8, 2017)

ANSI/UL 1447-2017

UL 1447

Standard for Electric Lawn Mowers

First Edition – May, 1977
Second Edition – September, 1988
Third Edition – June, 1994
Fourth Edition – May, 2006
Fifth Edition – August, 2011

Sixth Edition

October 13, 2017

This ANSI/UL Standard for Safety consists of the Sixth Edition including revisions through November 8, 2017.

The most recent designation of ANSI/UL 1447 as an American National Standard (ANSI) occurred on October 13, 2017. ANSI approval for a standard does not include the Cover Page, Transmittal Pages, and Title Page.

Comments or proposals for revisions on any part of the Standard may be submitted to UL at any time. Proposals should be submitted via a Proposal Request in UL's On-Line Collaborative Standards Development System (CSDS) at https://csds.ul.com.

UL's Standards for Safety are copyrighted by UL. Neither a printed nor electronic copy of a Standard should be altered in any way. All of UL's Standards and all copyrights, ownerships, and rights regarding those Standards shall remain the sole and exclusive property of UL.

COPYRIGHT © 2017 UNDERWRITERS LABORATORIES INC.

UL COPYRIGHTED MATERIAL –
NOT AUTHORIZED FOR FURTHER REPRODUCTION OR
DISTRIBUTION WITHOUT PERMISSION FROM UL

Documents
Document Sharing Hub

Copyright UL
Provided by IHS Markit under license with UL
No reproduction or networking permitted without license from IHS
Full document details: UL 1447 2017

Licensee=/, User=,
Not for Resale,

No Text on This Page

UL COPYRIGHTED MATERIAL –
NOT AUTHORIZED FOR FURTHER REPRODUCTION OR
DISTRIBUTION WITHOUT PERMISSION FROM UL

Documents
Document Sharing Hub

Copyright UL
Provided by IHS Markit under license with UL
No reproduction or networking permitted without license from IHS
Full document details: UL 1447 2017

Licensee=/, User=,
Not for Resale,

CONTENTS

PART 1 – ALL LAWN MOWERS

INTRODUCTION

1 Scope 8
2 Units of Measurement 8
3 References 8
4 Glossary 14

CONSTRUCTION

5 Components 20
5.1 General 20
5.2 Attachment plugs, receptacles, connectors, and terminals 21
5.3 Batteries 22
5.4 Boxes and raceways 22
5.5 Capacitors and filters 23
5.6 Controls 23
5.7 Cords, cables, and internal wiring 24
5.8 Cord reels 25
5.9 Film-coated wire (magnet wire) 25
5.10 Gaskets, seals and tubing 25
5.11 Ground-fault, arc-fault, and leakage current detectors / interrupters 26
5.12 Insulation systems 26
5.13 Light sources and associated components 26
5.14 Marking and labeling systems 27
5.15 Motors and motor overload protection 27
5.16 Overcurrent protection 29
5.17 Polymeric materials and enclosures 30
5.18 Printed-wiring boards 30
5.19 Semiconductors and small electrical and electronic components 31
5.20 Supplemental insulation, insulating bushings, and assembly aids 31
5.21 Switches 32
5.22 Transformers 32
5.23 Valves (electrically operated) and solenoids 32
6 Frame and Enclosure 33
6.1 General 33
6.2 Metallic enclosures 34
6.3 Polymeric enclosures 34
6.4 Handles 34
6.5 Protection against corrosion 36
7 Accessibility of Live Parts 36
8 Accessibility of Moving Parts 40
9 Mechanical Assembly 40
9.1 General 40
9.2 Lawn mowers shipped partially disassembled 42
10 Handles 43
11 Rotating Parts 43
12 Supply Connections 43

UL COPYRIGHTED MATERIAL –
NOT AUTHORIZED FOR FURTHER REPRODUCTION OR
DISTRIBUTION WITHOUT PERMISSION FROM UL
Documents
Document Sharing Hub
Copyright UL
Provided by IHS Markit under license with UL
No reproduction or networking permitted without license from IHS
Licensee=/, User=,
Not for Resale,
Full document details: UL 1447 2017

12.1 Power-supply cord 43
12.2 Cord set 44
12.3 Flexible cord 44
12.4 Attachment plug 44
12.5 Strain relief 45
12.6 Bushings 45
13 Live Parts 45
14 Internal Wiring 46
14.1 General 46
14.2 Splices and connections 47
15 Electrical Insulation 48
16 Motors 49
17 Switches and Controls 49
18 Controls – End Product Test Parameters 50
18.1 General 50
18.2 Auxiliary controls 50
18.3 Operating controls (regulating controls) 50
18.4 Protective controls (limiting controls) 52
18.5 Controls using a temperature sensing device 54
19 Lampholders 54
20 Capacitors 54
21 Printed-Wiring Boards 55
22 Spacings 55
23 Grounding 57

PERFORMANCE

24 General 58
25 Leakage Current Test 58
26 Starting Current Test 61
27 Continuity of Ground Connection Test 61
28 Input Test 61
29 Impact Test 62
30 Temperature Test 63
31 Dielectric Voltage-Withstand Test 67
32 Resistance to Moisture Tests 68
32.1 High humidity 68
32.2 Water spray 68
33 Operation Tests 72
33.1 Blade stopping time after long term cycling 72
33.2 Peripheral speed 72
33.3 Direction 72
33.4 Operation indicator 72
33.5 Sound level 73
34 Abnormal Operation Test 73
35 Handle Durability Test 74
36 Attachment Plug Test 74
37 Strain Relief Test 75
37.1 Pull 75
37.2 Torque 76
38 Push-Back Relief Test 76
39 Cord Flexing Test 76
40 Pressure Pad Test 78

UL COPYRIGHTED MATERIAL –
NOT AUTHORIZED FOR FURTHER REPRODUCTION OR
DISTRIBUTION WITHOUT PERMISSION FROM UL
Documents
Document Sharing Hub

Copyright UL
Provided by IHS Markit under license with UL
No reproduction or networking permitted without license from IHS
Full document details: UL 1447 2017
Licensee=/, User=,
Not for Resale,

41 Switch and Control Tests 78
41.1 General 78
41.2 Locked rotor test 78
41.3 Reversing switch test 79
42 Capacitor Test 80
43 Accelerated Aging Test 80
44 Permanency of Marking Tests 81
44.1 General 81
44.2 Oven aging test 81
44.3 Immersion test 82
44.4 Standard atmosphere test 82
45 Polymeric Materials Other Than HB 82
45.1 Mold stress evaluation 82
45.2 Resistance to impact test 83
45.3 Abnormal operation tests 83
45.4 Flame resistance test 84
46 Polymeric Materials Classified HB 84
46.1 General 84
46.2 Mold-stress evaluation 85
46.3 Resistance to impact test 85
46.4 Overload test 85
46.5 Flame test 86
46.6 Resistance to hot-wire ignition test 86
46.7 High-current arc ignition test 86

MANUFACTURING AND PRODUCTION TESTS

47 Production-Line Dielectric Voltage Withstand Test 87
47.1 Other than double-insulated mowers 87
47.2 Double-insulated mowers 88
48 Production-Line Continuity of Ground Test 88

RATING

49 General 89

MARKINGS

50 General 89
51 Identification and Rating 89
52 Fuses 90
53 Switches and Controls 90
54 Cautionary Markings 90

INSTRUCTIONS

55 Instruction Manual 93
55.1 General 93
55.2 Safety instructions 94

UL COPYRIGHTED MATERIAL –
NOT AUTHORIZED FOR FURTHER REPRODUCTION OR
DISTRIBUTION WITHOUT PERMISSION FROM UL

Documents
Document Sharing Hub

Copyright UL
Provided by IHS Markit under license with UL
No reproduction or networking permitted without license from IHS
Full document details: UL 1447 2017

Licensee=/, User=,
Not for Resale,

PART 2 – ROTARY LAWN MOWERS

GENERAL

56 Scope 98

CONSTRUCTION

57 Mechanical Assembly 99
58 Switches and Controls 99

PERFORMANCE

59 General 99
60 Input Test 100
61 Impact Test 100
62 Out-of-Balance Test 102
63 Blade Stopping Time 102
64 Torque Test 103
65 Structural Integrity Test 103
66 Foot Contact Test 103
67 Obstruction Test 107
68 Movable Guard Test 107

PART 3 – DOUBLE-INSULATED LAWN MOWERS

GENERAL

69 Scope 109

CONSTRUCTION

70 Insulation 109
71 Supply Connections 110
71.1 Power supply cord 110
71.2 Strain relief 111
71.3 Bushings 111
72 Grounding 111
73 Internal Wiring 111
74 Capacitors 113
75 Motors 113
75.1 Brush caps 113
75.2 Commutators and armature end-turns 113
75.3 Switches 114
75.4 Brush holders 115
76 Spacings 115

PERFORMANCE

77 Leakage Current 117
78 Insulation Resistance Test 117
79 Dielectric Voltage-Withstand Test 118

UL COPYRIGHTED MATERIAL –
NOT AUTHORIZED FOR FURTHER REPRODUCTION OR
DISTRIBUTION WITHOUT PERMISSION FROM UL

Documents
Document Sharing Hub

Copyright UL
Provided by IHS Markit under license with UL
No reproduction or networking permitted without license from IHS
Full document details: UL 1447 2017

Licensee=/, User=,
Not for Resale,

80 Resistance to Impact Test 118
81 Resistance to Heat Test 119
82 Overload Test 120
82.1 General 120
82.2 Test terminated – lawn mower does not operate 124
82.3 Test terminated – lawn mower still operates 125
83 Armature Investigation 125

MARKINGS

84 Details 126

SUPPLEMENT SA - BATTERY-POWERED LAWN MOWERS

SA1 Scope SA1
SA2 Construction and Performance SA1
SA3 Integral Battery Enclosure Test SA3

UL COPYRIGHTED MATERIAL –
NOT AUTHORIZED FOR FURTHER REPRODUCTION OR
DISTRIBUTION WITHOUT PERMISSION FROM UL

Documents
Document Sharing Hub

Copyright UL
Provided by IHS Markit under license with UL
No reproduction or networking permitted without license from IHS
Full document details: UL 1447 2017

Licensee=/, User=,
Not for Resale,

PART 1 – ALL LAWN MOWERS

INTRODUCTION

1 Scope

1.1 These requirements cover cord-connected electrically operated lawn mowers rated 250 volts or less to be employed in accordance with ANSI/NFPA 70.

1.2 These requirements also cover battery-powered lawn mowers as specified in Battery-Powered Lawn Mowers, Supplement SA in this Standard.

1.3 These requirements do not cover equipment for use in hazardous locations as defined in the , ANSI/NFPA 70.

1.4 These requirements do not cover sulky-type lawn mowers, garden tractors or their attachments, flail mowers, sickle-bar mowers, robotic lawn mowers, or lawn mowers intended for commercial use.

1.5 In addition to the requirements in this standard, a lawn mower shall comply with ANSI B71.1, and with the Safety Standard for Walk-Behind Power Lawn Mowers, 16 CFR 1205.

1.6 In the text, a requirement that applies only to a rotary or other type of lawn mower is identified by a specific reference in that requirement to the specific lawn mower involved. Absence of the specific reference, or use of the term lawn mower, indicates that the requirement applies to all of the lawn mowers covered in this standard.

2 Units of Measurement

2.1 Values stated without parentheses are the requirement. Values in parentheses are explanatory or approximate information.

3 References

3.1 Any undated reference to a code or standard appearing in the requirements in this standard shall be interpreted as referring to the latest edition of that code or standard.

ANSI Standards

ANSI/NFPA 70
National Electrical Code

ANSI B71.1
Safety Specification for Consumer Turf-Care Equipment – Walk-Behind Mowers and Ride-On Machines with Mowers

ANSI B71.1
Safety Specification for Consumer Turf-Care Equipment – Walk-Behind Mowers and Ride-On Machines with Mowers

ANSI Z21.21a/CSA 6.5a
Automatic Valves for Gas Appliances,

UL COPYRIGHTED MATERIAL –
NOT AUTHORIZED FOR FURTHER REPRODUCTION OR
DISTRIBUTION WITHOUT PERMISSION FROM UL

Documents
Document Sharing Hub

Copyright UL
Provided by IHS Markit under license with UL
No reproduction or networking permitted without license from IHS
Full document details: UL 1447 2017

Licensee=/, User=,
Not for Resale,

ASTM Standards

ASTM E230/E230M
Tolerances on Initial Values of EMF versus Temperature tables in the Standard Specification and Temperature-Electromotive Force (emf) Tables for Standardized Thermocouples

IEC Standards

IEC 61000-4-5
Electromagnetic Compatibility (Emc) – Part 4-5: Testing And Measurement Techniques – Surge Immunity Test

IEC 61672-1
Electroacoustics – Sound Level Meters – Part 1: Specifications

IEC 61672-2
Electroacoustics – Sound Level Meters – Part 2: Pattern Evaluation Tests

NFPA Standards

ANSI/NFPA 70
National Electrical Code

UL Standards

UL 20
General-Use Snap Switches

UL 44
Thermoset-Insulated Wires and Cables

UL 62
Flexible Cords and Cables

UL 66
Fixture Wire

UL 83
Thermoplastic-Insulated Wires and Cables

UL 94
Tests for Flammability of Plastic Materials for Parts in Devices and Appliances

UL 157
Gaskets and Seals

UL 224
Extruded Insulating Tubing

UL 244A
Solid-State Controls for Appliances

UL COPYRIGHTED MATERIAL –
NOT AUTHORIZED FOR FURTHER REPRODUCTION OR
DISTRIBUTION WITHOUT PERMISSION FROM UL

Documents
Document Sharing Hub

Copyright UL
Provided by IHS Markit under license with UL
No reproduction or networking permitted without license from IHS
Full document details: UL 1447 2017

Licensee=/, User=,
Not for Resale,

UL 248-1
Low-Voltage Fuses – Part 1: General Requirements

UL 248-5
Low-Voltage Fuses – Part 5: Class G Fuses

UL 310
Electrical Quick-Connect Terminals

UL 355
Cord Reels

UL 429
Electrically Operated Valves

UL 486A-486B
Wire Connectors

UL 486C
Splicing Wire Connectors

UL 486E
Equipment Wiring Terminals for Use with Aluminum and/or Copper Conductors

UL 496
Lampholders

UL 489
Molded-Case Circuit Breakers, Molded-Case Switches and Circuit-Breaker Enclosures

UL 498
Attachment Plugs and Receptacles

489A
Circuit Breakers For Use in Communications Equipment

UL 507
Electric Fans

UL 508
Industrial Control Equipment

UL 508C
Power Conversion Equipment

UL 510
Polyvinyl Chloride, Polyethylene, and Rubber Insulating Tape

UL 514A
Metallic Outlet Boxes

UL 514C
Nonmetallic Outlet Boxes, Flush-Device Boxes and Covers

UL COPYRIGHTED MATERIAL –
NOT AUTHORIZED FOR FURTHER REPRODUCTION OR
DISTRIBUTION WITHOUT PERMISSION FROM UL

Documents
Document Sharing Hub

Copyright UL
Provided by IHS Markit under license with UL
No reproduction or networking permitted without license from IHS
Full document details: UL 1447 2017

Licensee=/, User=,
Not for Resale,

UL 514D
Cover Plates for Flush-Mounted Wiring Devices

UL COPYRIGHTED MATERIAL –
NOT AUTHORIZED FOR FURTHER REPRODUCTION OR
DISTRIBUTION WITHOUT PERMISSION FROM UL

Documents
Document Sharing Hub

Copyright UL
Provided by IHS Markit under license with UL
No reproduction or networking permitted without license from IHS
Full document details: UL 1447 2017

Licensee=/, User=,
Not for Resale,

No Text on This Page

UL COPYRIGHTED MATERIAL –
NOT AUTHORIZED FOR FURTHER REPRODUCTION OR
DISTRIBUTION WITHOUT PERMISSION FROM UL

Documents
Document Sharing Hub

Copyright UL
Provided by IHS Markit under license with UL
No reproduction or networking permitted without license from IHS
Full document details: UL 1447 2017

Licensee=/, User=,
Not for Resale,

UL 635
Insulating Bushings

UL 746A
Polymeric Materials – Short Term Property Evaluations

UL 746B
Polymeric Materials – Long Term Property Evaluations

UL 746C
Polymeric Materials – Use in Electrical Equipment Evaluations

UL 746D
Polymeric Materials – Fabricated Parts

UL 758
Appliance Wiring Material

UL 773A
Nonindustrial Photoelectric Switches for Lighting Control

UL 796
Printed-Wiring Boards

UL 810
Capacitors

UL 817
Cord Sets and Power-Supply Cords

UL 873
Temperature-Indicating and – Regulating Equipment

UL 917
Clock-Operated Switches

UL 935
Fluorescent-Lamp Ballasts

UL 943
Ground-Fault Circuit-Interrupters

UL 943B
Appliance Leakage-Current Interrupters

UL 969
Marking and Labeling Systems

UL 991
Tests for Safety-Related Controls Employing Solid-State Devices

UL 1004-1
Rotating Electrical Machines – General Requirements

UL COPYRIGHTED MATERIAL –
NOT AUTHORIZED FOR FURTHER REPRODUCTION OR
DISTRIBUTION WITHOUT PERMISSION FROM UL
Documents
Document Sharing Hub

Copyright UL
Provided by IHS Markit under license with UL
No reproduction or networking permitted without license from IHS
Licensee=/, User=,
Not for Resale,
Full document details: UL 1447 2017

UL 1004-2
Impedance Protected Motors

UL 1004-3
Standard for Thermally Protected Motors

UL 1004-7
Electronically Protected Motors

UL 1029
High-Intensity Discharge Lamp Ballasts

UL 1053
Ground-Fault Sensing and Relaying Equipment

UL 1059
Terminal Blocks

UL 1077
Supplementary Protectors for Use in Electrical Equipment

1090
Electric Snow Movers

UL 1283
Electromagnetic Interference Filters

1411
Transformer and Motor Transformers for Use in Audio-, Radio-, and Television-Type Appliances

UL 1412
Fusing Resistors and Temperature-Limited Resistors for Radio- and Television-Type Appliances

UL 1434
Thermistor-Type Devices

UL 1441
Coated Electrical Sleeving

UL 1446
Systems of Insulating Materials – General

UL 1557
Electrically Isolated Semiconductor Devices

UL 1565
Positioning Devices

UL 1577
Optical Isolators

UL 1642
Lithium Batteries

UL COPYRIGHTED MATERIAL –
NOT AUTHORIZED FOR FURTHER REPRODUCTION OR
DISTRIBUTION WITHOUT PERMISSION FROM UL

Documents
Document Sharing Hub

Copyright UL
Provided by IHS Markit under license with UL
No reproduction or networking permitted without license from IHS
Full document details: UL 1447 2017

Licensee=/, User=,
Not for Resale,

UL 1699
Arc-Fault Circuit-Interrupters

UL 1977
Component Connectors for Data, Signal, Control and Power Applications

UL 1998
Software in Programmable Components

UL 2111
Protection for Motors

UL 2459
Insulated Multi-Pole Splicing Wire Connectors

UL 2595
General Requirements for Battery-Powered Appliances

4248-1
Fuseholders – Part 1: General Requirements

UL 4248-9
Fuseholders – Part 9: Class K

UL 5085-1
Low Voltage Transformers – Part 1: General Requirements

UL 5085-2
Low Voltage Transformers – Part 2: General Purpose Transformers

UL 5085-3
Low Voltage Transformers – Part 3: Class 2 and Class 3 Transformers

UL 60691
Thermal-Links – Requirements and Application Guide

UL 8750
Light Emitting Diode (LED) Equipment For Use In Lighting Products

UL 60730-1
Electrical Controls for Household and Similar Use; Part 1: General Requirements

UL 60730-2-2
Standard for Automatic Electrical Controls for Household and Similar Use; Part 2 Particular Requirements for Thermal Motor Protectors

UL 60730-2-6
Automatic Electrical Pressure Sensing Controls Including Mechanical Requirements

UL 60730-2-7
Electrical Controls for Household and Similar Use; Part 2: Particular Requirements for Timers and Time Switches

UL COPYRIGHTED MATERIAL –
NOT AUTHORIZED FOR FURTHER REPRODUCTION OR
DISTRIBUTION WITHOUT PERMISSION FROM UL
--`,,```,,,,``-`-`,,`,,`,`,,`---
Documents
Document Sharing Hub
Copyright UL
Provided by IHS Markit under license with UL
No reproduction or networking permitted without license from IHS
Licensee=/, User=,
Not for Resale,
Full document details: UL 1447 2017

UL 60730-2-8
Electrically Operated Water Valves, Including Mechanical Requirements

UL 60730-2-9
Automatic Electrical Controls for Household and Similar Use; Part 2: Particular Requirements for Temperature Sensing Controls

UL 60730-2-15
Automatic Electrical Controls for Household and Similar Use; Part 2: Particular Requirements for Automatic Electrical Air Flow, Water Flow and Water Level Sensing Controls

IEC 61000-4-5
Electromagnetic Compatibility (EMC) – Part 4-5: Testing and Measurement Techniques – Surge Immunity Test

4 Glossary

4.1 For the purpose of this Standard the following definitions apply.

4.2 ACCESSIBLE PART – A part located so that it can be contacted by a person, either directly or by means of a probe or tool, or so that it is not recessed the required distance behind an opening. See Section 7, Accessibility of Live Parts.

4.3 APPLIANCE – A single-outlet, female contact device for attachment to a flexible cord as part of a detachable power-supply cord to be connected to an appliance inlet (motor attachment plug).

4.4 APPLIANCE INLET (Motor Attachment Plug) – A male contact device mounted on an end product appliance to provide an integral blade configuration for the connection of an appliance coupler or cord connector.

4.5 APPLIANCE (FLATIRON) PLUG – An appliance coupler type of device having a cord guard and a slot configuration specified for use with heating or cooking appliances.

4.6 BASIC INSULATION – The insulation applied to live parts to provide basic protection against electric shock.

4.7 BLADE – Any rigid or semi-rigid device or means that is intended to cut grass during mowing operations and includes all blades of a multi-blade mower.

4.8 BLADE-TIP CIRCLE – The path described by the outermost point of the blade as it moves about its axis.

4.9 CATCHER ASSEMBLY – A part or combination of parts on a lawn mower that provides a means of collecting grass clippings and debris.

UL COPYRIGHTED MATERIAL –
NOT AUTHORIZED FOR FURTHER REPRODUCTION OR
DISTRIBUTION WITHOUT PERMISSION FROM UL

Documents
Document Sharing Hub

Copyright UL
Provided by IHS Markit under license with UL
No reproduction or networking permitted without license from IHS
Full document details: UL 1447 2017

Licensee=/, User=,
Not for Resale,

4.10 COMPONENT – A device or fabricated part of the appliance covered by the scope of a standard dedicated to the purpose. When incorporated in an appliance, equipment otherwise typically field installed (e.g. luminaire) is considered to be a component. Unless otherwise specified, materials that compose a device or fabricated part, such as thermoplastic or copper, are not considered components.

4.11 CONTROL, AUTOMATIC ACTION – A control in which at least one aspect is non-manual.

4.12 CONTROL, AUXILIARY – A device or assembly of devices that provides a functional utility, is not relied upon as an operational or protective control, and therefore is not relied upon for safety. For example, an efficiency control not relied upon to reduce the risk of electric shock, fire, or injury to persons during normal or abnormal operation of the end product is considered an auxiliary control.

4.13 CORD CONNECTOR – A female contact device wired on flexible cord for use as an extension from an outlet to make a detachable electrical connection to an attachment plug or, as an appliance coupler, to an equipment inlet.

4.14 CONTROL, MANUAL – A device that requires direct human interaction to activate or rest the control.

4.15 CONTROL, OPERATING – A device or assembly of devices, the operation of which starts or regulates the end product during normal operation. For example, a thermostat, the failure of which a thermal cutout/limiter or another layer of protection would mitigate the risk of electric shock, fire, or injury to persons, is considered an operating control. Operating controls are also referred to as ″regulating controls″.

16 CONTROL, PROTECTIVE – A device or assembly of devices, the operation of which is intended to reduce the risk of electric shock, fire or injury to persons during normal and reasonably anticipated abnormal operation of the appliance. For example, a thermal cutout/limiter, or any other control/circuit relied upon for normal and abnormal conditions, is considered a protective control. Protective controls are also referred to as ″limiting controls″ and ″safety controls″. During the evaluation of the protective control/circuit, the protective functions are verified under normal and single-fault conditions of the control.

4.17 CONTROL, TYPE 1 ACTION – The actuation of an automatic control for which the manufacturing deviation and the drift (tolerance before and after certain conditions) of its operating value, operating time, or operating sequence have not been declared and tested under this Standard.

4.18 CONTROL, TYPE 2 ACTION – The actuation of an automatic control for which the manufacturing deviation and the drift (tolerance before and after certain conditions) of its operating value, operating time, or operating sequence have been declared and tested under this Standard.

4.19 CUTTING HEIGHT – The vertical distance between the blade-tip circle and the supporting surface of a lawn mower.

4.20 CUTTING WIDTH – For a single-blade mower, the diameter of the blade-tip circle. For a multi-blade mower, the width of a composite of all blade-tip circles measured perpendicular to the forward direction of the mower.

UL COPYRIGHTED MATERIAL –
NOT AUTHORIZED FOR FURTHER REPRODUCTION OR
DISTRIBUTION WITHOUT PERMISSION FROM UL

Documents
Document Sharing Hub

Copyright UL
Provided by IHS Markit under license with UL
No reproduction or networking permitted without license from IHS
Full document details: UL 1447 2017

Licensee=/, User=,
Not for Resale,

4.21 DEAD-MAN CONTROL – An operator control designed so that it will automatically interrupt power when the actuating force supplied by the operator is removed.

4.22 DEFORM – Any visible alteration of shape or dimension of a body caused by stresses induced by external forces.

4.23 DOUBLE INSULATION – An insulation system comprised of both basic insulation and supplementary insulation, with the two insulation systems physically separated and arranged so that they are not simultaneously subjected to the same deteriorating influences – temperature, contaminants, and the like – to the same degree. See Figure 4.1.

Figure 4.1
Examples illustrating 4.23

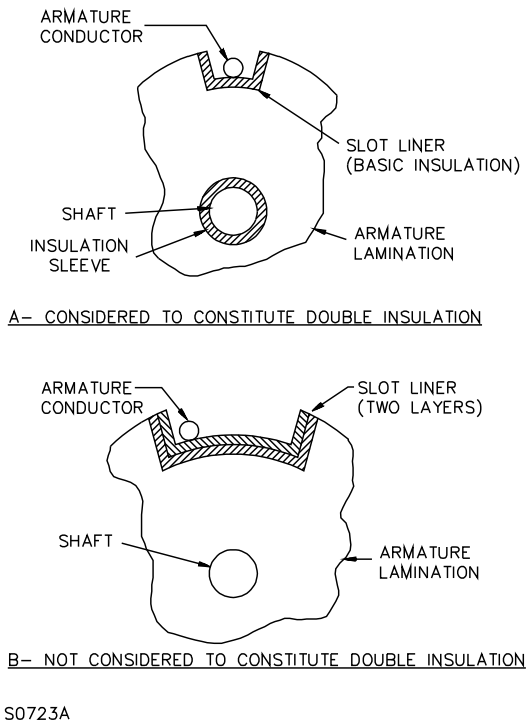

4.24 ENCLOSURE – That portion of the lawn mower that:

a) Renders inaccessible all or any part that may otherwise present a risk of electric shock or injury to persons; or

b) Reduces the propagation of flame that may be initiated by electrical disturbances occurring within.

UL COPYRIGHTED MATERIAL –
NOT AUTHORIZED FOR FURTHER REPRODUCTION OR
DISTRIBUTION WITHOUT PERMISSION FROM UL

Documents
Document Sharing Hub

Copyright UL
Provided by IHS Markit under license with UL
No reproduction or networking permitted without license from IHS
Full document details: UL 1447 2017

Licensee=/, User=,
Not for Resale,

4.25 GUARD – A part or an assembly provided for shielding an area that would otherwise introduce a risk of electric shock or injury to persons.

4.26 LEAKAGE CURRENT – All current or currents, including capacitively-coupled currents, that may be conveyed between exposed conductive surfaces of a lawn mower and ground or other exposed conductive surfaces of the lawn mower.

4.27 LIVE PART – A part electrically energized with respect to earth or energized with respect to some other part.

4.28 MAXIMUM OPERATING SPEED – The maximum revolutions per minute (rpm) obtainable by the motor under the conditions of the particular test where the term is used. For a cord-connected mower, it is the speed attained when the mower is energized from a 120V, (or 240V if applicable), 60Hz supply source with any blade speed controls set at maximum. For a battery-powered mower it is the speed attained after the battery has been fully charged in accordance with the mower manufacturer's instructions.

4.29 MINOR DIMENSION OF AN OPENING – The diameter of the largest cylindrical probe having a hemispherical tip that can be inserted through the opening with a force of 5 pounds (22.2 N).

4.30 MOTOR – A power-producing machine that converts electrical energy into mechanical energy.

4.31 NORMAL STARTING MEANS – The primary mechanism intended to be actuated by the operator to start a mower's motor.

4.32 OPERATING CONTROL ZONE – The space enclosed by a cylinder with a radius of 15 inches (380 mm) having a horizontal axis that is:

a) Perpendicular to the fore-aft centerline of the mower; and

b) Tangent to the rearmost part of the mower handle, extending 4 inches (102 mm) beyond the outermost portion of each side of the handle. See Figure 4.2.

UL COPYRIGHTED MATERIAL –
NOT AUTHORIZED FOR FURTHER REPRODUCTION OR
DISTRIBUTION WITHOUT PERMISSION FROM UL

Documents
Document Sharing Hub

Copyright UL
Provided by IHS Markit under license with UL
No reproduction or networking permitted without license from IHS
Full document details: UL 1447 2017

Licensee=/, User=,
Not for Resale,

Figure 4.2
Operating control zone

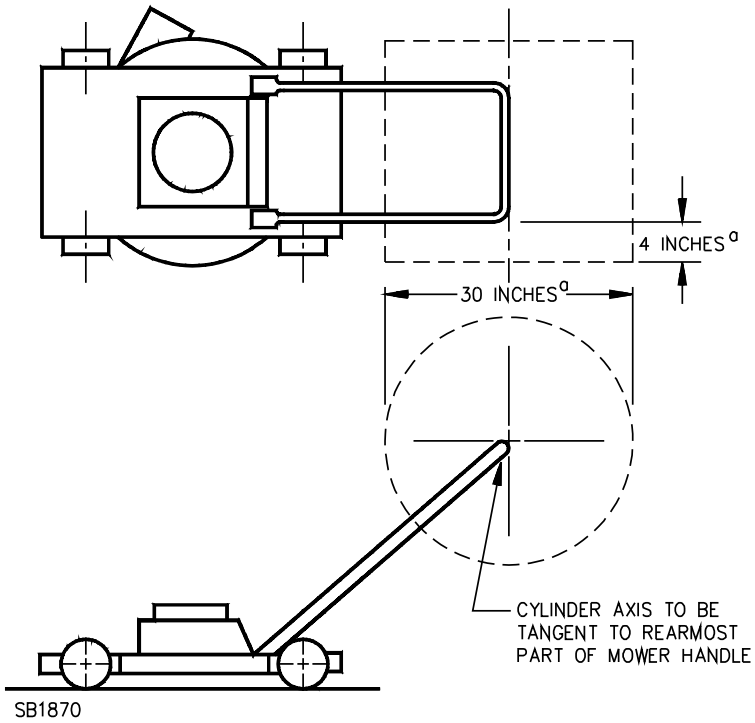

4.33 OPERATOR CONTROL – Any device necessary for operating a lawn mower including a drive-engaging control, a movable-guide control, a drive-speed changing control, and a deflector control.

4.34 OPERATOR ZONE – The space enclosed by a cylinder, from ground to 6 feet (1.63 m) above ground, with a radius of 20 inches (508 mm), having a vertical axis that is:

a) Located 13 inches (330 mm) behind the handle assembly when adjusted to the most unfavorable position; and

b) Centered on the fore-aft centerline of the cutting width. See Figure 4.3.

UL COPYRIGHTED MATERIAL –
NOT AUTHORIZED FOR FURTHER REPRODUCTION OR
DISTRIBUTION WITHOUT PERMISSION FROM UL

Documents
Document Sharing Hub

Copyright UL
Provided by IHS Markit under license with UL
No reproduction or networking permitted without license from IHS
Full document details: UL 1447 2017

Licensee=/, User=,
Not for Resale,

Figure 4.3
Operator zone

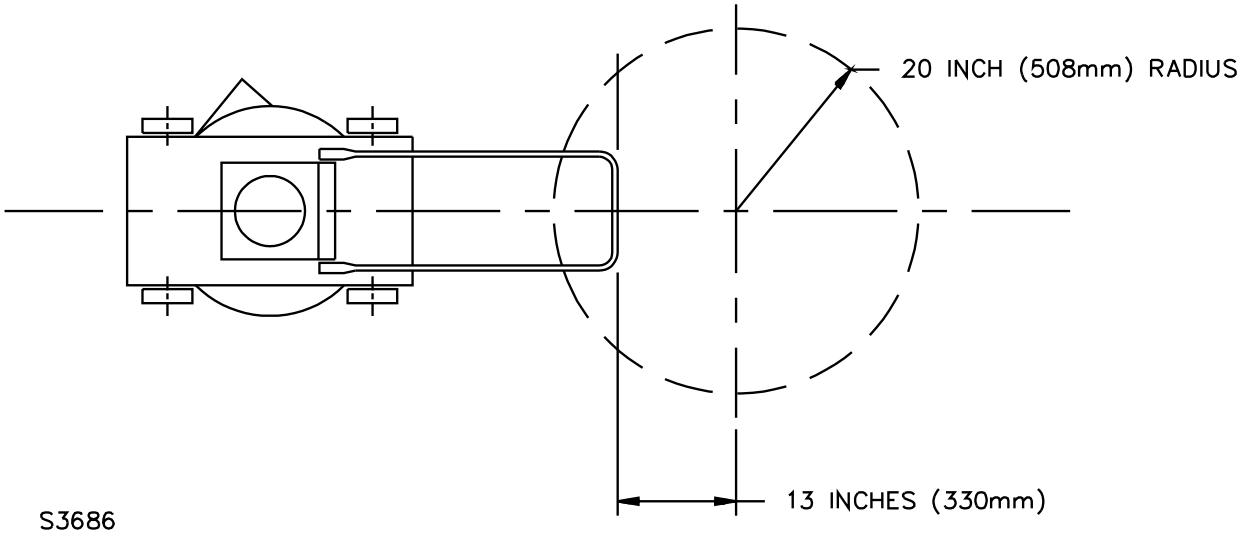

4.35 REEL-TYPE MOWER – A lawn mower that cuts grass by rotating one or more helically formed blades about a horizontal axis to provide a shearing action with a stationary cutter bar or bed knife.

4.36 REINFORCED INSULATION – An improved basic insulation with such mechanical and electrical qualities that it, in itself, provides the same degree of protection against electric shock as double insulation. It may consist of one or more layers of insulating material. It is acceptable in place of double insulation only in accordance with the Exception to 70.1.

4.37 ROBOTIC LAWN MOWER – An unattended lawn mower that operates automatically.

4.38 ROTARY MOWER – A lawn mower in which one or more cutting blades rotate in essentially a horizontal plane about at least one vertical axis.

4.39 SUPPLEMENTARY INSULATION – An independent insulation provided in addition to the basic insulation to protect against electric shock in case of mechanical rupture or electrical breakdown of the basic insulation. An enclosure of insulating material may form a part or the whole of the supplementary insulation.

4.40 SWING-OVER HANDLE – A handle that pivots from one end of a lawn mower to the other about a horizontal axis to allow reversing the direction of travel of the lawn mower without turning the lawn mower around.

UL COPYRIGHTED MATERIAL –
NOT AUTHORIZED FOR FURTHER REPRODUCTION OR
DISTRIBUTION WITHOUT PERMISSION FROM UL

Documents
Document Sharing Hub

Copyright UL
Provided by IHS Markit under license with UL
No reproduction or networking permitted without license from IHS
Full document details: UL 1447 2017

Licensee=/, User=,
Not for Resale,

4.41 WALK-BEHIND LAWN MOWER – A grass-cutting machine that:

a) Is either pushed or self-propelled;

b) Has a minimum cutting width of 12 inches (305 mm);

c) Employs a motor as the power source; and

d) Is controlled by an operator walking behind the mower.

CONSTRUCTION

5 Components

5.1 General

5.1.1 A component of a product covered by this Standard shall:

a) Comply with the requirements for that component as indicated in 5.2 – 5.23;

b) Be used in accordance with it's rating established for the intended conditions of use;

c) Be used within its established use limitations or conditions of acceptability;

d) Additionally comply with the applicable requirements of this end product Standard; and

e) Not contain mercury.

Exception No. 1: A component of a product covered by this Standard is not required to comply with a specific component requirement that:

a) Involves a feature or characteristic not required in the application of the component in the product;

b) Is superseded by a requirement in this Standard; or

c) Is separately investigated when forming part of another component, provided the component is used within its established ratings and limitations.

Exception No. 2: A component that complies with a UL component standard other than those specified in 5.2 – 5.23, is acceptable if:

a) The component also complies with the applicable component standard specified in 5.2 – 5.23; or

b) The component standard:

1) Is compatible with the ampacity and overcurrent protection requirements in ANSI/NFPA 70, where appropriate;

2) Considers long-term thermal properties of polymeric insulating materials in accordance with UL 746B; and

UL COPYRIGHTED MATERIAL –
NOT AUTHORIZED FOR FURTHER REPRODUCTION OR
DISTRIBUTION WITHOUT PERMISSION FROM UL

Documents
Document Sharing Hub

Copyright UL
Provided by IHS Markit under license with UL
No reproduction or networking permitted without license from IHS
Full document details: UL 1447 2017

Licensee=/, User=,
Not for Resale,

3) Any use limitations of the other component UL standard is identified and appropriately accommodated in the end use application. For example, a component used in a household application, but intended for industrial use and complying with the relevant component standard may assume user expertise not common in household applications.

5.1.2 A component that is also intended to perform other functions, such as over current protection, ground-fault circuit-interruption, surge suppression, any other similar functions, or any combination thereof, shall comply additionally with the requirements of the applicable UL standard that cover devices that provide those functions.

Exception: Where these other functions are not required for the application and not identified as part of markings, instructions, or packaging for the appliance, the additional component UL standard need not be applied.

5.1.3 A component not anticipated by the requirements of this Standard, not specifically covered by the component standards in 5.2 – 5.23, and that involves a risk of electric shock, fire, or personal injury, shall be additionally investigated in accordance with the applicable UL standard, and shall comply with Components – General, Section 5.1 (b) – (d).

5.1.4 With regard to a component being additionally investigated, reference to construction and performance requirements in another UL end product standard is appropriate where that standard anticipates normal and abnormal use conditions consistent with the application of UL 1447.

5.2 Attachment plugs, receptacles, connectors, and terminals

5.2.1 Attachment plugs, receptacles, appliance couplers, appliance inlets (motor attachment plugs), and appliance (flatiron) plugs, shall comply with UL 498. See 5.2.8.

Exception No. 1: Attachment plugs and appliance couplers integral to cord sets or power supply cords are investigated in accordance with UL 817, and need not comply with UL 498.

Exception No. 2: A fabricated pin terminal assembly need not comply with UL 498, if it complies with Section 13, Live Parts; Section 15, Electrical Insulation; and Section 22, Spacings, of this Standard.

5.2.2 Quick-connect terminals, both connectors and tabs, for use with one or two 22 – 10 AWG copper conductors, having nominal widths of 0.110, 0.125, 0.187, 0.205, and 0.250 inch (2.8, 3.2, 4.8, 5.2, and 6.3 mm), intended for internal wiring connections in appliances, or for the field termination of conductors to the appliance, shall comply with UL 310.

Exception: Other sizes of quick-connect terminals shall be investigated with respect to crimp pull out, insertion-withdrawal, temperature rise, and all tests shall be conducted in accordance with UL 310.

5.2.3 Single and multi-pole connectors for use in data, signal, control and power applications within and between electrical equipment, and that are intended for factory assembly to copper or copper alloy conductors, or for factory assembly to printed wiring boards, shall comply with UL 1977. See 5.2.8.

UL COPYRIGHTED MATERIAL –
NOT AUTHORIZED FOR FURTHER REPRODUCTION OR
DISTRIBUTION WITHOUT PERMISSION FROM UL

Documents
Document Sharing Hub

Copyright UL
Provided by IHS Markit under license with UL
No reproduction or networking permitted without license from IHS
Full document details: UL 1447 2017

Licensee=/, User=,
Not for Resale,

5.2.4 Wire connectors shall comply with UL 486A-486B.

5.2.5 Splicing wire connectors shall comply with UL 486C.

5.2.6 Multi-pole splicing wire connectors that are intended to facilitate the connection of hard-wired utilization equipment to the branch-circuit conductors of buildings shall comply with UL 2459. See 5.2.9.

5.2.7 Equipment wiring terminals for use with all alloys of copper, aluminum, or copper-clad aluminum conductors, shall comply with UL 486E.

5.2.8 Terminal blocks shall comply with UL 1059, and if applicable, be suitably rated for field wiring.

Exception: A fabricated part performing the function of a terminal block need not comply with UL 1059, if the part complies with the requirements of Flexible Cord, Section 12.3; Section 13, Live Parts; Section 15, Electrical Insulation; and Section 22, Spacings, of this end product Standard. This exception does not apply to protective conductor terminal blocks.

5.2.9 Female devices (such as receptacles, appliance couplers, and connectors) that are intended, or that may be used, to interrupt current in the end product, shall be suitably rated for current interruption of the specific type of load, when evaluated with its mating plug or connector. For example, an appliance coupler that can be used to interrupt the current of a motor load shall have a suitable horsepower rating when tested with its mating plug.

5.3 Batteries

5.3.1 Rechargeable lithium ion (Li-ion) cells shall comply with the requirements for secondary lithium cells specified in UL 1642.

5.4 Boxes and raceways

5.4.1 Electrical boxes and the associated bushings and fittings, and raceways, of the types specified in Wiring Methods and Materials of ANSI/NFPA 70 and that comply with the relevant UL standard (such as UL 514A, UL 514C, and UL 514D) and Components – General, Section 5.1, are considered to comply with the requirements of this Standard.

UL COPYRIGHTED MATERIAL –
NOT AUTHORIZED FOR FURTHER REPRODUCTION OR
DISTRIBUTION WITHOUT PERMISSION FROM UL

Documents
Document Sharing Hub

Copyright UL
Provided by IHS Markit under license with UL
No reproduction or networking permitted without license from IHS
Full document details: UL 1447 2017

Licensee=/, User=,
Not for Resale,

5.5 Capacitors and filters

5.5.1 The component requirements for a capacitor are not specified. A capacitor complying with UL 810 is considered to fulfill the requirements of 20.1.

5.5.2 Electromagnetic interference filters with integral enclosures that comply with UL 1283 are considered to fulfill the requirements of 20.1.

5.6 Controls

5.6.1 General

5.6.1.1 Auxiliary controls shall be evaluated using the applicable requirements of this end product Standard and the requirements in Section 18, Controls – End Product Test Parameters.

5.6.1.2 Operating (regulating) controls shall be evaluated using the applicable component standard requirements specified in 5.6.2 – 5.6.7, and if applicable, the requirements in Section 18, Controls – End Product Test Parameters, unless otherwise specified in this end product Standard.

5.6.1.3 Operating controls that rely upon software for the normal operation of the end product where deviation or drift of the control may result in a hazard, such as a speed control unexpectedly changing its output, shall comply with UL 991, UL 1998; and/or UL 60730-1

5.6.1.4 Protective (limiting) controls shall be evaluated using the applicable component standard requirements specified in 5.6.2 – 5.6.7, and if applicable, the parameters in Section 18, Controls – End Product Test Parameters, unless otherwise specified in this end product Standard.

5.6.1.5 Solid-state protective controls that do not rely upon software as a protective component shall comply with one UL 991, and/or UL 60730-1, except the Controls Using Software.

5.6.1.6 Protective controls that rely upon software as a protective component shall comply with UL 991, UL 1998 and/or UL 60730-1.

5.6.1.7 An electronic, non-protective control that is simple in design need only be subjected to the applicable requirements of this end product Standard. A control that does not include an integrated circuit or microprocessor, but does consist of a discrete switching device, capacitors, transistors, or resistors, is considered simple in design.

UL COPYRIGHTED MATERIAL –
NOT AUTHORIZED FOR FURTHER REPRODUCTION OR
DISTRIBUTION WITHOUT PERMISSION FROM UL

Documents
Document Sharing Hub

Copyright UL
Provided by IHS Markit under license with UL
No reproduction or networking permitted without license from IHS
Full document details: UL 1447 2017

Licensee=/, User=,
Not for Resale,

5.6.2 Electromechanical and electronic controls

5.6.2.1 A control, other than as specified in 5.6.2 – 5.6.7, shall comply with UL 244A, UL 873 or UL 60730-1.

5.6.3 Liquid level controls

5.6.3.1 A liquid level control shall comply with UL 244A, UL 873, UL 508, UL 60730-1, and UL 60730-2-15.

5.6.4 Motor and speed controls

5.6.4.1 A control used to start, stop, regulate or control the speed of a motor shall comply with UL 244A, UL 873, UL 508, UL 508C, or UL 60730-1.

5.6.5 Pressure controls

5.6.5.1 A pressure control shall comply with UL 873, UL 508 or UL 60730-2-6.

5.6.6 Temperature controls

5.6.6.1 A temperature control shall comply with UL 244A, UL 873, or UL 60730-1 and UL 60730-2-9

5.6.6.2 A temperature positive temperature coefficient (PTC) or a negative temperature coefficient (NTC) thermistor, that performs the same function as an operating or protective control shall comply with UL 1434.

5.6.6.3 A thermal cutoff shall comply with UL 60691.

5.6.7 Timer controls

5.6.7.1 A timer control shall comply with UL 244A or UL 60730-1, and UL 60730-2-7.

5.7 Cords, cables, and internal wiring

5.7.1 A cord set or power supply cord shall comply with UL 817.

5.7.2 Flexible cords and cables shall comply with UL 62. Flexible cord and cables are considered to fulfill this requirement when preassembled in a cord set or power supply cord complying with UL 817.

5.7.3 Internal wiring composed of insulated conductors shall comply with UL 758.

Exception No. 1: Insulated conductors need not comply with UL 758, if they comply with UL 44, UL 83, UL 66 or the applicable UL standard for other insulated conductor types specified in Wiring Methods and Materials of NFPA 70.

Exception No. 2: Insulated conductors for specialty applications (e.g. data processing or communications) and located in a low-voltage circuit not involving the risk of fire or personal injury need not comply with UL 758.

UL COPYRIGHTED MATERIAL –
NOT AUTHORIZED FOR FURTHER REPRODUCTION OR
DISTRIBUTION WITHOUT PERMISSION FROM UL

Documents
Document Sharing Hub

Copyright UL
Provided by IHS Markit under license with UL
No reproduction or networking permitted without license from IHS
Full document details: UL 1447 2017

Licensee=/, User=,
Not for Resale,

5.8 Cord reels

5.8.1 A cord reel shall comply with special use cord reel requirements of UL 355.

5.9 Film-coated wire (magnet wire)

5.9.1 The component requirements for film coated wire and Class 105 (A) insulation systems are not specified.

5.9.2 Film-coated wire in intimate combination with one or more insulators, and incorporated in an insulation system rated Class 120 (E) or higher, shall comply with the magnet wire requirements in UL 1446.

5.10 Gaskets, seals and tubing

5.10.1 Gaskets, o-rings, seals, and tubing the failure of which would increase the risk of fire, electric shock, injury to persons, or other hazards shall comply with UL 157.

UL COPYRIGHTED MATERIAL –
NOT AUTHORIZED FOR FURTHER REPRODUCTION OR
DISTRIBUTION WITHOUT PERMISSION FROM UL

Documents
Document Sharing Hub

Copyright UL
Provided by IHS Markit under license with UL
No reproduction or networking permitted without license from IHS
Full document details: UL 1447 2017

Licensee=/, User=,
Not for Resale,

5.11 Ground-fault, arc-fault, and leakage current detectors / interrupters

5.11.1 Ground-fault circuit-interrupters (GFCI) for protection against electrical shock shall comply with UL 943. The following statement, or equivalent, shall be included as a marking near the GFCI, or as an instruction in the manual: " Press the TEST button (then RESET button) every month to assure proper operation."

5.11.2 Appliance-leakage-current interrupters (ALCI) for protection against electrical shock shall comply with UL 943B. An ALCI is not considered an acceptable substitute for a GFCI when NFPA 70 requires a GFCI.

5.11.3 Equipment ground-fault protective devices shall comply with UL 1053, and the applicable requirements of UL 943.

5.11.4 Arc-fault circuit-interrupters (AFCI) shall comply with UL 1699.

5.11.5 Leakage-current detector-interrupters (LCDI) and any shielded cord between the LCDI and appliance shall comply with UL 1699.

5.12 Insulation systems

5.12.1 Materials used in an insulation system that operates above Class 105 (A) temperatures shall comply with UL 1446.

5.12.2 All insulation systems employing integral ground insulation shall comply with the requirements specified in UL 1446.

5.13 Light sources and associated components

5.13.1 Lampholders and indicating lamps shall comply with UL 496.

5.13.2 Lighting ballasts shall comply with UL 935 and UL 1029.

Exception No. 1: Ballasts forming part of a luminaire that complies with the applicable UL luminaire standard are considered to comply with this requirement.

Exception No. 2: Ballasts for other light sources shall comply with the appropriate UL standard.

5.13.3 Light emitting diode (LED) light sources shall comply with UL 8750.

Exception No. 1: LED light sources forming part of a luminaire that complies with an appropriate UL luminaire standard are considered to fulfill this requirement.

Exception No. 2: Individual LED light sources mounted on printed-wiring boards and intended for indicating purposes need not comply with UL 8750, but shall comply with the applicable requirements of this end product Standard.

UL COPYRIGHTED MATERIAL –
NOT AUTHORIZED FOR FURTHER REPRODUCTION OR
DISTRIBUTION WITHOUT PERMISSION FROM UL

Documents
Document Sharing Hub

Copyright UL
Provided by IHS Markit under license with UL
No reproduction or networking permitted without license from IHS
Full document details: UL 1447 2017

Licensee=/, User=,
Not for Resale,

5.14 Marking and labeling systems

5.14.1 A marking and labeling system shall comply with UL 969, under the specified environmental conditions.

Exception: A marking or labeling system that complies with Section 44, Permanency of Marking Tests, of this Standard is considered to fulfill the requirement.

5.15 Motors and motor overload protection

5.15.1 General

5.15.1.1 General-purpose type motors having a NEMA frame size shall comply with the requirements specified in General-Purpose Type Motors, Section 5.15.2. This includes fractional HP motors rated up to 1 HP (typically NEMA frame sizes 42, 48, or 56), and integral HP motors rated 1 HP and greater (typically NEMA frame sizes 140 – 449T).

5.15.1.2 Motors not enclosed, or partially enclosed, by the end product enclosure shall comply with the requirements specified in General-Purpose Type Motors, Section 5.15.2.

5.15.1.3 Component type motors completely enclosed within the end product enclosure shall comply with the requirements specified in General-Purpose Type Motors, Section 5.15.2 or Component Type Motors, Section 5.15.3.

5.15.1.4 Motors located in a low voltage circuit are evaluated for the risk of fire and personal injury in accordance with the applicable requirements of this end product Standard.

5.15.1.5 Low voltage component fans that comply with UL 507, are considered to comply with the requirements of Section 16, Motors, of this Standard.

5.15.2 General-purpose type motors

5.15.2.1 A general-purpose type motor shall comply with UL 1004-1.

5.15.3 Component type motors

5.15.3.1 Component type motors shall comply with either 5.15.3.2 or 5.15.3.3.

5.15.3.2 The motor shall comply with UL 1004-1except as noted in Table 5.1.

UL COPYRIGHTED MATERIAL –
NOT AUTHORIZED FOR FURTHER REPRODUCTION OR
DISTRIBUTION WITHOUT PERMISSION FROM UL

Documents
Document Sharing Hub

Copyright UL
Provided by IHS Markit under license with UL
No reproduction or networking permitted without license from IHS
Full document details: UL 1447 2017

Licensee=/, User=,
Not for Resale,

Table 5.1
Superseded requirements

UL 1004-1 Exempted Requirement	Superseded by UL 1447 Requirements
Section 6, Current and Horsepower Relation	31.3
Section 15, Cord-Connected Motors	Section 12, Supply Connections
Section 17, Factory Wiring Terminals and Leads	Section 14, Internal Wiring
Section 22, Electrical Insulation	Section 15, Electrical Insulation
Section 28, Non-Metallic Functional Parts	Section 6, Frame and Enclosure Section 15, Electrical Insulation Section 16, Motors
7.2, Solid-State Controls	Controls, Section 5.6
9.1.4, Non-metallic enclosure thermal aging	Polymeric Enclosures, Section 6.3
9.2 – 9.4, Motor enclosure	Section 16, Motors
Sections 10 and 11, Grounding	Section 23, Grounding
Section 12, Ventilation Openings: only applicable where the openings are on surfaces considered to be the appliance enclosure.	Section 16, Motors Section 7, Accessibility of Live Parts
Section 13, Accessibility of Uninsulated Live Parts, Film-Coated Wire, and Moving Parts	Section 16, Motors Section 7, Accessibility of Live Parts
Section 14, Protection Against Corrosion	Protection Against Corrosion, Section 6.5
Available fault current ratings for motor start and running capacitors, 26.6: not applicable for cord and plug connected appliances.	Section 20, Capacitors
Section 27, Switch, is not applicable to centrifugal starting switches	Section 17, Switches and Controls
With the exception of Sections 35 and 40 (Resilient Elastomer Mounting and Electrolytic Capacitor Tests, respectively), the performance tests in UL 1004-1 are not applicable	All applicable performance tests
Only the following marking requirements specified in 43.1 of UL 1004-1 are applicable: manufacturer's name or identification; rated voltage; rated frequency; number of phases if greater than 1; and multi-speed motors, other than a shaded-pole or a permanent-split-capacitor motor, shall be marked with the amperes and horsepower at each speed	Section 50, Markings – General

5.15.3.3 The motor shall comply with the applicable component requirements in Components – General, Section 5.1, the following construction requirements, and the applicable performance requirements (when tested in conjunction with the end-product), of this end-product Standard:

a) Protection Against Corrosion, 6.5;

b) Internal Wiring, Section 14;

c) Electrical Insulating, Section 15;

d) Motors, Section 16;

e) Capacitors, Section 20;

f) Spacings, Section 22; and

g) Grounding, Section 23.

UL COPYRIGHTED MATERIAL –
NOT AUTHORIZED FOR FURTHER REPRODUCTION OR
DISTRIBUTION WITHOUT PERMISSION FROM UL

Documents
Document Sharing Hub

Copyright UL
Provided by IHS Markit under license with UL
No reproduction or networking permitted without license from IHS
Full document details: UL 1447 2017

Licensee=/, User=,
Not for Resale,

5.15.4 Motor overload protection

5.15.4.1 Thermal protection devices integral with the motor shall comply with one of the following:

a) UL 2111;

b) UL 1004-3; or

c) UL 60730-1; and UL 60730-2-2; in conjunction with UL 1004-3, (to evaluate the motor-protector combination).

5.15.4.2 Impedance protection shall comply with UL 2111 or UL 1004-2

5.15.4.3 Electronic protection integral to the motor shall comply with UL 1004-7.

5.15.4.4 Except as indicated in 5.15.4.3, electronically protected motor circuits shall comply with one of the following (see Motor and Speed Controls, Section 5.6.4, for basic control requirements):

a) UL 991. When the protective electronic circuit is relying upon software as a protective component, it shall comply with the requirements in UL 1998. If software is relied upon to perform a safety function, it shall be considered software Class 1;

b) UL 60730-1; If software is relied upon to perform a safety function, it shall be considered software Class B; or

c) UL 508C.

Exception: Compliance with the above standards is not required for an electronically protected motor circuit if there is no risk of fire, electric shock, or casualty hazard during abnormal testing with the motor electronic circuit rendered ineffective; compliance with the applicable requirements of this end product Standard is then required.

5.16 Overcurrent protection

5.16.1 Fuses shall comply with UL 248-1; and the applicable UL 248 Part (e.g. UL 248-5). Defined use fuses that comply with UL 248-1 and another applicable UL standard for fuses are considered to fulfill this requirement.

5.16.2 Fuseholders shall comply with UL 4248-1, and the applicable Part (e.g. UL 4248-9).

5.16.3 Circuit breakers shall comply with UL 489.

Exception: Circuit breakers used in telecommunications circuitry that comply with UL 489A, need not comply with UL 489.

5.16.4 Circuit breakers having integral ground fault circuit interrupter capability for protection against electrical shock shall additionally comply with UL 943.

UL COPYRIGHTED MATERIAL –
NOT AUTHORIZED FOR FURTHER REPRODUCTION OR
DISTRIBUTION WITHOUT PERMISSION FROM UL

Documents
Document Sharing Hub

Copyright UL
Provided by IHS Markit under license with UL
No reproduction or networking permitted without license from IHS
Full document details: UL 1447 2017

Licensee=/, User=,
Not for Resale,

5.16.5 Supplementary protectors shall comply with UL 1077.

5.16.6 Fusing resistors shall comply with UL 1412.

5.17 Polymeric materials and enclosures

5.17.1 Polymeric enclosure materials or a polymeric device which provides mechanical support or electrical insulation or separation whose deterioration would reduce spacings between uninsulated live parts or could result in a risk of fire, electric shock, or risk of injury shall comply with UL 746A, UL 746B, and UL 746C unless superseded by the requirements in this Standard.

5.17.2 Polymeric materials molded or fabricated by a source other than the manufacturer, shall be identified according to UL 746D.

5.17.3 Metallized or painted polymeric parts or enclosures shall comply with the applicable requirements of UL 746C. This requirement is not applicable to exterior surfaces of polymeric enclosure materials or parts provided that the metallized coating or paint does not offer a continuous path for an internal flame to propagate externally.

5.18 Printed-wiring boards

5.18.1 Printed-wiring boards, including the coatings, shall comply with UL 796.

Exception: A printed-wiring board in a Class 2 non-safety circuit is not required to comply with the bonding requirements in UL 796, if the board is separated from parts of other circuits such that loosening of the bond between the foil conductor and the base material will not result in the foil conductors or components coming in contact with parts of other circuits of the control or of the end use product.

5.18.2 A printed-wiring board containing circuitry in a line-connected circuit or a safety circuit shall comply with the direct-support of live parts requirements.

5.18.3 Unless otherwise specified, a printed-wiring board shall have a minimum flame classification of V-2.

Exception: A printed-wiring board located in a secondary circuit that complies with the requirements for Class 2 or limited voltage/current circuits have a minimum flame Class of HB.

UL COPYRIGHTED MATERIAL –
NOT AUTHORIZED FOR FURTHER REPRODUCTION OR
DISTRIBUTION WITHOUT PERMISSION FROM UL

Documents
Document Sharing Hub

Copyright UL
Provided by IHS Markit under license with UL
No reproduction or networking permitted without license from IHS
Full document details: UL 1447 2017

Licensee=/, User=,
Not for Resale,

5.19 Semiconductors and small electrical and electronic components

5.19.1 A power switching semiconductor device that is relied upon to provide isolation to ground shall comply with UL 1557.

5.19.2 An optical isolator that is relied upon to provide isolation between primary and secondary circuits or between other circuits as required by this end product Standard shall comply with UL 1577.

5.19.3 Except as otherwise specified in this standard, component requirements are not specified for small electrical parts on printed-wiring boards, including diodes, transistors, resistors, inductors, integrated circuits, and capacitors not directly connected to the supply source.

5.19.4 Where an electronic component is determined to be a critical component during the Section 34, Abnormal Operation Test, in this Standard, the circuit shall comply with one or both of the following standards (see Protective Controls (Limitation Controls), Section 18.4, for the test parameters to be used):

a) UL 991, including its Follow-Up Program; and as applicable, the UL 1998 for controls that rely upon software as a protective component; and/or

b) UL 60730-1.

5.19.5 A critical component is a component that performs one or more safety-related functions whose failure results in a condition, such as the risk of fire, electric shock, or injury to persons, in the end product application.

5.19.6 A critical component may also be identified using a failure-mode and effect analysis (FMEA) in accordance with the Failure-Mode and Effect Analysis (FMEA), requirements of UL 991.

5.19.7 Portions of a circuit comprised of a microcontroller or other programmable device that performs a back-up, limiting, or other safety function intended to reduce the risk of fire, electric shock, or injury to persons shall comply with Controls Using Software requirements in UL 60730-1.

5.20 Supplemental insulation, insulating bushings, and assembly aids

5.20.1 The requirements for supplemental insulation (e.g. tape, sleeving or tubing) are not specified unless the insulation or device is required to comply with a performance requirement of this Standard. In such cases, the insulation or device shall comply with the following applicable standards:

a) Insulating tape shall comply with UL 510;

b) Sleeving shall comply with UL 1441; or

c) Tubing shall comply with UL 224.

5.20.2 Wire positioning devices required to comply with the requirements of this Standard shall comply with UL 1565.

UL COPYRIGHTED MATERIAL –
NOT AUTHORIZED FOR FURTHER REPRODUCTION OR
DISTRIBUTION WITHOUT PERMISSION FROM UL

Documents
Document Sharing Hub

Copyright UL
Provided by IHS Markit under license with UL
No reproduction or networking permitted without license from IHS
Full document details: UL 1447 2017

Licensee=/, User=,
Not for Resale,

5.20.3 Insulating bushings shall comply with UL 635 and be suitable for the application with respect to the hole size and shape, maximum use temperature and wire size or type. To determine if the hole size and shape is suitable for the bushing, the applicable test specified in this Standard (e.g. Strain Relief Test, Push-Back Relief Test, and Mold Stress Evaluation Test) should be conducted.

5.21 Switches

5.21.1 Switches shall comply with UL 1054, UL 61058-1, UL 20, and UL 773Aas applicable:

Exception: Switching devices that comply with the applicable UL standards for specialty applications (e.g. transfer switch equipment), industrial use (e.g. contactors, relays, auxiliary devices), or are integral to another component (e.g. switched lampholder) need not comply with this requirement.

5.21.2 A clock-operated switch, in which the switching contacts are actuated by a clock-work, by a gear-train, by electrically-wound spring motors, by electric clock-type motors, or by equivalent arrangements, shall comply with UL 917 or UL 60730-1 and UL 60730-2-7.

5.21.3 A timer or time switch, incorporating electronic timing circuits or switching circuits, with or without separable contacts, that functions as a protective control, shall comply with the requirements for a protective control. See 5.6.1.4.

5.22 Transformers

5.22.1 General-purpose transformers shall comply with UL 5085-1 and UL 5085-2.

Exception: A transformer that complies with UL 1411 and that is used in a circuit involving an audio or video component, complies with the intent of this requirement.

5.22.2 Class 2 and Class 3 transformers shall comply with UL 5085-1 and UL 5085-3.

Exception: Transformers located in a low voltage circuit, and that do not involve a risk of fire or personal injury, need not comply with this requirement.

5.23 Valves (electrically operated) and solenoids

5.23.1 Electrically operated valves shall comply with UL 429 or UL 60730-1 and UL 60730-2-8.

Exception: Automatic valves intended for use with natural gas, manufactured gas, LP-gas or LP-gas-air mixtures shall comply with ANSI Z21.21a/CSA 6.5a.

5.23.2 Solenoids shall comply with the applicable construction and performance requirements of this end product Standard.

UL COPYRIGHTED MATERIAL –
NOT AUTHORIZED FOR FURTHER REPRODUCTION OR
DISTRIBUTION WITHOUT PERMISSION FROM UL

Documents
Document Sharing Hub

Copyright UL
Provided by IHS Markit under license with UL
No reproduction or networking permitted without license from IHS
Full document details: UL 1447 2017

Licensee=/, User=,
Not for Resale,

6 Frame and Enclosure

6.1 General

6.1.1 The frame and enclosure of a lawn mower shall be formed and assembled so that it has the strength and rigidity necessary to resist the abuses to which is subjected, without introducing a risk of fire, electric shock, or injury to persons due to total or partial collapse with resulting reduction of spacings, loosening or displacement of parts, or other defects.

6.1.2 Among the factors taken into consideration when a frame or enclosure is investigated are its:

a) Mechanical strength;

b) Resistance to impact;

c) Moisture-absorptive properties;

d) Combustibility and resistance to ignition from electrical sources;

e) Resistance to corrosion;

f) Resistance to distortion at temperatures to which the enclosure may be subjected under conditions of normal or abnormal use; and

g) Dielectric properties, insulation resistance, and resistance to arc tracking.

6.1.3 Materials that are exposed to oil, acids, solvents, reagents, cleaning agents, or ozone as part of the use or application of the lawn mower shall not be adversely affected by these environments as determined by appropriate tests.

6.1.4 An edge, a projection, a corner, or the like of an enclosure, a frame, a guard, a handle, or the like shall be smooth and well-rounded, and not sufficiently sharp to constitute a risk of injury to persons in normal use and maintenance of a lawn mower.

6.1.5 If breakage or deformation of an enclosure, a frame, a guard, or the like, results in a risk of injury to persons, the material of the part shall have the properties required to meet the expected loading conditions without breakage or deformation.

6.1.6 With regard to the requirement in 6.1.5, a component of a lawn mower that is exposed to impact shall withstand the ball-impact test described in Section 29, Impact Test:

a) Without cracking that affects the functional strength of the part;

b) Without being affected to the extent that parts presenting a risk of electric shock or injury to persons would be exposed to unintentional contact; and

c) Without affecting the intended mechanical performance of the lawn mower.

UL COPYRIGHTED MATERIAL –
NOT AUTHORIZED FOR FURTHER REPRODUCTION OR
DISTRIBUTION WITHOUT PERMISSION FROM UL

Documents
Document Sharing Hub

Copyright UL
Provided by IHS Markit under license with UL
No reproduction or networking permitted without license from IHS
Full document details: UL 1447 2017

Licensee=/, User=,
Not for Resale,

6.1.7 A catcher assembly constructed of a woven fabric shall comply with the requirements of 65.1 and 65.2.

6.2 Metallic enclosures

6.2.1 Cast and sheet-metal portions of the enclosure shall not be thinner than specified in Table 6.1, unless the enclosure is found to be acceptable when investigated under the considerations specified in 6.1.2.

Table 6.1
Minimum acceptable thickness of metal enclosure

Metal	Minimum thickness, inch (mm)			
	At small, flat, unreinforced surfaces and at surfaces that are reinforced by curving, ribbing, or the like		At relatively large unreinforced flat surfaces	
Die-cast metal	3/64	(1.2)	5/64	(2.0)
Cast malleable iron	1/16	(1.6)	3/32	(2.4)
Other cast metal	3/32	(2.4)	1/8	(3.2)
Uncoated sheet steel	0.026	(0.66)	0.026	(0.66)
Galvanized sheet steel	0.029	(0.74)	0.029	(0.74)
Nonferrous sheet metal	0.036	(0.91)	0.036	(0.91)

6.3 Polymeric enclosures

6.3.1 A polymeric enclosure shall be of a material complying with the tests specified in Section 45, Polymeric Materials Other Than HB, or of a material classified HB complying with the tests specified in Section 46, Polymeric Materials Classified HB.

6.3.2 The material used as the enclosure shall be suitable for use at the maximum temperature to which it is exposed in normal use. Material exposed to temperatures in excess of 80°C (176°F) shall be investigated with respect to aging.

6.4 Handles

6.4.1 Other than as noted in 6.4.3, the handles or surfaces most likely to be grasped by the user during the normal operation of a lawn mower shall be made of or covered with an insulating material that complies with the requirements in 6.4.4, 6.4.5, Handle Durability Test, Section 35, Dielectric Voltage-Withstand Test, Section 79 and the second entry in Table 79.1.

6.4.2 With reference to 6.4.1, examples of surfaces that are likely to be grasped by the user during normal operation include a lever, handle, or button for a switch or other operator control. Surfaces of a guard for a switch or other operator control are also included if located where likely to be grasped. Operator-handled controls, such as wheel adjustments, collector bag releases, and the like, that are remote from the handles of the lawn mower are not included.

UL COPYRIGHTED MATERIAL –
NOT AUTHORIZED FOR FURTHER REPRODUCTION OR
DISTRIBUTION WITHOUT PERMISSION FROM UL

Documents
Document Sharing Hub

Copyright UL
Provided by IHS Markit under license with UL
No reproduction or networking permitted without license from IHS
Full document details: UL 1447 2017

Licensee=/, User=,
Not for Resale,

6.4.3 The outer surfaces of a handle or other area likely to be grasped during normal operation may be of electrically conductive material if:

a) Insulation complying with the requirements in 79.1, and the second entry in Table 79.1, is interposed between the surfaces likely to be grasped and:

1) The cutting member; and

2) Any metallic guard for the cutting member; and

b) Surfaces likely to be grasped:

1) Are double-insulated from live parts; or

2) Do not enclose electrical components and are separated from all dead metal parts that enclose electrical components by insulation complying with the requirements in 79.1, and the second entry in Table 79.1.

6.4.4 The insulating material specified in 6.4.1, shall be of a type and thickness that make it acceptable as the sole insulation between a live part and a dead metal part. If it overlies and is in intimate contact with dead metal, the insulating material shall be at least 5/64 inch (2.0 mm) thick.

Exception: The thickness of the insulating material may be less than 5/64 inch (2.0 mm) if the material is found to be acceptable when judged under the considerations specified in 6.1.2.

6.4.5 An assembly screw in an area likely to be grasped that secures a covering of insulating material to a metal enclosure and threads into a metal enclosure containing electrical components or into a metal enclosure that contacts another metal enclosure containing live parts:

a) Shall not be accessible to the probe illustrated in Figure 7.3, when inserted to a depth of 1 inch (25.4 mm); or

b) Shall not be recessed less than 1/8 inch (3.2 mm) behind the outer surface of the insulating material if the opening will not admit a 3/8-inch (9.5-mm) diameter rod.

UL COPYRIGHTED MATERIAL –
NOT AUTHORIZED FOR FURTHER REPRODUCTION OR
DISTRIBUTION WITHOUT PERMISSION FROM UL
--`,,```,,,,``-`-`,,`,,`,`,,`---
Documents
Document Sharing Hub
Copyright UL
Provided by IHS Markit under license with UL
No reproduction or networking permitted without license from IHS
Licensee=/, User=,
Not for Resale,
Full document details: UL 1447 2017

6.5 Protection against corrosion

6.5.1 Iron and steel parts shall be protected against corrosion by enameling, galvanizing, plating, or other equivalent means if the corrosion of such unprotected parts introduces a risk of fire, electric shock, or injury to persons.

Exception No. 1: In certain instances in which the oxidation of iron or steel due to the exposure of the metal to air and moisture is not likely to be appreciable – thickness of metal and temperature also being factors – surfaces of sheet steel and cast-iron parts within an enclosure may not be required to be protected against corrosion.

Exception No. 2: Bearings, laminations, or minor parts of iron or steel, such as washers, screws, and the like need not be protected against corrosion.

7 Accessibility of Live Parts

7.1 Electrical parts of a lawn mower shall be located or enclosed to reduce the likelihood of unintentional contact with uninsulated live parts. Insulated brush caps do not require additional enclosure.

7.2 An opening in the handle portion – the area likely to be handled during normal operation in guiding – of a lawn mower is acceptable if the probe of Figure 7.1, when inserted as far as possible into the opening:

a) Does not enter the opening for a distance of more than 1/8 inch (3.2 mm); and

b) Does not touch any uninsulated live part or film-coated wire.

UL COPYRIGHTED MATERIAL –
NOT AUTHORIZED FOR FURTHER REPRODUCTION OR
DISTRIBUTION WITHOUT PERMISSION FROM UL

Documents
Document Sharing Hub

Copyright UL
Provided by IHS Markit under license with UL
No reproduction or networking permitted without license from IHS
Licensee=/, User=,
Not for Resale,
Full document details: UL 1447 2017

Figure 7.1
Probe for hand-supported enclosure

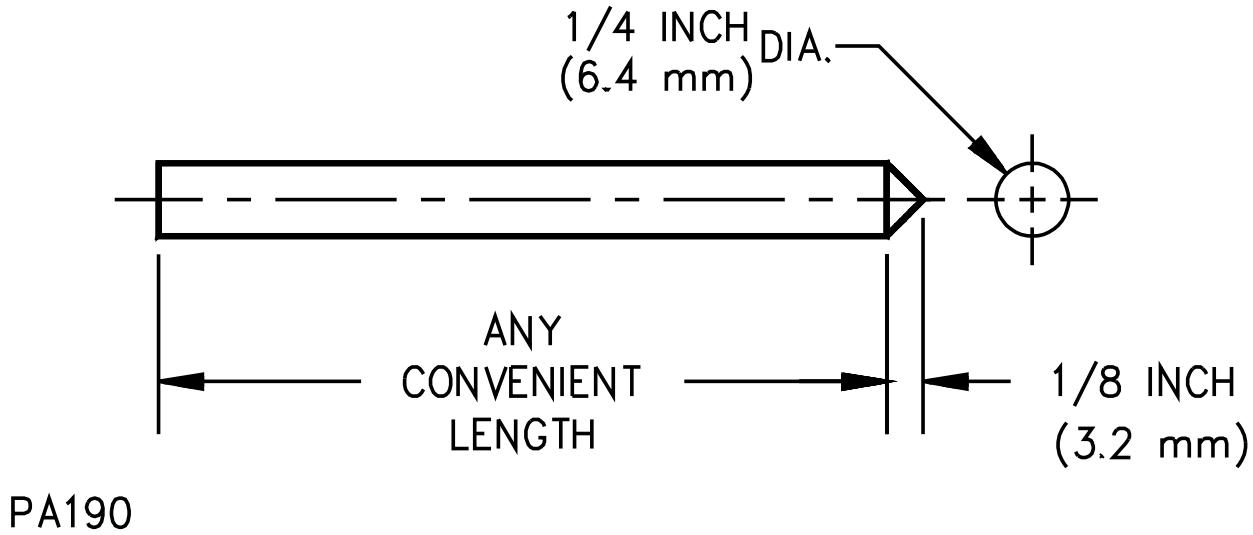

7.3 With reference to the requirement in 7.1, and except as indicated in 7.2, an opening is capable of being used when:

a) A probe as illustrated in Figure 7.2, cannot be made to touch any uninsulated live part or any film-coated wire when inserted through the opening in any possible direction using no appreciable force; and

b) A probe as illustrated in Figure 7.3, cannot be made to touch any uninsulated live part when inserted through the opening in any possible direction using no appreciable force.

7.4 The opening illustrated in Figure 7.4, is acceptable if, within the enclosure, there is no uninsulated live part or film-coated wire:

a) Less than X distance from the perimeter of the opening; and

b) Within the volume generated by projecting the perimeter distance X normal to its plane.

X equals five times the diameter of the largest diameter rod that can be inserted through the opening, but not less than 4 inches (101 mm). In evaluating an opening, any barrier located within the volume usually is ignored unless it intersects the boundaries of the volume in a continuous, closed line.

UL COPYRIGHTED MATERIAL –
NOT AUTHORIZED FOR FURTHER REPRODUCTION OR
DISTRIBUTION WITHOUT PERMISSION FROM UL
Documents
Document Sharing Hub

Copyright UL
Provided by IHS Markit under license with UL
No reproduction or networking permitted without license from IHS
Full document details: UL 1447 2017
Licensee=/, User=,
Not for Resale,

Figure 7.2
IEC articulate probe

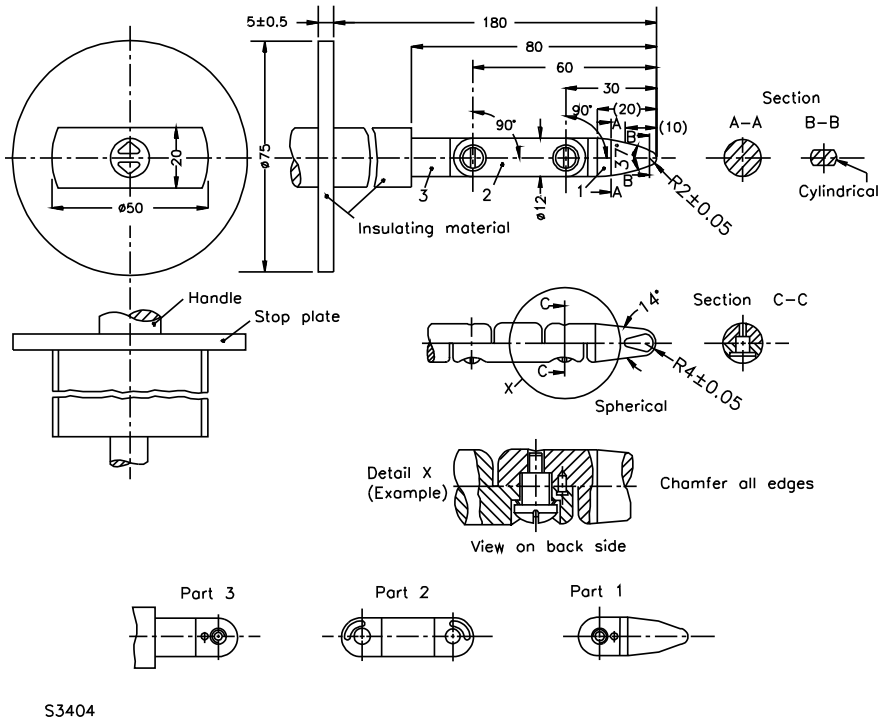

Figure 7.3
IEC test pin

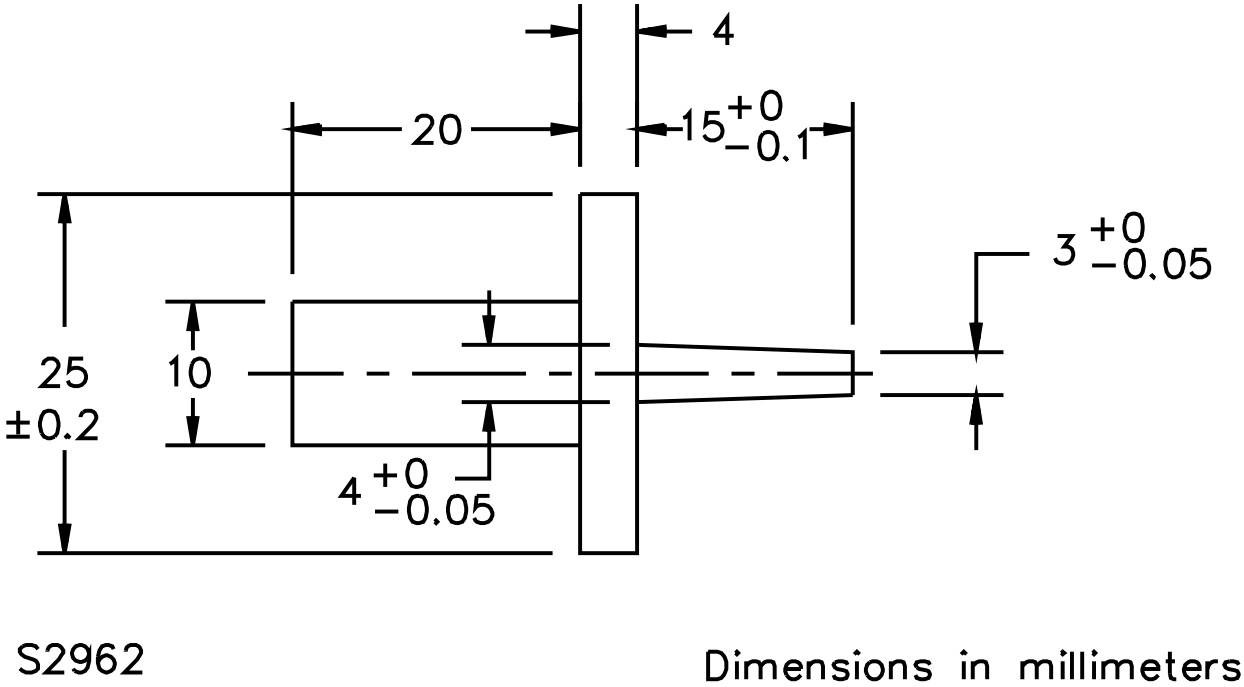

UL COPYRIGHTED MATERIAL –
NOT AUTHORIZED FOR FURTHER REPRODUCTION OR
DISTRIBUTION WITHOUT PERMISSION FROM UL

Documents
Document Sharing Hub

Copyright UL
Provided by IHS Markit under license with UL
No reproduction or networking permitted without license from IHS
Full document details: UL 1447 2017

Licensee=/, User=,
Not for Resale,

Figure 7.4
Opening in enclosure

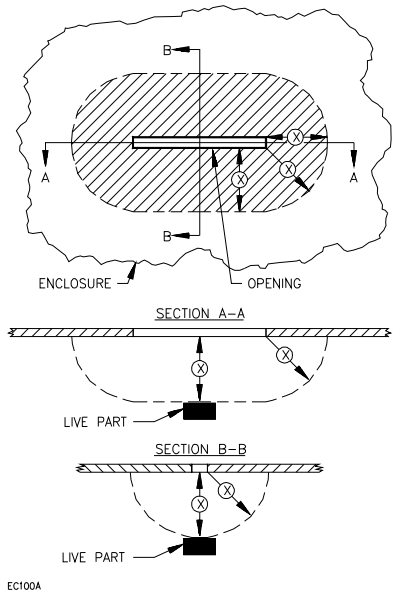

Proportions exaggerated for clarity

7.5 During the examination of a lawn mower in connection with the requirements in 7.1, a part of the outer enclosure that may be removed without the use of tools by the user of the lawn mower, to permit the attachment of accessories, to allow access to means for making operating adjustments, or for another reason, is to be disregarded – that is, it will not be assumed that the part in question affords protection against shock unless marked in accordance with 54.4.

7.6 A latch or fastener that is intended to be opened by use of a coin or the like is considered as being able to be opened without the use of a tool.

7.7 An opening in a guard or enclosure around a moving part capable of causing injury, such as a cutting tool, a fan, a pulley, a gear, a chain, or the like, shall have a minor dimension less than 1 inch (25.4 mm).

Exception: This requirement does not apply to an opening for the cutting edges or discharge chute of a lawn mower.

7.8 The unobstructed distance from the opening to the moving part specified in 7.7, shall not be less than 8D minus 1.5 inches (38 mm), in which D is the minor dimension of the opening in inches (or millimeters). However, a fan is considered to be acceptably guarded if the blade cannot be contacted with the probe illustrated in Figure 7.2.

UL COPYRIGHTED MATERIAL –
NOT AUTHORIZED FOR FURTHER REPRODUCTION OR
DISTRIBUTION WITHOUT PERMISSION FROM UL

Documents
Document Sharing Hub

Copyright UL
Provided by IHS Markit under license with UL
No reproduction or networking permitted without license from IHS
Full document details: UL 1447 2017

Licensee=/, User=,
Not for Resale,

8 Accessibility of Moving Parts

8.1 Moving parts shall be guarded or enclosed to reduce the risk of injury to persons.

8.2 Among the factors to be considered when judging the acceptability of an exposed moving part are:

a) Degree of exposure;

b) Sharpness of the moving part;

c) The likelihood of unintentional contact therewith;

d) The speed of the moving part; and

e) The likelihood that fingers, arms, or feet would be exposed to a risk of injury to persons by the moving part or that clothing would be caught by the part.

9 Mechanical Assembly

9.1 General

9.1.1 A lawn mower shall be assembled so that it is unlikely to create a risk of fire, electric shock, or injury to persons due to vibration during normal operation.

9.1.2 If various functional attachments are available for use with a lawn mower, each attachment shall be considered individually.

9.1.3 Some guards provided over moving parts are required to be self-restoring. Other features of guards that shall be considered include:

a) Removability without the use of tools;

b) Removability for servicing and likelihood of replacement;

c) Strength and rigidity;

d) Completeness; and

e) Introduction of an additional risk of injury such as a pinch point and the necessity for additional handling because of a need for servicing, such as cleaning, unjamming, and the like.

9.1.4 The enclosure or guard of a rotating member and a discharge guide or deflector shall be complete and shall have such strength as to contain and deflect:

a) Parts that because of breakage or other reasons become loose or separated from a rotating part; and

b) Foreign objects that are struck and propelled by a rotating member.

UL COPYRIGHTED MATERIAL –
NOT AUTHORIZED FOR FURTHER REPRODUCTION OR
DISTRIBUTION WITHOUT PERMISSION FROM UL

Documents
Document Sharing Hub

Copyright UL
Provided by IHS Markit under license with UL
No reproduction or networking permitted without license from IHS
Full document details: UL 1447 2017

Licensee=/, User=,
Not for Resale,

9.1.5 If a guard must be moved in order to install a catcher assembly, it shall be hinged or otherwise affixed to a lawn mower so that it automatically assumes its intended position when the catcher assembly is removed.

Exception: The hinged guard is not required to be used when a safety interlock is incorporated and when the interlock is suitable for 10,000 cycles at normal load.

9.1.6 A switch, a lampholder, an attachment-plug receptacle, a plug connector, or other component that is handled by the user shall be mounted securely and shall be prevented from turning by means other than friction between surfaces.

Exception No. 1: The requirement that a switch be prevented from turning may be waived if all four of the following conditions are met:

a) The switch is of a plunger, slide, or other type that does not tend to rotate when operated. A toggle switch is considered to be subject to forces that tend to turn the switch during normal operation of the switch.

b) The means of mounting the switch makes it unlikely that operation of the switch will loosen the switch.

c) Spacings are not reduced below the minimum acceptable values if the switch rotates.

d) Normal operation of the switch is by mechanical means rather than by direct contact by persons.

Exception No. 2: A lampholder of the type in which the lamp cannot be replaced, such as a neon pilot or indicator light in which the lamp is sealed in a nonremovable jewel, need not be prevented from turning if rotation cannot reduce spacings below the minimum acceptable values.

9.1.7 With reference to the requirements in 9.1.6, a lock washer, properly applied, is acceptable as the means for preventing a small stem-mounted switch or other device having a single-hole mounting means from turning.

9.1.8 An adhesive that is used to secure a part which if dislodged would result in a risk of electric shock, fire, or injury to persons shall comply with the requirements for adhesives in UL 746C.

9.1.9 The requirement in 9.1.8, also applies to an adhesive used to secure a conductive part that when loosened or dislodged:

a) Energizes an accessible dead metal part;

b) Makes a live part accessible;

c) Reduces spacings below the minimum acceptable values; or

d) Short-circuits live parts.

UL COPYRIGHTED MATERIAL –
NOT AUTHORIZED FOR FURTHER REPRODUCTION OR
DISTRIBUTION WITHOUT PERMISSION FROM UL

Documents
Document Sharing Hub

Copyright UL
Provided by IHS Markit under license with UL
No reproduction or networking permitted without license from IHS
Full document details: UL 1447 2017

Licensee=/, User=,
Not for Resale,

9.1.10 A lawn mower shall be so constructed that user-maintenance can be accomplished without the likelihood of:

a) Pinching leads;

b) Reducing spacings to values less than those indicated in Table 22.1;

c) Mislocating or damaging the means for accomplishing strain relief; and

d) Mislocating or damaging a guard or other similar device.

9.1.11 User-maintenance is considered to consist of inspection of or replacement of motor brushes or fuses and other service that is recommended in the instruction manual to be performed by the user. It does not include maintenance that the instruction manual recommends be done by authorized service personnel.

9.1.12 Compliance with the requirements in 9.1.10, is to be accomplished by routing of wires, provision of wire channels, provision of locating wells for components, use of barriers, use of restraints, securing of components, and other means.

9.1.13 Routing as mentioned in 9.1.10, is acceptable if the construction is such that after the wire has been put into the intended position prior to reassembling the lawn mower so that the reassembly procedure will not result in the wire contacting a moving part or being pinched. This does not mean that the wire must be of such length or so clamped that it cannot reach the pinch point or the moving part.

9.1.14 A lawn mower employing a soft rubber, neoprene, or polyvinyl chloride pressure pad to hold down or maintain permanent position of an electrical part, such as a motor, to provide for intended functioning of the lawn mower shall be tested in accordance with 40.2. If the pressure pad is exposed to grease, it shall also be tested in accordance with 40.3.

Exception: The test is not required if a risk of fire or electric shock does not result from deterioration of the pad as determined by the test in 40.1.

9.2 Lawn mowers shipped partially disassembled

9.2.1 A lawn mower shall be completely assembled before shipped from the factory.

Exception: A lawn mower may be shipped from the factory partially disassembled to facilitate packaging if:

a) All parts for assembly that are necessary for the operation of the lawn mower are provided in one carton;

b) Proper assembly can be readily accomplished without introducing a risk of fire, electric shock, or injury to persons;

c) Clear and detailed assembly instructions are provided;

d) Internal electrical connections that must be made in field are made by plug and receptacle connections only and do not require rearrangement of components or wiring; and

e) The lawn mower is marked in accordance with 54.8, if a required guard is shipped from the factory detached.

UL COPYRIGHTED MATERIAL –
NOT AUTHORIZED FOR FURTHER REPRODUCTION OR
DISTRIBUTION WITHOUT PERMISSION FROM UL

Documents
Document Sharing Hub

Copyright UL
Provided by IHS Markit under license with UL
No reproduction or networking permitted without license from IHS
Full document details: UL 1447 2017

Licensee=/, User=,
Not for Resale,