# UL 1447

## STANDARD FOR SAFETY

Electric Lawn Mowers

Documents
Document Sharing Hub

Full document details: UL 1447 2020

Documents
Document Sharing Hub

Full document details: UL 1447 2020

UL Standard for Safety for Electric Lawn Mowers, UL 1447

Sixth Edition, Dated October 13, 2017

***Summary of Topics***

***The revisions of ANSI/UL 1447 dated May 12, 2020 add references to UL 61800-5-1, Standard For Adjustable Speed Electric Power Drive Systems to replace all references to UL 508C, Standard for Power Conversion Equipment; 3.1, 5.6.4.1, and 5.15.4.4***

Text that has been changed in any manner or impacted by UL's electronic publishing system is marked with a vertical line in the margin.

The revised requirements are substantially in accordance with Proposal(s) on this subject dated February 14, 2020.

All rights reserved. No part of this publication may be reproduced, stored in a retrieval system, or transmitted in any form by any means, electronic, mechanical photocopying, recording, or otherwise without prior permission of UL.

UL provides this Standard "as is" without warranty of any kind, either expressed or implied, including but not limited to, the implied warranties of merchantability or fitness for any purpose.

In no event will UL be liable for any special, incidental, consequential, indirect or similar damages, including loss of profits, lost savings, loss of data, or any other damages arising out of the use of or the inability to use this Standard, even if UL or an authorized UL representative has been advised of the possibility of such damage. In no event shall UL's liability for any damage ever exceed the price paid for this Standard, regardless of the form of the claim.

Users of the electronic versions of UL's Standards for Safety agree to defend, indemnify, and hold UL harmless from and against any loss, expense, liability, damage, claim, or judgment (including reasonable attorney's fees) resulting from any error or deviation introduced while purchaser is storing an electronic Standard on the purchaser's computer system.

Documents
Document Sharing Hub

Full document details: UL 1447 2020

No Text on This Page

Documents
Document Sharing Hub

Full document details: UL 1447 2020

**OCTOBER 13, 2017**
(Title Page Reprinted: May 12, 2020)

**ANSI/UL 1447-2020**



# UL 1447

## Standard for Electric Lawn Mowers

First Edition – May, 1977
Second Edition – September, 1988
Third Edition – June, 1994
Fourth Edition – May, 2006
Fifth Edition – August, 2011

**Sixth Edition**

**October 13, 2017**

This ANSI/UL Standard for Safety consists of the Sixth Edition including revisions through May 12, 2020.

The most recent designation of ANSI/UL 1447 as an American National Standard (ANSI) occurred on May 1, 2020. ANSI approval for a standard does not include the Cover Page, Transmittal Pages, and Title Page.

Comments or proposals for revisions on any part of the Standard may be submitted to UL at any time. Proposals should be submitted via a Proposal Request in UL's On-Line Collaborative Standards Development System (CSDS) at https://csds.ul.com.

UL's Standards for Safety are copyrighted by UL. Neither a printed nor electronic copy of a Standard should be altered in any way. All of UL's Standards and all copyrights, ownerships, and rights regarding those Standards shall remain the sole and exclusive property of UL.

**COPYRIGHT © 2020 UNDERWRITERS LABORATORIES INC.**

Documents
Document Sharing Hub

Full document details: UL 1447 2020

No Text on This Page

Documents
Document Sharing Hub

Full document details: UL 1447 2020

## CONTENTS

### PART 1 – ALL LAWN MOWERS

### INTRODUCTION

1 Scope ....9
2 Units of Measurement ....9
3 References ....9
4 Glossary....15

### CONSTRUCTION

5 Components....20
5.1 General....20
5.2 Attachment plugs, receptacles, connectors, and terminals ....21
5.3 Batteries ....22
5.4 Boxes and raceways ....22
5.5 Capacitors and filters ....22
5.6 Controls ....22
5.7 Cords, cables, and internal wiring....23
5.8 Cord reels ....24
5.9 Film-coated wire (magnet wire) ....24
5.10 Gaskets, seals and tubing....24
5.11 Ground-fault, arc-fault, and leakage current detectors / interrupters....24
5.12 Insulation systems ....24
5.13 Light sources and associated components....24
5.14 Marking and labeling systems ....25
5.15 Motors and motor overload protection....25
5.16 Overcurrent protection....27
5.17 Polymeric materials and enclosures ....28
5.18 Printed-wiring boards ....28
5.19 Semiconductors and small electrical and electronic components ....28
5.20 Supplemental insulation, insulating bushings, and assembly aids ....29
5.21 Switches ....29
5.22 Transformers ....29
5.23 Valves (electrically operated) and solenoids ....30
6 Frame and Enclosure ....30
6.1 General....30
6.2 Metallic enclosures ....31
6.3 Polymeric enclosures ....31
6.4 Handles ....31
6.5 Protection against corrosion ....32
7 Accessibility of Live Parts ....33
8 Accessibility of Moving Parts....35
9 Mechanical Assembly....36
9.1 General....36
9.2 Lawn mowers shipped partially disassembled ....38
10 Handles....38
11 Rotating Parts ....38
12 Supply Connections ....39
12.1 Power-supply cord ....39
12.2 Cord set ....39
12.3 Flexible cord ....39

AVA Documents
Document Sharing Hub
Full document details: UL 1447 2020

12.4 Attachment plug ..... 39
12.5 Strain relief ..... 40
12.6 Bushings ..... 40
13 Live Parts ..... 40
14 Internal Wiring ..... 41
14.1 General ..... 41
14.2 Splices and connections ..... 42
15 Electrical Insulation ..... 42
16 Motors ..... 43
17 Switches and Controls ..... 44
18 Controls – End Product Test Parameters ..... 44
18.1 General ..... 44
18.2 Auxiliary controls ..... 45
18.3 Operating controls (regulating controls) ..... 45
18.4 Protective controls (limiting controls) ..... 46
18.5 Controls using a temperature sensing device ..... 48
19 Lampholders ..... 48
20 Capacitors ..... 48
21 Printed-Wiring Boards ..... 48
22 Spacings ..... 49
23 Grounding ..... 51

**PERFORMANCE**

24 General ..... 52
25 Leakage Current Test ..... 52
26 Starting Current Test ..... 53
27 Continuity of Ground Connection Test ..... 54
28 Input Test ..... 54
29 Impact Test ..... 54
30 Temperature Test ..... 55
31 Dielectric Voltage-Withstand Test ..... 59
32 Resistance to Moisture Tests ..... 60
32.1 High humidity ..... 60
32.2 Water spray ..... 60
33 Operation Tests ..... 64
33.1 Blade stopping time after long term cycling ..... 64
33.2 Peripheral speed ..... 64
33.3 Direction ..... 64
33.4 Operation indicator ..... 64
33.5 Sound level ..... 64
34 Abnormal Operation Test ..... 65
35 Handle Durability Test ..... 65
36 Attachment Plug Test ..... 66
37 Strain Relief Test ..... 66
37.1 Pull ..... 66
37.2 Torque ..... 67
38 Push-Back Relief Test ..... 67
39 Cord Flexing Test ..... 67
40 Pressure Pad Test ..... 68
41 Switch and Control Tests ..... 69
41.1 General ..... 69
41.2 Locked rotor test ..... 69
41.3 Reversing switch test ..... 70
42 Capacitor Test ..... 70
43 Accelerated Aging Test ..... 70

Documents
Document Sharing Hub
Full document details: UL 1447 2020

44 Permanency of Marking Tests ..... 71
44.1 General ..... 71
44.2 Oven aging test ..... 72
44.3 Immersion test ..... 72
44.4 Standard atmosphere test ..... 72
45 Polymeric Materials Other Than HB ..... 72
45.1 Mold stress evaluation ..... 72
45.2 Resistance to impact test ..... 73
45.3 Abnormal operation tests ..... 73
45.4 Flame resistance test ..... 74
46 Polymeric Materials Classified HB ..... 74
46.1 General ..... 74
46.2 Mold-stress evaluation ..... 75
46.3 Resistance to impact test ..... 75
46.4 Overload test ..... 75
46.5 Flame test ..... 75
46.6 Resistance to hot-wire ignition test ..... 75
46.7 High-current arc ignition test ..... 76

**MANUFACTURING AND PRODUCTION TESTS**

47 Production-Line Dielectric Voltage Withstand Test ..... 76
47.1 Other than double-insulated mowers ..... 76
47.2 Double-insulated mowers ..... 77
48 Production-Line Continuity of Ground Test ..... 77

**RATING**

49 General ..... 78

**MARKINGS**

50 General ..... 78
51 Identification and Rating ..... 78
52 Fuses ..... 79
53 Switches and Controls ..... 79
54 Cautionary Markings ..... 79

**INSTRUCTIONS**

55 Instruction Manual ..... 81
55.1 General ..... 81
55.2 Safety instructions ..... 82

**PART 2 – ROTARY LAWN MOWERS**

**GENERAL**

56 Scope ..... 86

**CONSTRUCTION**

57 Mechanical Assembly ..... 86
58 Switches and Controls ..... 86

AVA Documents
Document Sharing Hub
Full document details: UL 1447 2020

## PERFORMANCE

59 General ..... 87
60 Input Test ..... 87
61 Impact Test ..... 87
62 Out-of-Balance Test ..... 89
63 Blade Stopping Time ..... 89
64 Torque Test ..... 89
65 Structural Integrity Test ..... 89
66 Foot Contact Test ..... 90
67 Obstruction Test ..... 93
68 Movable Guard Test ..... 94

## PART 3 – DOUBLE-INSULATED LAWN MOWERS

## GENERAL

69 Scope ..... 95

## CONSTRUCTION

70 Insulation ..... 95
71 Supply Connections ..... 96
71.1 Power supply cord ..... 96
71.2 Strain relief ..... 96
71.3 Bushings ..... 96
72 Grounding ..... 97
73 Internal Wiring ..... 97
74 Capacitors ..... 98
75 Motors ..... 98
75.1 Brush caps ..... 98
75.2 Commutators and armature end-turns ..... 99
75.3 Switches ..... 99
75.4 Brush holders ..... 100
76 Spacings ..... 100

## PERFORMANCE

77 Leakage Current ..... 101
78 Insulation Resistance Test ..... 101
79 Dielectric Voltage-Withstand Test ..... 102
80 Resistance to Impact Test ..... 103
81 Resistance to Heat Test ..... 103
82 Overload Test ..... 104
82.1 General ..... 104
82.2 Test terminated – lawn mower does not operate ..... 107
82.3 Test terminated – lawn mower still operates ..... 108
83 Armature Investigation ..... 109

## MARKINGS

84 Details ..... 109

## SUPPLEMENT SA – BATTERY-POWERED LAWN MOWERS

Documents
Document Sharing Hub
Full document details: UL 1447 2020

SA1 Scope ..... 111
SA2 Construction and Performance ..... 111
SA3 Integral Battery Enclosure Test ..... 113

Documents
Document Sharing Hub

Full document details: UL 1447 2020

No Text on This Page

Documents
Document Sharing Hub

Full document details: UL 1447 2020

# PART 1 – ALL LAWN MOWERS

## INTRODUCTION

### 1 Scope

1.1 These requirements cover cord-connected electrically operated lawn mowers rated 250 volts or less to be employed in accordance with ANSI/NFPA 70.

1.2 These requirements also cover battery-powered lawn mowers as specified in Battery-Powered Lawn Mowers, Supplement SA in this Standard.

1.3 These requirements do not cover equipment for use in hazardous locations as defined in the , ANSI/NFPA 70.

1.4 These requirements do not cover sulky-type lawn mowers, garden tractors or their attachments, flail mowers, sickle-bar mowers, robotic lawn mowers, or lawn mowers intended for commercial use.

1.5 In addition to the requirements in this standard, a lawn mower shall comply with ANSI B71.1, and with the Safety Standard for Walk-Behind Power Lawn Mowers, 16 CFR 1205.

1.6 In the text, a requirement that applies only to a rotary or other type of lawn mower is identified by a specific reference in that requirement to the specific lawn mower involved. Absence of the specific reference, or use of the term lawn mower, indicates that the requirement applies to all of the lawn mowers covered in this standard.

### 2 Units of Measurement

2.1 Values stated without parentheses are the requirement. Values in parentheses are explanatory or approximate information.

### 3 References

3.1 Any undated reference to a code or standard appearing in the requirements in this standard shall be interpreted as referring to the latest edition of that code or standard.

**ANSI Standards**

ANSI/NFPA 70
*National Electrical Code*

ANSI B71.1
*Safety Specification for Consumer Turf-Care Equipment – Walk-Behind Mowers and Ride-On Machines with Mowers*

ANSI B71.1
*Safety Specification for Consumer Turf-Care Equipment – Walk-Behind Mowers and Ride-On Machines with Mowers*

ANSI Z21.21a/CSA 6.5a
*Automatic Valves for Gas Appliances*

Documents
Document Sharing Hub
Full document details: UL 1447 2020

**ASTM Standards**

ASTM E230/E230M
*Tolerances on Initial Values of EMF versus Temperature tables in the Standard Specification and Temperature-Electromotive Force (emf) Tables for Standardized Thermocouples*

**IEC Standards**

IEC 61000-4-5
*Electromagnetic Compatibility (Emc) – Part 4-5: Testing And Measurement Techniques – Surge Immunity Test*

IEC 61672-1
*Electroacoustics – Sound Level Meters – Part 1: Specifications*

IEC 61672-2
*Electroacoustics – Sound Level Meters – Part 2: Pattern Evaluation Tests*

**NFPA Standards**

ANSI/NFPA 70
National Electrical Code

**UL Standards**

UL 20
*General-Use Snap Switches*

UL 44
*Thermoset-Insulated Wires and Cables*

UL 62
*Flexible Cords and Cables*

UL 66
*Fixture Wire*

UL 83
*Thermoplastic-Insulated Wires and Cables*

UL 94
*Tests for Flammability of Plastic Materials for Parts in Devices and Appliances*

UL 157
*Gaskets and Seals*

UL 224
*Extruded Insulating Tubing*

UL 244A
*Solid-State Controls for Appliances*

UL 248-1

Documents
Document Sharing Hub
Full document details: UL 1447 2020

*Low-Voltage Fuses – Part 1: General Requirements*

UL 248-5
*Low-Voltage Fuses – Part 5: Class G Fuses*

UL 310
*Electrical Quick-Connect Terminals*

UL 355
*Cord Reels*

UL 429
*Electrically Operated Valves*

UL 486A-486B
*Wire Connectors*

UL 486C
*Splicing Wire Connectors*

UL 486E
*Equipment Wiring Terminals for Use with Aluminum and/or Copper Conductors*

UL 496
*Lampholders*

UL 489
*Molded-Case Circuit Breakers, Molded-Case Switches and Circuit-Breaker Enclosures*

UL 498
*Attachment Plugs and Receptacles*

489A
*Circuit Breakers For Use in Communications Equipment*

UL 507
*Electric Fans*

UL 508
*Industrial Control Equipment*

UL 510
*Polyvinyl Chloride, Polyethylene, and Rubber Insulating Tape*

UL 514A
*Metallic Outlet Boxes*

UL 514C
*Nonmetallic Outlet Boxes, Flush-Device Boxes and Covers*

UL 514D
*Cover Plates for Flush-Mounted Wiring Devices*

Documents
Document Sharing Hub
Full document details: UL 1447 2020

UL 635
*Insulating Bushings*

UL 746A
*Polymeric Materials – Short Term Property Evaluations*

UL 746B
*Polymeric Materials – Long Term Property Evaluations*

UL 746C
*Polymeric Materials – Use in Electrical Equipment Evaluations*

UL 746D
*Polymeric Materials – Fabricated Parts*

UL 758
*Appliance Wiring Material*

UL 773A
*Nonindustrial Photoelectric Switches for Lighting Control*

UL 796
*Printed-Wiring Boards*

UL 810
*Capacitors*

UL 817
*Cord Sets and Power-Supply Cords*

UL 873
*Temperature-Indicating and – Regulating Equipment*

UL 917
*Clock-Operated Switches*

UL 935
*Fluorescent-Lamp Ballasts*

UL 943
*Ground-Fault Circuit-Interrupters*

UL 943B
*Appliance Leakage-Current Interrupters*

UL 969
*Marking and Labeling Systems*

UL 991
*Tests for Safety-Related Controls Employing Solid-State Devices*

UL 1004-1
*Rotating Electrical Machines – General Requirements*

Documents
Document Sharing Hub
Full document details: UL 1447 2020

UL 1004-2
*Impedance Protected Motors*

UL 1004-3
*Standard for Thermally Protected Motors*

UL 1004-7
*Electronically Protected Motors*

UL 1029
*High-Intensity Discharge Lamp Ballasts*

UL 1053
*Ground-Fault Sensing and Relaying Equipment*

UL 1059
*Terminal Blocks*

UL 1077
*Supplementary Protectors for Use in Electrical Equipment*

1090
*Electric Snow Movers*

UL 1283
*Electromagnetic Interference Filters*

1411
*Transformer and Motor Transformers for Use in Audio-, Radio-, and Television-Type Appliances*

UL 1412
*Fusing Resistors and Temperature-Limited Resistors for Radio- and Television-Type Appliances*

UL 1434
*Thermistor-Type Devices*

UL 1441
*Coated Electrical Sleeving*

UL 1446
*Systems of Insulating Materials – General*

UL 1557
*Electrically Isolated Semiconductor Devices*

UL 1565
*Positioning Devices*

UL 1577
*Optical Isolators*

UL 1642
*Lithium Batteries*

Documents
Document Sharing Hub

Full document details: UL 1447 2020

UL 1699
*Arc-Fault Circuit-Interrupters*

UL 1977
*Component Connectors for Data, Signal, Control and Power Applications*

UL 1998
*Software in Programmable Components*

UL 2111
*Protection for Motors*

UL 2459
*Insulated Multi-Pole Splicing Wire Connectors*

UL 2595
*General Requirements for Battery-Powered Appliances*

4248-1
*Fuseholders – Part 1: General Requirements*

4248-9
*Fuseholders – Part 9: Class K*

UL 5085-1
*Low Voltage Transformers – Part 1: General Requirements*

UL 5085-2
*Low Voltage Transformers – Part 2: General Purpose Transformers*

UL 5085-3
*Low Voltage Transformers – Part 3: Class 2 and Class 3 Transformers*

UL 60691
*Thermal-Links – Requirements and Application Guide*

UL 8750
*Light Emitting Diode (LED) Equipment For Use In Lighting Products*

UL 60730-1
*Electrical Controls for Household and Similar Use; Part 1: General Requirements*

UL 60730-2-2
*Standard for Automatic Electrical Controls for Household and Similar Use; Part 2 Particular Requirements for Thermal Motor Protectors*

UL 60730-2-6
*Automatic Electrical Pressure Sensing Controls Including Mechanical Requirements*

UL 60730-2-7
*Electrical Controls for Household and Similar Use; Part 2: Particular Requirements for Timers and Time Switches*

Documents
Document Sharing Hub
Full document details: UL 1447 2020

UL 60730-2-8
*Electrically Operated Water Valves, Including Mechanical Requirements*

UL 60730-2-9
*Automatic Electrical Controls for Household and Similar Use; Part 2: Particular Requirements for Temperature Sensing Controls*

UL 60730-2-15
*Automatic Electrical Controls for Household and Similar Use; Part 2: Particular Requirements for Automatic Electrical Air Flow, Water Flow and Water Level Sensing Controls*

UL 61800-5-1
Adjustable Speed Electrical Power Drive Systems – Part 5-1: Safety Requirements – Electrical, Thermal, and Energy

IEC 61000-4-5
*Electromagnetic Compatibility (EMC) – Part 4-5: Testing and Measurement Techniques – Surge Immunity Test*

## 4 Glossary

4.1 For the purpose of this Standard the following definitions apply.

4.2 ACCESSIBLE PART – A part located so that it can be contacted by a person, either directly or by means of a probe or tool, or so that it is not recessed the required distance behind an opening. See Section 7, Accessibility of Live Parts.

4.3 APPLIANCE – A single-outlet, female contact device for attachment to a flexible cord as part of a detachable power-supply cord to be connected to an appliance inlet (motor attachment plug).

4.4 APPLIANCE INLET (Motor Attachment Plug) – A male contact device mounted on an end product appliance to provide an integral blade configuration for the connection of an appliance coupler or cord connector.

4.5 APPLIANCE (FLATIRON) PLUG – An appliance coupler type of device having a cord guard and a slot configuration specified for use with heating or cooking appliances.

4.6 BASIC INSULATION – The insulation applied to live parts to provide basic protection against electric shock.

4.7 BLADE – Any rigid or semi-rigid device or means that is intended to cut grass during mowing operations and includes all blades of a multi-blade mower.

4.8 BLADE-TIP CIRCLE – The path described by the outermost point of the blade as it moves about its axis.

4.9 CATCHER ASSEMBLY – A part or combination of parts on a lawn mower that provides a means of collecting grass clippings and debris.

4.10 COMPONENT – A device or fabricated part of the appliance covered by the scope of a standard dedicated to the purpose. When incorporated in an appliance, equipment otherwise typically field installed (e.g. luminaire) is considered to be a component. Unless otherwise specified, materials that compose a device or fabricated part, such as thermoplastic or copper, are not considered components.

Documents
Document Sharing Hub
Full document details: UL 1447 2020

4.11 CONTROL, AUTOMATIC ACTION – A control in which at least one aspect is non-manual.

4.12 CONTROL, AUXILIARY – A device or assembly of devices that provides a functional utility, is not relied upon as an operational or protective control, and therefore is not relied upon for safety. For example, an efficiency control not relied upon to reduce the risk of electric shock, fire, or injury to persons during normal or abnormal operation of the end product is considered an auxiliary control.

4.13 CORD CONNECTOR – A female contact device wired on flexible cord for use as an extension from an outlet to make a detachable electrical connection to an attachment plug or, as an appliance coupler, to an equipment inlet.

4.14 CONTROL, MANUAL – A device that requires direct human interaction to activate or rest the control.

4.15 CONTROL, OPERATING – A device or assembly of devices, the operation of which starts or regulates the end product during normal operation. For example, a thermostat, the failure of which a thermal cutout/limiter or another layer of protection would mitigate the risk of electric shock, fire, or injury to persons, is considered an operating control. Operating controls are also referred to as "regulating controls".

4.16 CONTROL, PROTECTIVE – A device or assembly of devices, the operation of which is intended to reduce the risk of electric shock, fire or injury to persons during normal and reasonably anticipated abnormal operation of the appliance. For example, a thermal cutout/limiter, or any other control/circuit relied upon for normal and abnormal conditions, is considered a protective control. Protective controls are also referred to as "limiting controls" and "safety controls". During the evaluation of the protective control/circuit, the protective functions are verified under normal and single-fault conditions of the control.

4.17 CONTROL, TYPE 1 ACTION – The actuation of an automatic control for which the manufacturing deviation and the drift (tolerance before and after certain conditions) of its operating value, operating time, or operating sequence have not been declared and tested under this Standard.

4.18 CONTROL, TYPE 2 ACTION – The actuation of an automatic control for which the manufacturing deviation and the drift (tolerance before and after certain conditions) of its operating value, operating time, or operating sequence have been declared and tested under this Standard.

4.19 CUTTING HEIGHT – The vertical distance between the blade-tip circle and the supporting surface of a lawn mower.

4.20 CUTTING WIDTH – For a single-blade mower, the diameter of the blade-tip circle. For a multi-blade mower, the width of a composite of all blade-tip circles measured perpendicular to the forward direction of the mower.

4.21 DEAD-MAN CONTROL – An operator control designed so that it will automatically interrupt power when the actuating force supplied by the operator is removed.

4.22 DEFORM – Any visible alteration of shape or dimension of a body caused by stresses induced by external forces.

4.23 DOUBLE INSULATION – An insulation system comprised of both basic insulation and supplementary insulation, with the two insulation systems physically separated and arranged so that they are not simultaneously subjected to the same deteriorating influences – temperature, contaminants, and the like – to the same degree. See Figure 4.1.

Documents
Document Sharing Hub
Full document details: UL 1447 2020

**Figure 4.1**

**Examples illustrating 4.23**

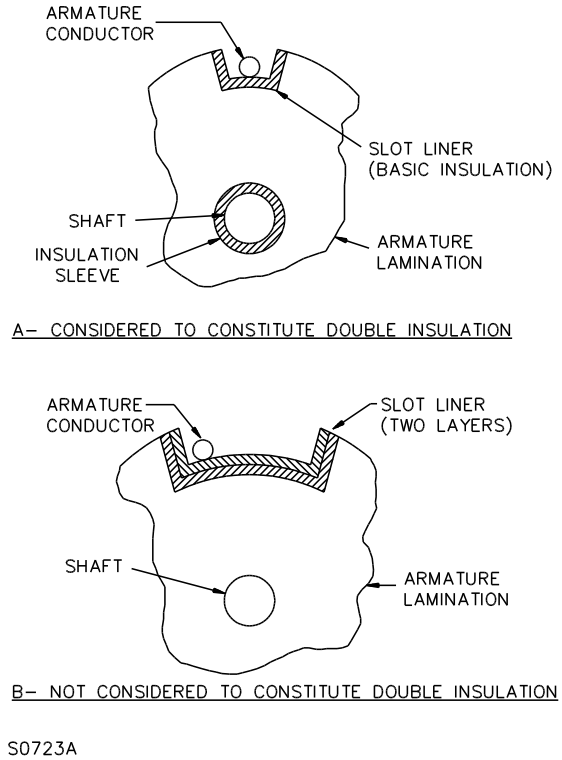


4.24 ENCLOSURE – That portion of the lawn mower that:

a) Renders inaccessible all or any part that may otherwise present a risk of electric shock or injury to persons; or

b) Reduces the propagation of flame that may be initiated by electrical disturbances occurring within.

4.25 GUARD – A part or an assembly provided for shielding an area that would otherwise introduce a risk of electric shock or injury to persons.

4.26 LEAKAGE CURRENT – All current or currents, including capacitively-coupled currents, that may be conveyed between exposed conductive surfaces of a lawn mower and ground or other exposed conductive surfaces of the lawn mower.

4.27 LIVE PART – A part electrically energized with respect to earth or energized with respect to some other part.

4.28 MAXIMUM OPERATING SPEED – The maximum revolutions per minute (rpm) obtainable by the motor under the conditions of the particular test where the term is used. For a cord-connected mower, it is the speed attained when the mower is energized from a 120V, (or 240V if applicable), 60Hz supply source with any blade speed controls set at maximum. For a battery-powered mower it is the speed attained after the battery has been fully charged in accordance with the mower manufacturer's instructions.

4.29 MINOR DIMENSION OF AN OPENING – The diameter of the largest cylindrical probe having a hemispherical tip that can be inserted through the opening with a force of 5 pounds (22.2N).

Documents
Document Sharing Hub
Full document details: UL 1447 2020

4.30 MOTOR – A power-producing machine that converts electrical energy into mechanical energy.

4.31 NORMAL STARTING MEANS – The primary mechanism intended to be actuated by the operator to start a mower's motor.

4.32 OPERATING CONTROL ZONE – The space enclosed by a cylinder with a radius of 15 inches (380 mm) having a horizontal axis that is:

a) Perpendicular to the fore-aft centerline of the mower; and

b) Tangent to the rearmost part of the mower handle, extending 4 inches (102 mm) beyond the outermost portion of each side of the handle. See Figure 4.2.

**Figure 4.2**

**Operating control zone**

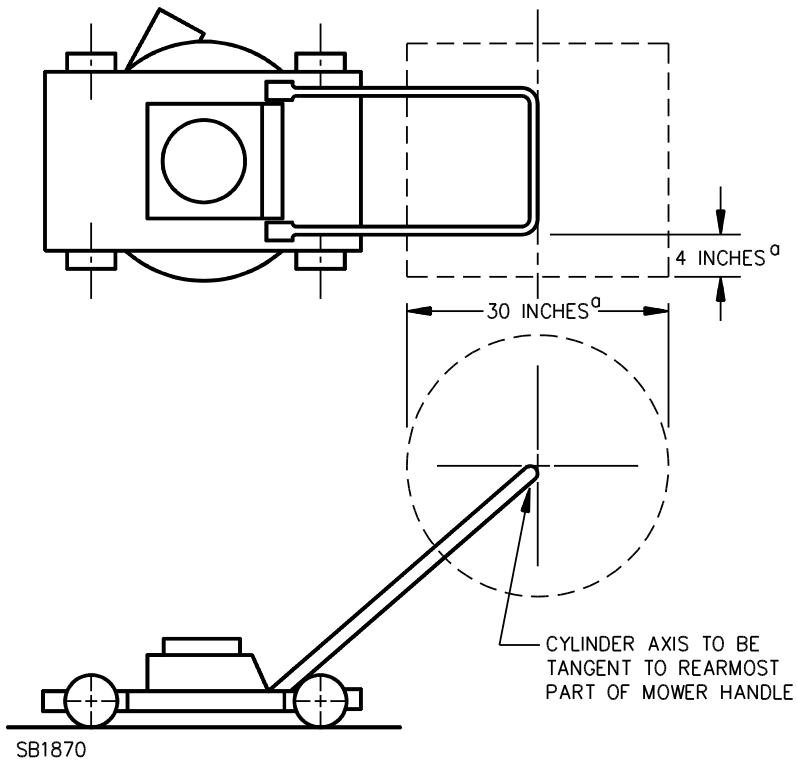


4.33 OPERATOR CONTROL – Any device necessary for operating a lawn mower including a drive-engaging control, a movable-guide control, a drive-speed changing control, and a deflector control.

4.34 OPERATOR ZONE – The space enclosed by a cylinder, from ground to 6 feet (1.63 m) above ground, with a radius of 20 inches (508 mm), having a vertical axis that is:

a) Located 13 inches (330 mm) behind the handle assembly when adjusted to the most unfavorable position; and

b) Centered on the fore-aft centerline of the cutting width. See Figure 4.3.

Documents
Document Sharing Hub
Full document details: UL 1447 2020

**Figure 4.3**

**Operator zone**

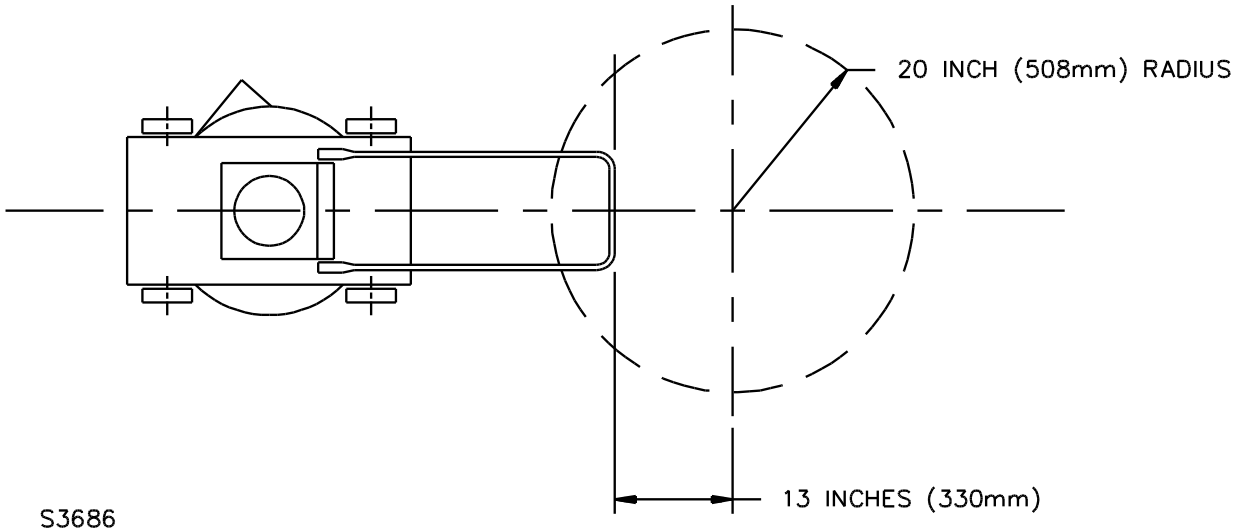


4.35 REEL-TYPE MOWER – A lawn mower that cuts grass by rotating one or more helically formed blades about a horizontal axis to provide a shearing action with a stationary cutter bar or bed knife.

4.36 REINFORCED INSULATION – An improved basic insulation with such mechanical and electrical qualities that it, in itself, provides the same degree of protection against electric shock as double insulation. It may consist of one or more layers of insulating material. It is acceptable in place of double insulation only in accordance with the Exception to 70.1.

4.37 ROBOTIC LAWN MOWER – An unattended lawn mower that operates automatically.

4.38 ROTARY MOWER – A lawn mower in which one or more cutting blades rotate in essentially a horizontal plane about at least one vertical axis.

4.39 SUPPLEMENTARY INSULATION – An independent insulation provided in addition to the basic insulation to protect against electric shock in case of mechanical rupture or electrical breakdown of the basic insulation. An enclosure of insulating material may form a part or the whole of the supplementary insulation.

4.40 SWING-OVER HANDLE – A handle that pivots from one end of a lawn mower to the other about a horizontal axis to allow reversing the direction of travel of the lawn mower without turning the lawn mower around.

4.41 WALK-BEHIND LAWN MOWER – A grass-cutting machine that:

a) Is either pushed or self-propelled;

Documents
Document Sharing Hub
Full document details: UL 1447 2020

b) Has a minimum cutting width of 12 inches (305 mm);

c) Employs a motor as the power source; and

d) Is controlled by an operator walking behind the mower.

## CONSTRUCTION

## 5 Components

### 5.1 General

5.1.1 A component of a product covered by this Standard shall:

a) Comply with the requirements for that component as indicated in 5.2 – 5.23;

b) Be used in accordance with it's rating established for the intended conditions of use;

c) Be used within its established use limitations or conditions of acceptability;

d) Additionally comply with the applicable requirements of this end product Standard; and

e) Not contain mercury.

*Exception No. 1: A component of a product covered by this Standard is not required to comply with a specific component requirement that:*

*a) Involves a feature or characteristic not required in the application of the component in the product;*

*b) Is superseded by a requirement in this Standard; or*

*c) Is separately investigated when forming part of another component, provided the component is used within its established ratings and limitations.*

*Exception No. 2: A component that complies with a UL component standard other than those specified in 5.2 – 5.23, is acceptable if:*

*a) The component also complies with the applicable component standard specified in 5.2 – 5.23; or*

*b) The component standard:*

*1) Is compatible with the ampacity and overcurrent protection requirements in ANSI/NFPA 70, where appropriate;*

*2) Considers long-term thermal properties of polymeric insulating materials in accordance with UL 746B; and*

*3) Any use limitations of the other component UL standard is identified and appropriately accommodated in the end use application. For example, a component used in a household application, but intended for industrial use and complying with the relevant component standard may assume user expertise not common in household applications.*

5.1.2 A component that is also intended to perform other functions, such as over current protection, ground-fault circuit-interruption, surge suppression, any other similar functions, or any combination thereof, shall comply additionally with the requirements of the applicable UL standard that cover devices that provide those functions.

AVA Documents
Document Sharing Hub
Full document details: UL 1447 2020

*Exception: Where these other functions are not required for the application and not identified as part of markings, instructions, or packaging for the appliance, the additional component UL standard need not be applied.*

5.1.3 A component not anticipated by the requirements of this Standard, not specifically covered by the component standards in 5.2 – 5.23, and that involves a risk of electric shock, fire, or personal injury, shall be additionally investigated in accordance with the applicable UL standard, and shall comply with Components – General, Section 5.1 (b) – (d).

5.1.4 With regard to a component being additionally investigated, reference to construction and performance requirements in another UL end product standard is appropriate where that standard anticipates normal and abnormal use conditions consistent with the application of UL 1447.

**5.2 Attachment plugs, receptacles, connectors, and terminals**

5.2.1 Attachment plugs, receptacles, appliance couplers, appliance inlets (motor attachment plugs), and appliance (flatiron) plugs, shall comply with UL 498. See 5.2.8.

*Exception No. 1: Attachment plugs and appliance couplers integral to cord sets or power supply cords are investigated in accordance with UL 817, and need not comply with UL 498.*

*Exception No. 2: A fabricated pin terminal assembly need not comply with UL 498, if it complies with Section 13, Live Parts; Section 15, Electrical Insulation; and Section 22, Spacings, of this Standard.*

5.2.2 Quick-connect terminals, both connectors and tabs, for use with one or two 22 – 10 AWG copper conductors, having nominal widths of 0.110, 0.125, 0.187, 0.205, and 0.250 inch (2.8, 3.2, 4.8, 5.2, and 6.3 mm), intended for internal wiring connections in appliances, or for the field termination of conductors to the appliance, shall comply with UL 310.

*Exception: Other sizes of quick-connect terminals shall be investigated with respect to crimp pull out, insertion-withdrawal, temperature rise, and all tests shall be conducted in accordance with UL 310.*

5.2.3 Single and multi-pole connectors for use in data, signal, control and power applications within and between electrical equipment, and that are intended for factory assembly to copper or copper alloy conductors, or for factory assembly to printed wiring boards, shall comply with UL 1977. See 5.2.8.

5.2.4 Wire connectors shall comply with UL 486A-486B.

5.2.5 Splicing wire connectors shall comply with UL 486C.

5.2.6 Multi-pole splicing wire connectors that are intended to facilitate the connection of hard-wired utilization equipment to the branch-circuit conductors of buildings shall comply with UL 2459. See 5.2.9.

5.2.7 Equipment wiring terminals for use with all alloys of copper, aluminum, or copper-clad aluminum conductors, shall comply with UL 486E.

5.2.8 Terminal blocks shall comply with UL 1059, and if applicable, be suitably rated for field wiring.

*Exception: A fabricated part performing the function of a terminal block need not comply with UL 1059, if the part complies with the requirements of Flexible Cord, Section 12.3; Section 13, Live Parts; Section 15, Electrical Insulation; and Section 22, Spacings, of this end product Standard. This exception does not apply to protective conductor terminal blocks.*

Documents
Document Sharing Hub
Full document details: UL 1447 2020

5.2.9 Female devices (such as receptacles, appliance couplers, and connectors) that are intended, or that may be used, to interrupt current in the end product, shall be suitably rated for current interruption of the specific type of load, when evaluated with its mating plug or connector. For example, an appliance coupler that can be used to interrupt the current of a motor load shall have a suitable horsepower rating when tested with its mating plug.

## 5.3 Batteries

5.3.1 Rechargeable lithium ion (Li-ion) cells shall comply with the requirements for secondary lithium cells specified in UL 1642.

## 5.4 Boxes and raceways

5.4.1 Electrical boxes and the associated bushings and fittings, and raceways, of the types specified in Wiring Methods and Materials of ANSI/NFPA 70 and that comply with the relevant UL standard (such as UL 514A, UL 514C, and UL 514D) and Components – General, Section 5.1, are considered to comply with the requirements of this Standard.

## 5.5 Capacitors and filters

5.5.1 The component requirements for a capacitor are not specified. A capacitor complying with UL 810 is considered to fulfill the requirements of 20.1.

5.5.2 Electromagnetic interference filters with integral enclosures that comply with UL 1283 are considered to fulfill the requirements of 20.1.

## 5.6 Controls

### 5.6.1 General

5.6.1.1 Auxiliary controls shall be evaluated using the applicable requirements of this end product Standard and the requirements in Section 18, Controls – End Product Test Parameters.

5.6.1.2 Operating (regulating) controls shall be evaluated using the applicable component standard requirements specified in 5.6.2 – 5.6.7, and if applicable, the requirements in Section 18, Controls – End Product Test Parameters, unless otherwise specified in this end product Standard.

5.6.1.3 Operating controls that rely upon software for the normal operation of the end product where deviation or drift of the control may result in a hazard, such as a speed control unexpectedly changing its output, shall comply with UL 991, UL 1998; and/or UL 60730-1

5.6.1.4 Protective (limiting) controls shall be evaluated using the applicable component standard requirements specified in 5.6.2 – 5.6.7, and if applicable, the parameters in Section 18, Controls – End Product Test Parameters, unless otherwise specified in this end product Standard.

5.6.1.5 Solid-state protective controls that do not rely upon software as a protective component shall comply with one UL 991, and/or UL 60730-1, except the Controls Using Software.

5.6.1.6 Protective controls that rely upon software as a protective component shall comply with UL 991, UL 1998 and/or UL 60730-1.

5.6.1.7 An electronic, non-protective control that is simple in design need only be subjected to the applicable requirements of this end product Standard. A control that does not include an integrated output

AVA Documents
Document Sharing Hub
Full document details: UL 1447 2020

or microprocessor, but does consist of a discrete switching device, capacitors, transistors, or resistors, is considered simple in design.

### 5.6.2 Electromechanical and electronic controls

5.6.2.1 A control, other than as specified in 5.6.2 – 5.6.7, shall comply with UL 244A, UL 873 or UL 60730-1.

### 5.6.3 Liquid level controls

5.6.3.1 A liquid level control shall comply with UL 244A, UL 873, UL 508, UL 60730-1, and UL 60730-2-15.

### 5.6.4 Motor and speed controls

5.6.4.1 A control used to start, stop, regulate or control the speed of a motor shall comply with UL 244A, UL 873, UL 508, UL 61800-5-1, or UL 60730-1.

### 5.6.5 Pressure controls

5.6.5.1 A pressure control shall comply with UL 873, UL 508 or UL 60730-2-6.

### 5.6.6 Temperature controls

5.6.6.1 A temperature control shall comply with UL 244A, UL 873, or UL 60730-1 and UL 60730-2-9

5.6.6.2 A temperature positive temperature coefficient (PTC) or a negative temperature coefficient (NTC) thermistor, that performs the same function as an operating or protective control shall comply with UL 1434.

5.6.6.3 A thermal cutoff shall comply with UL 60691.

### 5.6.7 Timer controls

5.6.7.1 A timer control shall comply with UL 244A or UL 60730-1, and UL 60730-2-7.

## 5.7 Cords, cables, and internal wiring

5.7.1 A cord set or power supply cord shall comply with UL 817.

5.7.2 Flexible cords and cables shall comply with UL 62. Flexible cord and cables are considered to fulfill this requirement when preassembled in a cord set or power supply cord complying with UL 817.

5.7.3 Internal wiring composed of insulated conductors shall comply with UL 758.

*Exception No. 1: Insulated conductors need not comply with UL 758, if they comply with UL 44, UL 83, UL 66 or the applicable UL standard for other insulated conductor types specified in Wiring Methods and Materials of NFPA 70.*

*Exception No. 2: Insulated conductors for specialty applications (e.g. data processing or communications) and located in a low-voltage circuit not involving the risk of fire or personal injury need not comply with UL 758.*

AVA Documents
Document Sharing Hub
Full document details: UL 1447 2020

### 5.8 Cord reels

5.8.1 A cord reel shall comply with special use cord reel requirements of UL 355.

### 5.9 Film-coated wire (magnet wire)

5.9.1 The component requirements for film coated wire and Class 105 (A) insulation systems are not specified.

5.9.2 Film-coated wire in intimate combination with one or more insulators, and incorporated in an insulation system rated Class 120 (E) or higher, shall comply with the magnet wire requirements in UL 1446.

### 5.10 Gaskets, seals and tubing

5.10.1 Gaskets, o-rings, seals, and tubing the failure of which would increase the risk of fire, electric shock, injury to persons, or other hazards shall comply with UL 157.

### 5.11 Ground-fault, arc-fault, and leakage current detectors / interrupters

5.11.1 Ground-fault circuit-interrupters (GFCI) for protection against electrical shock shall comply with UL 943. The following statement, or equivalent, shall be included as a marking near the GFCI, or as an instruction in the manual: " Press the TEST button (then RESET button) every month to assure proper operation."

5.11.2 Appliance-leakage-current interrupters (ALCI) for protection against electrical shock shall comply with UL 943B. An ALCI is not considered an acceptable substitute for a GFCI when NFPA 70 requires a GFCI.

5.11.3 Equipment ground-fault protective devices shall comply with UL 1053, and the applicable requirements of UL 943.

5.11.4 Arc-fault circuit-interrupters (AFCI) shall comply with UL 1699.

5.11.5 Leakage-current detector-interrupters (LCDI) and any shielded cord between the LCDI and appliance shall comply with UL 1699.

### 5.12 Insulation systems

5.12.1 Materials used in an insulation system that operates above Class 105 (A) temperatures shall comply with UL 1446.

5.12.2 All insulation systems employing integral ground insulation shall comply with the requirements specified in UL 1446.

### 5.13 Light sources and associated components

5.13.1 Lampholders and indicating lamps shall comply with UL 496.

5.13.2 Lighting ballasts shall comply with UL 935 and UL 1029.

*Exception No. 1: Ballasts forming part of a luminaire that complies with the applicable UL luminaire standard are considered to comply with this requirement.*

AVA Documents
Document Sharing Hub
Full document details: UL 1447 2020

*Exception No. 2: Ballasts for other light sources shall comply with the appropriate UL standard.*

5.13.3 Light emitting diode (LED) light sources shall comply with UL 8750.

*Exception No. 1: LED light sources forming part of a luminaire that complies with an appropriate UL luminaire standard are considered to fulfill this requirement.*

*Exception No. 2: Individual LED light sources mounted on printed-wiring boards and intended for indicating purposes need not comply with UL 8750, but shall comply with the applicable requirements of this end product Standard.*

### 5.14 Marking and labeling systems

5.14.1 A marking and labeling system shall comply with UL 969, under the specified environmental conditions.

*Exception: A marking or labeling system that complies with Section 44, Permanency of Marking Tests, of this Standard is considered to fulfill the requirement.*

### 5.15 Motors and motor overload protection

#### 5.15.1 General

5.15.1.1 General-purpose type motors having a NEMA frame size shall comply with the requirements specified in General-Purpose Type Motors, Section 5.15.2. This includes fractional HP motors rated up to 1 HP (typically NEMA frame sizes 42, 48, or 56), and integral HP motors rated 1 HP and greater (typically NEMA frame sizes 140 – 449T).

5.15.1.2 Motors not enclosed, or partially enclosed, by the end product enclosure shall comply with the requirements specified in General-Purpose Type Motors, Section 5.15.2.

5.15.1.3 Component type motors completely enclosed within the end product enclosure shall comply with the requirements specified in General-Purpose Type Motors, Section 5.15.2 or Component Type Motors, Section 5.15.3.

5.15.1.4 Motors located in a low voltage circuit are evaluated for the risk of fire and personal injury in accordance with the applicable requirements of this end product Standard.

5.15.1.5 Low voltage component fans that comply with UL 507, are considered to comply with the requirements of Section 4.16, Motors, of this Standard.

#### 5.15.2 General-purpose type motors

5.15.2.1 A general-purpose type motor shall comply with UL 1004-1.

#### 5.15.3 Component type motors

5.15.3.1 Component type motors shall comply with either 5.15.3.2 or 5.15.3.3.

5.15.3.2 The motor shall comply with UL 1004-1 except as noted in Table 5.1.

Documents
Document Sharing Hub
Full document details: UL 1447 2020

**Table 5.1**
**Superseded requirements**

| UL 1004-1 Exempted Requirement | Superseded by UL 1447 Requirements |
|---|---|
| Section 6, Current and Horsepower Relation | 31.3 |
| Section 15, Cord-Connected Motors | Section 12, Supply Connections |
| Section 17, Factory Wiring Terminals and Leads | Section 14, Internal Wiring |
| Section 22, Electrical Insulation | Section 15, Electrical Insulation |
| Section 28, Non-Metallic Functional Parts | Section 6, Frame and Enclosure<br>Section 15, Electrical Insulation<br>Section 4.16, Motors |
| 7.2, Solid-State Controls | Controls, Section 5.6 |
| 9.1.4, Non-metallic enclosure thermal aging | Polymeric Enclosures, Section 6.3 |
| 9.2 – 9.4, Motor enclosure | Section 4.16, Motors |
| Sections 10 and 11, Grounding | Section 23, Grounding |
| Section 12, Ventilation Openings: only applicable where the openings are on surfaces considered to be the appliance enclosure. | Section 4.16, Motors<br>Section 7, Accessibility of Live Parts |
| Section 13, Accessibility of Uninsulated Live Parts, Film-Coated Wire, and Moving Parts | Section 4.16, Motors<br>Section 7, Accessibility of Live Parts |
| Section 14, Protection Against Corrosion | Protection Against Corrosion, Section 6.5 |
| Available fault current ratings for motor start and running capacitors, 26.6: not applicable for cord and plug connected appliances. | Section 20, Capacitors |
| Section 27, Switch, is not applicable to centrifugal starting switches | Section 17, Switches and Controls |
| With the exception of Sections 35 and 40 (Resilient Elastomer Mounting and Electrolytic Capacitor Tests, respectively), the performance tests in UL 1004-1 are not applicable | All applicable performance tests |
| Only the following marking requirements specified in 43.1 of UL 1004-1 are applicable: manufacturer's name or identification; rated voltage; rated frequency; number of phases if greater than 1; and multi-speed motors, other than a shaded-pole or a permanent-split-capacitor motor, shall be marked with the amperes and horsepower at each speed | Section 50, Markings – General |

5.15.3.3 The motor shall comply with the applicable component requirements in Components – General, Section 5.1, the following construction requirements, and the applicable performance requirements (when tested in conjunction with the end-product), of this end-product Standard:

a) Protection Against Corrosion, 6.5;

b) Internal Wiring, Section 14;

c) Electrical Insulating, Section 15;

d) Motors, Section 4.16;

e) Capacitors, Section 20;

f) Spacings, Section 22; and

g) Grounding, Section 23.

Documents
Document Sharing Hub
Full document details: UL 1447 2020

### 5.15.4 Motor overload protection

5.15.4.1 Thermal protection devices integral with the motor shall comply with one of the following:

a) UL 2111;

b) UL 1004-3; or

c) UL 60730-1; and UL 60730-2-2; in conjunction with UL 1004-3, (to evaluate the motor-protector combination).

5.15.4.2 Impedance protection shall comply with UL 2111 or UL 1004-2

5.15.4.3 Electronic protection integral to the motor shall comply with UL 1004-7.

5.15.4.4 Except as indicated in 5.15.4.3, electronically protected motor circuits shall comply with one of the following (see Motor and Speed Controls, Section 5.6.4, for basic control requirements):

a) UL 991. When the protective electronic circuit is relying upon software as a protective component, it shall comply with the requirements in UL 1998. If software is relied upon to perform a safety function, it shall be considered software Class 1;

b) UL 60730-1; If software is relied upon to perform a safety function, it shall be considered software Class B; or

c) UL 61800-5-1.

*Exception: Compliance with the above standards is not required for an electronically protected motor circuit if there is no risk of fire, electric shock, or casualty hazard during abnormal testing with the motor electronic circuit rendered ineffective; compliance with the applicable requirements of this end product Standard is then required.*

## 5.16 Overcurrent protection

5.16.1 Fuses shall comply with UL 248-1; and the applicable UL 248 Part (e.g. UL 248-5). Defined use fuses that comply with UL 248-1 and another applicable UL standard for fuses are considered to fulfill this requirement.

5.16.2 Fuseholders shall comply with UL 4248-1, and the applicable Part (e.g. UL 4248-9).

5.16.3 Circuit breakers shall comply with UL 489.

*Exception: Circuit breakers used in telecommunications circuitry that comply with UL 489A, need not comply with UL 489.*

5.16.4 Circuit breakers having integral ground fault circuit interrupter capability for protection against electrical shock shall additionally comply with UL 943.

5.16.5 Supplementary protectors shall comply with UL 1077.

5.16.6 Fusing resistors shall comply with UL 1412.

Documents
Document Sharing Hub

Full document details: UL 1447 2020

## 5.17 Polymeric materials and enclosures

5.17.1 Polymeric enclosure materials or a polymeric device which provides mechanical support or electrical insulation or separation whose deterioration would reduce spacings between uninsulated live parts or could result in a risk of fire, electric shock, or risk of injury shall comply with UL 746A, UL 746B, and UL 746C unless superseded by the requirements in this Standard.

5.17.2 Polymeric materials molded or fabricated by a source other than the manufacturer, shall be identified according to UL 746D.

5.17.3 Metallized or painted polymeric parts or enclosures shall comply with the applicable requirements of UL 746C. This requirement is not applicable to exterior surfaces of polymeric enclosure materials or parts provided that the metallized coating or paint does not offer a continuous path for an internal flame to propagate externally.

## 5.18 Printed-wiring boards

5.18.1 Printed-wiring boards, including the coatings, shall comply with UL 796.

*Exception: A printed-wiring board in a Class 2 non-safety circuit is not required to comply with the bonding requirements in UL 796, if the board is separated from parts of other circuits such that loosening of the bond between the foil conductor and the base material will not result in the foil conductors or components coming in contact with parts of other circuits of the control or of the end use product.*

5.18.2 A printed-wiring board containing circuitry in a line-connected circuit or a safety circuit shall comply with the direct-support of live parts requirements.

5.18.3 Unless otherwise specified, a printed-wiring board shall have a minimum flame classification of V-2.

*Exception: A printed-wiring board located in a secondary circuit that complies with the requirements for Class 2 or limited voltage/current circuits have a minimum flame Class of HB.*

## 5.19 Semiconductors and small electrical and electronic components

5.19.1 A power switching semiconductor device that is relied upon to provide isolation to ground shall comply with UL 1557.

5.19.2 An optical isolator that is relied upon to provide isolation between primary and secondary circuits or between other circuits as required by this end product Standard shall comply with UL 1577.

5.19.3 Except as otherwise specified in this standard, component requirements are not specified for small electrical parts on printed-wiring boards, including diodes, transistors, resistors, inductors, integrated circuits, and capacitors not directly connected to the supply source.

5.19.4 Where an electronic component is determined to be a critical component during the Section 34, Abnormal Operation Test, in this Standard, the circuit shall comply with one or both of the following standards (see Protective Controls (Limitation Controls), Section 18.4, for the test parameters to be used):

a) UL 991, including its Follow-Up Program; and as applicable, the UL 1998 for controls that rely upon software as a protective component; and/or

b) UL 60730-1.

Documents
Document Sharing Hub

Full document details: UL 1447 2020

5.19.5 A critical component is a component that performs one or more safety-related functions whose failure results in a condition, such as the risk of fire, electric shock, or injury to persons, in the end product application.

5.19.6 A critical component may also be identified using a failure-mode and effect analysis (FMEA) in accordance with the Failure-Mode and Effect Analysis (FMEA), requirements of UL 991.

5.19.7 Portions of a circuit comprised of a microcontroller or other programmable device that performs a back-up, limiting, or other safety function intended to reduce the risk of fire, electric shock, or injury to persons shall comply with Controls Using Software requirements in UL 60730-1.

**5.20 Supplemental insulation, insulating bushings, and assembly aids**

5.20.1 The requirements for supplemental insulation (e. g. tape, sleeving or tubing) are not specified unless the insulation or device is required to comply with a performance requirement of this Standard. In such cases, the insulation or device shall comply with the following applicable standards:

a) Insulating tape shall comply with UL 510;

b) Sleeving shall comply with UL 1441; or

c) Tubing shall comply with UL 224.

5.20.2 Wire positioning devices required to comply with the requirements of this Standard shall comply with UL 1565.

5.20.3 Insulating bushings shall comply with UL 635 and be suitable for the application with respect to the hole size and shape, maximum use temperature and wire size or type. To determine if the hole size and shape is suitable for the bushing, the applicable test specified in this Standard (e.g. Strain Relief Test, Push-Back Relief Test, and Mold Stress Evaluation Test) should be conducted.

**5.21 Switches**

5.21.1 Switches shall comply with UL 1054, UL 61058-1, UL 20, and UL 773A as applicable:

*Exception: Switching devices that comply with the applicable UL standards for specialty applications (e.g. transfer switch equipment), industrial use (e. g. contactors, relays, auxiliary devices), or are integral to another component (e.g. switched lampholder) need not comply with this requirement.*

5.21.2 A clock-operated switch, in which the switching contacts are actuated by a clock-work, by a gear-train, by electrically-wound spring motors, by electric clock-type motors, or by equivalent arrangements, shall comply with UL 917 or UL 60730-1 and UL 60730-2-7.

5.21.3 A timer or time switch, incorporating electronic timing circuits or switching circuits, with or without separable contacts, that functions as a protective control, shall comply with the requirements for a protective control. See 5.6.1.4.

**5.22 Transformers**

5.22.1 General-purpose transformers shall comply with UL 5085-1 and UL 5085-2.

*Exception: A transformer that complies with UL 1411 and that is used in a circuit involving an audio or video component, complies with the intent of this requirement.*

Documents
Document Sharing Hub
Full document details: UL 1447 2020

5.22.2 Class 2 and Class 3 transformers shall comply with UL 5085-1 and UL 5085-3.

*Exception: Transformers located in a low voltage circuit, and that do not involve a risk of fire or personal injury, need not comply with this requirement.*

### 5.23 Valves (electrically operated) and solenoids

5.23.1 Electrically operated valves shall comply with UL 429 or UL 60730-1 and UL 60730-2-8.

*Exception: Automatic valves intended for use with natural gas, manufactured gas, LP-gas or LP-gas-air mixtures shall comply with ANSI Z21.21a/CSA 6.5a.*

5.23.2 Solenoids shall comply with the applicable construction and performance requirements of this end product Standard.

## 6 Frame and Enclosure

### 6.1 General

6.1.1 The frame and enclosure of a lawn mower shall be formed and assembled so that it has the strength and rigidity necessary to resist the abuses to which is subjected, without introducing a risk of fire, electric shock, or injury to persons due to total or partial collapse with resulting reduction of spacings, loosening or displacement of parts, or other defects.

6.1.2 Among the factors taken into consideration when a frame or enclosure is investigated are its:

a) Mechanical strength;

b) Resistance to impact;

c) Moisture-absorptive properties;

d) Combustibility and resistance to ignition from electrical sources;

e) Resistance to corrosion;

f) Resistance to distortion at temperatures to which the enclosure may be subjected under conditions of normal or abnormal use; and

g) Dielectric properties, insulation resistance, and resistance to arc tracking.

6.1.3 Materials that are exposed to oil, acids, solvents, reagents, cleaning agents, or ozone as part of the use or application of the lawn mower shall not be adversely affected by these environments as determined by appropriate tests.

6.1.4 An edge, a projection, a corner, or the like of an enclosure, a frame, a guard, a handle, or the like shall be smooth and well-rounded, and not sufficiently sharp to constitute a risk of injury to persons in normal use and maintenance of a lawn mower.

6.1.5 If breakage or deformation of an enclosure, a frame, a guard, or the like, results in a risk of injury to persons, the material of the part shall have the properties required to meet the expected loading conditions without breakage or deformation.

6.1.6 With regard to the requirement in 6.1.5, a component of a lawn mower that is exposed to impact shall withstand the ball-impact test described in Section 29, Impact Test:

Documents
Document Sharing Hub
Full document details: UL 1447 2020

a) Without cracking that affects the functional strength of the part;

b) Without being affected to the extent that parts presenting a risk of electric shock or injury to persons would be exposed to unintentional contact; and

c) Without affecting the intended mechanical performance of the lawn mower.

6.1.7 A catcher assembly constructed of a woven fabric shall comply with the requirements of 65.1 and 65.2.

## 6.2 Metallic enclosures

6.2.1 Cast and sheet-metal portions of the enclosure shall not be thinner than specified in Table 6.1, unless the enclosure is found to be acceptable when investigated under the considerations specified in 6.1.2.

**Table 6.1**
**Minimum acceptable thickness of metal enclosure**

| Metal | Minimum thickness, inch (mm) | | | |
|---|---|---|---|---|
| | At small, flat, unreinforced surfaces and at surfaces that are reinforced by curving, ribbing, or the like | | At relatively large unreinforced flat surfaces | |
| Die-cast metal | 3/64 | (1.2) | 5/64 | (2.0) |
| Cast malleable iron | 1/16 | (1.6) | 3/32 | (2.4) |
| Other cast metal | 3/32 | (2.4) | 1/8 | (3.2) |
| Uncoated sheet steel | 0.026 | (0.66) | 0.026 | (0.66) |
| Galvanized sheet steel | 0.029 | (0.74) | 0.029 | (0.74) |
| Nonferrous sheet metal | 0.036 | (0.91) | 0.036 | (0.91) |

## 6.3 Polymeric enclosures

6.3.1 A polymeric enclosure shall be of a material complying with the tests specified in Section 45, Polymeric Materials Other Than HB, or of a material classified HB complying with the tests specified in Section 46, Polymeric Materials Classified HB.

6.3.2 The material used as the enclosure shall be suitable for use at the maximum temperature to which it is exposed in normal use. Material exposed to temperatures in excess of 80° C (176° F) shall be investigated with respect to aging.

## 6.4 Handles

6.4.1 Other than as noted in 6.4.3, the handles or surfaces most likely to be grasped by the user during the normal operation of a lawn mower shall be made of or covered with an insulating material that complies with the requirements in 6.4.4, 6.4.5, Handle Durability Test, Section 35, Dielectric Voltage-Withstand Test, Section 79 and the second entry in Table 79.1.

6.4.2 With reference to 6.4.1, examples of surfaces that are likely to be grasped by the user during normal operation include a lever, handle, or button for a switch or other operator control. Surfaces of a guard for a switch or other operator control are also included if located where likely to be grasped.

AVA Documents
Document Sharing Hub
Full document details: UL 1447 2020

Operator-handled controls, such as wheel adjustments, collector bag releases, and the like, that are remote from the handles of the lawn mower are not included.

6.4.3 The outer surfaces of a handle or other area likely to be grasped during normal operation may be of electrically conductive material if:

a) Insulation complying with the requirements in 79.1, and the second entry in Table 79.1, is interposed between the surfaces likely to be grasped and:

1) The cutting member; and

2) Any metallic guard for the cutting member; and

b) Surfaces likely to be grasped:

1) Are double-insulated from live parts; or

2) Do not enclose electrical components and are separated from all dead metal parts that enclose electrical components by insulation complying with the requirements in 79.1, and the second entry in Table 79.1.

6.4.4 The insulating material specified in 6.4.1, shall be of a type and thickness that make it acceptable as the sole insulation between a live part and a dead metal part. If it overlies and is in intimate contact with dead metal, the insulating material shall be at least 5/64 inch (2.0 mm) thick.

*Exception: The thickness of the insulating material may be less than 5/64 inch (2.0 mm) if the material is found to be acceptable when judged under the considerations specified in 6.1.2.*

6.4.5 An assembly screw in an area likely to be grasped that secures a covering of insulating material to a metal enclosure and threads into a metal enclosure containing electrical components or into a metal enclosure that contacts another metal enclosure containing live parts:

a) Shall not be accessible to the probe illustrated in Figure 7.3, when inserted to a depth of 1 inch (25.4 mm); or

b) Shall not be recessed less than 1/8 inch (3.2 mm) behind the outer surface of the insulating material if the opening will not admit a 3/8-inch (9.5-mm) diameter rod.

## 6.5 Protection against corrosion

6.5.1 Iron and steel parts shall be protected against corrosion by enameling, galvanizing, plating, or other equivalent means if the corrosion of such unprotected parts introduces a risk of fire, electric shock, or injury to persons.

*Exception No. 1: In certain instances in which the oxidation of iron or steel due to the exposure of the metal to air and moisture is not likely to be appreciable – thickness of metal and temperature also being factors – surfaces of sheet steel and cast-iron parts within an enclosure may not be required to be protected against corrosion.*

*Exception No. 2: Bearings, laminations, or minor parts of iron or steel, such as washers, screws, and the like need not be protected against corrosion.*

Documents
Document Sharing Hub

Full document details: UL 1447 2020