UL 1450

STANDARD FOR SAFETY

Motor-Operated Air Compressors, Vacuum Pumps, and Painting Equipment

Documents
Document Sharing Hub

Full document details: UL 1450 2021

Documents
Document Sharing Hub

Full document details: UL 1450 2021

UL Standard for Safety for Motor-Operated Air Compressors, Vacuum Pumps, and Painting Equipment, UL 1450

Fourth Edition, Dated May 5, 2010

Summary of Topics

The revisions to ANSI/UL 1450 dated May 27, 2021 include the following changes in requirements:

– Revision of Cord Tag Requirements; 56.2

– Update of Standard Reference For Ultraviolet Light Test; SA10.9.1 and SA10.9.2

Text that has been changed in any manner or impacted by UL's electronic publishing system is marked with a vertical line in the margin.

The revised requirements are substantially in accordance with Proposal(s) on this subject dated April 9, 2021.

All rights reserved. No part of this publication may be reproduced, stored in a retrieval system, or transmitted in any form by any means, electronic, mechanical photocopying, recording, or otherwise without prior permission of UL.

UL provides this Standard "as is" without warranty of any kind, either expressed or implied, including but not limited to, the implied warranties of merchantability or fitness for any purpose.

In no event will UL be liable for any special, incidental, consequential, indirect or similar damages, including loss of profits, lost savings, loss of data, or any other damages arising out of the use of or the inability to use this Standard, even if UL or an authorized UL representative has been advised of the possibility of such damage. In no event shall UL's liability for any damage ever exceed the price paid for this Standard, regardless of the form of the claim.

Users of the electronic versions of UL's Standards for Safety agree to defend, indemnify, and hold UL harmless from and against any loss, expense, liability, damage, claim, or judgment (including reasonable attorney's fees) resulting from any error or deviation introduced while purchaser is storing an electronic Standard on the purchaser's computer system.

Documents
Document Sharing Hub

Full document details: UL 1450 2021

No Text on This Page

Documents
Document Sharing Hub

Full document details: UL 1450 2021

UL 1450

Standard for Motor-Operated Air Compressors, Vacuum Pumps, and Painting Equipment

First Edition – February, 1981
Second Edition – May, 1993
Third Edition – July, 2003

Fourth Edition

May 5, 2010

This ANSI/UL Standard for Safety consists of the Fourth Edition including revisions through May 27, 2021.

The most recent designation of ANSI/UL 1450 as an American National Standard (ANSI) occurred on May 27, 2021. ANSI approval for a standard does not include the Cover Page, Transmittal Pages, and Title Page.

Comments or proposals for revisions on any part of the Standard may be submitted to UL at any time. Proposals should be submitted via a Proposal Request in UL's On-Line Collaborative Standards Development System (CSDS) at https://csds.ul.com.

UL's Standards for Safety are copyrighted by UL. Neither a printed nor electronic copy of a Standard should be altered in any way. All of UL's Standards and all copyrights, ownerships, and rights regarding those Standards shall remain the sole and exclusive property of UL.

COPYRIGHT © 2021 UNDERWRITERS LABORATORIES INC.

Documents
Document Sharing Hub

Full document details: UL 1450 2021

No Text on This Page

Documents
Document Sharing Hub

Full document details: UL 1450 2021

CONTENTS

INTRODUCTION

1 Scope 7
2 Glossary 7
3 Components 9
4 Units of Measurement 9
5 References 9
6 Attachments 10
7 Instructions Provided with the Product 10

CONSTRUCTION

8 General 10
9 Enclosure 10
10 Mechanical Assembly 14
11 Protection Against Corrosion 15
12 Accessibility of Uninsulated Live Parts and Film-Coated Wire 15
13 Supply Connections 21
13.1 Cord-connected products 21
13.2 Strain relief 24
13.3 Bushings 24
13.4 Permanently connected products 25
14 Current-Carrying Parts 26
15 Insulating Material 27
16 Gaskets and Seals 27
17 Internal Wiring 27
17.1 Mechanical protection 27
17.2 Types of wire 28
17.3 Splices and connections 28
18 Separation of Circuits 29
19 Capacitors 29
20 Grounding 30
20.1 General 30
20.2 Grounding identification 31
21 Double Insulation 31
22 Lampholders 32
23 Motors 32
23.1 Construction 32
23.2 Overload protection 32
23.3 Brushes and brush holders 33
24 Overload- or Thermal-Protective Devices 34
25 Receptacles 34
26 Switches and Controls 35
27 Spacings 35
27A Alternative Spacings – Clearances and Creepage Distances 37
27B Low Voltage Limited Energy Circuits 37

PROTECTION AGAINST INJURY TO PERSONS

28 General 38
29 Sharp Edges 38
30 Enclosures and Guards 38
31 Materials 40

AVA Documents
Document Sharing Hub
Full document details: UL 1450 2021

32 Surface Temperatures 40
33 Stability 41
34 Strength of Handles and Mounting Means 41
35 Rotating or Moving Members 42
36 Pressure Vessels and Parts Subject to Pressure 42
36.1 Pressure vessel 42
36.2 Parts subject to pressure 43
37 Pressure Relief Means 44
38 Pressure-Regulating Control Switches 45
39 Switches, Controls, and Interlocks 46

PERFORMANCE

40 General 47
41 Leakage Current Test 47
42 Leakage Current Test Following Humidity Conditioning 50
43 Starting Current Test 50
44 Loaded Starting Test 51
45 Input Test 51
46 Temperature Test 51
46.1 General 51
46.2 Maximum normal load 56
47 Grounding Continuity Test 57
48 Dielectric Voltage Withstand Test 57
49 Resistance to Moisture Test 58
50 Paint Entry Test 62
51 Test on Switches and Controls 62
52 Strain Relief Test 63
53 Push-Back Strain Relief Test 63
54 Abnormal Operation Test 63
55 Accelerated Aging Test 64
56 Permanence of Marking Tests 64
57 Vibration Test 65
58 Hydrostatic Strength Test 66

MANUFACTURING AND PRODUCTION TESTS

59 Dielectric Voltage Withstand 66
60 Grounding Continuity 67
61 Pressure Vessel Assembly 68
62 Start-to-Discharge of Pressure-Relief Device 68

RATING

63 Details 68

MARKING

64 Details 69
64.1 General 69
64.2 Permanently connected products 70
64.3 Cord-connected products 71
64.4 Household type products 71
65 Cautionary 72

AVA Documents
Document Sharing Hub
Full document details: UL 1450 2021

INSTRUCTION MANUAL

66 General 75
67 Operating and Installation Instructions 76
68 User-Maintenance Instructions 76
69 Grounding Instructions 77
70 Double-Insulation Instructions 79

BATTERY-OPERATED PRODUCTS

71 Scope 79
72 Construction 80
73 Performance 81

SUPPLEMENT SA – HIGH-PRESSURE PAINT SPRAYING PRODUCTS

INTRODUCTION

SA1 Scope 83

CONSTRUCTION

SA2 General 83
SA3 Hoses 83
SA3.1 General 83
SA3.2 Electrical bonding 84

PROTECTION AGAINST INJURY TO PERSONS

SA4 Trigger Guard 84
SA5 Spray Tip Guard 85

PERFORMANCE

SA6 Injection Test 86
SA7 Paint Entry Test 87
SA8 Spray Gun Assembly Tests 88
SA8.1 General 88
SA8.2 Drop test 88
SA8.3 Mold stress-relief distortion test 88
SA9 Gaskets and Seals Tests 88
SA9.1 Accelerated aging test 88
SA9.2 Immersion test 89
SA10 Hose Tests 89
SA10.1 Proof-pressure test 89
SA10.2 Minimum burst pressure test 89
SA10.3 Leakage test 90
SA10.4 Change in length test 90
SA10.5 Flex Impulse test 90
SA10.6 Electrical resistance test 91
SA10.7 Accelerated air-oven aging test 91
SA10.8 Ozone test 91
SA10.9 Ultraviolet-light test 91
SA10.10 Cold bend test 91

AVA Documents
Document Sharing Hub
Full document details: UL 1450 2021

SA10.11 Solvent exposure tests 92
SA10.12 Pull force test 93
SA10.13 Flexing test 93

MANUFACTURING AND PRODUCTION TESTS

SA11 Production-Line Tests 94

MARKING

SA12 Details 94
SA13 Cautionary 95

INSTRUCTION MANUAL

SA14 Operating Instructions 96
SA15 User-Maintenance Instructions 96
SA16 Important Safety Instructions 97

SUPPLEMENT SB – *Deleted*

APPENDIX A

Standards for Components 102

Appendix B – *Deleted*

Documents
Document Sharing Hub
Full document details: UL 1450 2021

INTRODUCTION

1 Scope

1.1 These requirements cover household and commercial air compressors, vacuum pumps, inflators (both compressor-type and blower-type inflators), paint sprayers, paint mixers, and paint pigment dispensers intended for indoor or outdoor use or both in accordance with the National Electrical Code, ANSI/NFPA 70. These requirements also cover motor-operated air compressors intended for use with sprinkler systems in accordance with the Standard for Installation of Sprinkler Systems, NFPA 13, and the National Electrical Code, ANSI/NFPA 70.

1.2 These requirements do not cover products:

a) Rated more than 600 V,

b) Employing a universal motor rated more than 250 V, or

c) Intended for installation and use in a hazardous location.

1.3 These requirements do not cover medical and dental products; products intended to be used in heating, air conditioning, or refrigeration systems; paint heaters; electrostatic paint spraying products; or other products covered by separate requirements.

1.4 These requirements do not cover pneumatic tools and accessories that are covered by the Outline for Investigation for Portable Pneumatic Tools, Subject 7700-1.

1.5 These requirements do not cover industrial compressors that are primarily supplied to an individual customer specification with regard to pressure, flow, electrical supply, or optional equipment.

2 Glossary

2.1 For the purpose of this standard the following definitions apply.

2.2 AUTOMATICALLY CONTROLLED PRODUCT – A product is considered to be automatically controlled under any one or more of the following conditions if:

a) The repeated starting of the product, beyond one complete predetermined cycle of operation to the point where some form of limit switch opens the circuit, is independent of any manual control.

b) During any single predetermined cycle of operation, the motor is caused to stop and restart one or more times.

c) Upon energizing the product, the initial starting of the motor may be intentionally delayed beyond normal, conventional starting.

d) During any single predetermined cycle of operation, automatic changing of the mechanical load may reduce the motor speed sufficiently to reestablish starting-winding connections to the supply circuit.

2.3 EQUIPMENT, FIXED – Equipment that is intended for permanent connection to the electrical supply. This type of equipment may be physically secured to the supporting surface.

2.4 EQUIPMENT, MOVABLE – Cord-connected equipment that is intended to be moved from location to location during and in between performing its intended function. This type of equipment is not supported by the user, but supported by the ground or by other supporting surface during use.

AVA Documents
Document Sharing Hub
Full document details: UL 1450 2021

2.5 EQUIPMENT, STATIONARY – Equipment that is cord-connected, but is not required to be moved from its original location during or in between performing its intended function.

2.6 FLASH POINT – The minimum temperature of a liquid at which vapor is evolved in sufficient quantity to form a flammable mixture with the air near the surface of the liquid or within the test vessel.

2.7 HAND-HELD PRODUCT, HAND-GUIDED PRODUCT – A portable product that during use is contacted by the hand of the user for purposes of electrical or physical control but not for complete support.

2.8 HAND-HELD HIGH-PRESSURE PAINT SPRAYER – A movable spraying system intended to be held in the hand during normal use that consists of a paint reservoir integral to the spray gun and pump assembly that operates at a pressure of 360 psi (2482 kPa) or greater at the spray tip.

2.9 HAND-SUPPORTED PRODUCT – A product that is physically supported by any part of the body of the user during the performance of its intended electrically-operated functions, such as a portable paint sprayer with an integral motor.

2.10 HIGH-PRESSURE AIRLESS PAINT SPRAYER – A spraying system employing a separate high-pressure liquid pump assembly connected by a high-pressure liquid hose to a spray gun that operates at a pressure of 360 psi (2482 kPa) or greater.

2.11 HIGH-PRESSURE PAINT SPRAYING PRODUCT – A term that applies to both a hand-held high-pressure paint sprayer and a high-pressure airless paint sprayer.

2.12 HOUSEHOLD-USE PRODUCT – A product that complies with Household Type Products, Section 64.4, and has an instruction manual that complies with 66.6.

2.13 INDOOR-USE PRODUCT – A product marked in accordance with 65.14 that is intended to be used in an indoor location and where wet contact is not likely to occur.

2.14 INFLATOR – A type of device that falls under one of the following two categories:

a) Blower-Type Inflator – An inflator product where the primary method to provide the inflation function is to generate air movement by rotation of an impeller or blade configuration in order to blow air out of the inflator outlet and into the inflatable product. These types are used to inflate low pressure objects, such as air mattresses and pool toys, and they do not contain any type of pressurized vessel.

b) Compressor-Type Inflator – An inflator product where the primary method to provide the inflation function is to compress air in order to cause air movement through pressure differentials, thereby forcing air from the inflator outlet into the inflatable product. These types are used to inflate objects such as automobile tires and may or may not contain a pressurized vessel.

2.15 LINEAR COMPRESS OR VACUUM PUMP – A nontank type compressor or vacuum pump that employs a diaphragm pump actuated by a moving member located between two coil assemblies rather than a standard motor operated piston, for example, style pump.

2.16 LINE-VOLTAGE CIRCUIT – A circuit involving a potential of not more than 600 V and having circuit characteristics in excess of those of a low-voltage circuit.

2.17 LOWER FLAMMABLE LIMIT (LFL) – The minimum concentration of a gas in air that, if ignited, will propagate flame throughout the gas-air mixture independently of continued application of the source of ignition; expressed as a percent by volume of gas in air.

AVA Documents
Document Sharing Hub
Full document details: UL 1450 2021

2.18 LOW-VOLTAGE CIRCUIT – A circuit involving a peak open-circuit potential of not more than 42.4 V supplied by a primary battery, by a Class 2 transformer, or by a combination of a transformer and a fixed impedance that as a unit, complies with all performance requirements for a Class 2 transformer. A circuit derived from a line-voltage circuit by connecting a resistance in series with the supply circuit, as a means of limiting the voltage and current, is not considered to be a low-voltage circuit.

2.18.1 LOW-VOLTAGE, LIMITED-ENERGY CIRCUIT – A circuit involving a potential of not more than 42.4 volts peak or 60 V dc with limited energy as described in Low Voltage Limited Energy Circuits, Section 27B.

2.19 OCCASIONAL OUTDOOR-USE PRODUCT – A product that is able to be used outdoors and be stored within a garage. These products are not intended to be exposed to rain and are marked in accordance with 65.13.

2.20 OUTDOOR-USE PRODUCT – A product that is intended for use in locations exposed to weather including partially protected locations under canopies, roofed open porches, barns, and similar locations that may be damp or wet.

2.20.1 PORTABLE PRODUCT – A product that is easily carried or moved from one place to another in normal use.

2.21 REMOTELY CONTROLLED PRODUCT – A product that is out of sight of the operator who is at the starting device.

3 Components

3.1 Except as indicated in 3.2, a component of a product covered by this standard shall comply with the requirements for that component. See Appendix A for a list of standards covering components generally used in the products covered by this standard.

3.2 A component is not required to comply with a specific requirement that:

a) Involves a feature or characteristic not required in the application of the component in the product covered by this standard, or

b) Is superseded by a requirement in this standard.

3.3 A component shall be used in accordance with its rating established for the intended conditions of use.

3.4 Specific components are recognized as being incomplete in construction features or restricted in performance capabilities. Such components are intended for use only under limited conditions, such as certain temperatures not exceeding specified limits and shall be used only under those specific conditions for which they have been recognized.

4 Units of Measurement

4.1 Values stated without parentheses are the requirement. Values in parentheses are explanatory or approximate information.

5 References

5.1 Any undated reference to a code or standard appearing in the requirements of this standard shall be interpreted as referring to the latest edition of that code or standard.

AVA Documents
Document Sharing Hub
Full document details: UL 1450 2021

6 Attachments

6.1 *Deleted November 1, 2013*

7 Instructions Provided with the Product

7.1 A copy of the operating, user-maintenance, and other instructions intended to accompany a product as produced shall be used as a guide in the examination and test of the product. For this purpose, a final printed copy is not required.

7.2 The instructions shall include such directions and information as deemed by the organization responsible for the product to be necessary to cover the operation, intended use, and maintenance of the product, and shall comply with the requirements for instruction manuals in Sections 66 – 70.

7.3 A tank-type compressor that does not employ a pressure vessel marked with the code "U" or "UM" of the American Society of Mechanical Engineers (ASME) shall comply with the requirements in 66.7.

CONSTRUCTION

8 General

8.1 A product shall employ materials found by investigation to be acceptable for the intended application.

8.2 An air compressor categorized as household use only in accordance with 2.12 shall not be rated more than 3 hp (2.25 kW output) or more than 150 psi (1034 kPa) and shall comply with 66.7.

8.3 A motor-operated air compressor intended for use with sprinkler systems shall be provided with a means to be permanently connected to a wiring system.

8.4 A nitrogen generator that is intended to remove oxygen from air within an enclosure, such as a control panel, a means shall be provided to prevent the creation of an enriched oxygen concentration within the enclosure such as the use of a ventilation fan or external discharge port.

9 Enclosure

9.1 A product shall be formed and assembled so that it will have the strength and rigidity necessary to resist the abuses to which it is likely to be subjected, without resulting in a risk of fire, electric shock, or injury to persons due to total or partial collapse with resulting reduction of spacings, loosening or displacement of parts, or other defects.

9.2 Cast and sheet-metal portions of an enclosure shall not be thinner than the applicable values specified in Table 9.1.

Exception No. 1: An enclosure investigated and judged acceptable with respect to the factors mentioned in 9.3 and any additional requirements applicable to the product under investigation.

Exception No. 2: For blower-type inflators, a small area or surface that is curved or otherwise reinforced to provide equivalent mechanical strength is not required to comply with the specifications in the first column of thicknesses in Table 9.1.

9.3 Among the factors that shall be considered when judging the acceptability of a nonmetallic enclosure or an enclosure of magnesium are:

Documents
Document Sharing Hub
Full document details: UL 1450 2021

a) Mechanical strength,

b) Resistance to impact,

c) Moisture-absorptive properties,

d) Flammability, and

e) Resistance to distortion at temperatures to which the material may be subjected under conditions of normal or abnormal usage.

9.4 An enclosure of polymeric material shall comply with the applicable requirements for products that are not categorized as household use only as contained in the Standard for Polymeric Materials – Use in Electrical Equipment Evaluations, UL 746C.

Exception No. 1: An attended, intermittent duty portable product can be evaluated for compliance with the household use requirements of UL 746C if it is marked in accordance with 64.4.1, 64.4.2, and 66.6. A tank-type compressor with an automatic pressure-regulating control is not considered to be an attended, intermittent duty product.

Exception No. 2: A blower-type inflator intended for indoor, residential use only, may be evaluated for compliance with the household use requirements of UL 746C when the product is marked in accordance with 64.4.1 and 64.4.2, and the instruction manual complies with 66.6.

9.4.1 Enclosures of components in a Class 2, Limited Power Source (LPS), or Low Voltage Limited Energy (LVLE) circuit shall have a flammability rating of HB minimum.

9.5 An enclosure of polymeric material shall be subjected to the Resistance to Impact Test described in the Standard for Polymeric Materials – Use in Electrical Equipment Evaluations, UL 746C before and after cold conditioning at minus 35°C ±2°C (minus 31°F ±3.6°F) for 3 hours. For products marked in accordance with 65.13, the Ultraviolet Light Exposure requirements are not applicable and the cold conditioning shall be at 0°C ±2°C (32°F ±3.6°F) for 3 hours. After each test, the enclosure shall comply with 9.1.

Exception: A product marked in accordance with 65.14 is not required to be subjected to the cold conditioning.

9.6 The enclosure of a remotely or automatically controlled product shall prevent molten metal, burning insulation, flaming particles, or the like from falling on flammable materials, including the surface upon which the product is supported.

Table 9.1
Thickness of enclosure metal

Metal	Minimum thickness, in (mm)				
	At a small flat, unreinforced surface and at a surface of a shape or size to provide mechanical strength		At a surface to which a wiring system is to be connected in the field	At a relatively large unreinforced flat surface	
Die-cast metal	3/64	(1.2)	–	5/64	(2.0)
Cast malleable iron	1/16	(1.6)	–	3/32	(2.4)
Other cast metal	3/32	(2.4)	–	1/8	(3.2)

Table 9.1 Continued on Next Page

Documents
Document Sharing Hub
Full document details: UL 1450 2021

Table 9.1 Continued

Metal	Minimum thickness, in (mm)					
	At a small flat, unreinforced surface and at a surface of a shape or size to provide mechanical strength		At a surface to which a wiring system is to be connected in the field		At a relatively large unreinforced flat surface	
Uncoated sheet steel	0.026	(0.66)	0.032	(0.81)	0.026	(0.66)
Galvanized sheet steel	0.029	(0.74)	0.034	(0.86)	0.029	(0.74)
Nonferrous sheet metal	0.036	(0.91)	0.045	(1.14)	0.036	(0.91)

9.7 The requirement in 9.6 will necessitate that a switch, a relay, a solenoid, or the like be individually and completely enclosed, except for terminals, unless it can be shown that malfunction of the component would not result in a risk of fire, or there are no openings in the bottom of the product enclosure. It will also necessitate the use of a barrier of nonflammable material:

a) Under a motor unless:

1) The structural parts of the motor or of the product provide the equivalent of such a barrier;

2) The protection provided with the motor is such that no burning insulation or molten material falls to the surface that supports the product when the motor is energized under each of the following fault conditions:

i) Open main winding,

ii) Open starting winding,

iii) Starting switch short-circuited, and

iv) Capacitor of permanent-split capacitor motor short circuited – the short-circuit is to be applied before the motor is energized, and the rotor is to be locked;

3) The motor is provided with a thermal motor protector – a protective device that is sensitive to temperature and current – that will prevent the temperature of the motor windings from exceeding 125°C (257°F) under the maximum load under which the motor will run without causing the protector to cycle and from exceeding 150°C (302°F) with the rotor of the motor locked;

4) The motor complies with the requirements for impedance-protected motors in either the Standard for Overheating Protection for Motors, UL 2111, or the Standard for Impedance Protected Motors, UL 1004-2, and the temperature of the motor winding will not exceed 150°C (302°F) during the first 72 h of operation with the rotor of the motor locked; or

5) A vertically mounted motor is supplied with a metal screen on the end bell having a mesh with nominal openings not greater than 0.079 in (2 mm) between center lines and with wire diameters of not less than 0.018 in (0.45 mm) or if the motor complies with the Flammability Tests For The Bottom Of A Fire Enclosure in the Standard for Safety For Audio/video, Information And Communication Technology Equipment – Part 1: Safety Requirements, UL 62368-1.

b) Under wiring, unless the wire is marked VW-1.

9.8 The barrier mentioned in 9.7 shall be horizontal, shall be located as indicated in Figure 9.1, and shall not have an area less than that described in that illustration. Openings for drainage, ventilation, and the

AVA Documents
Document Sharing Hub
Full document details: UL 1450 2021

like may be employed in the barrier, provided such openings would not permit molten metal, burning insulation, or the like to fall on flammable material.

Figure 9.1

Location and extent of barrier

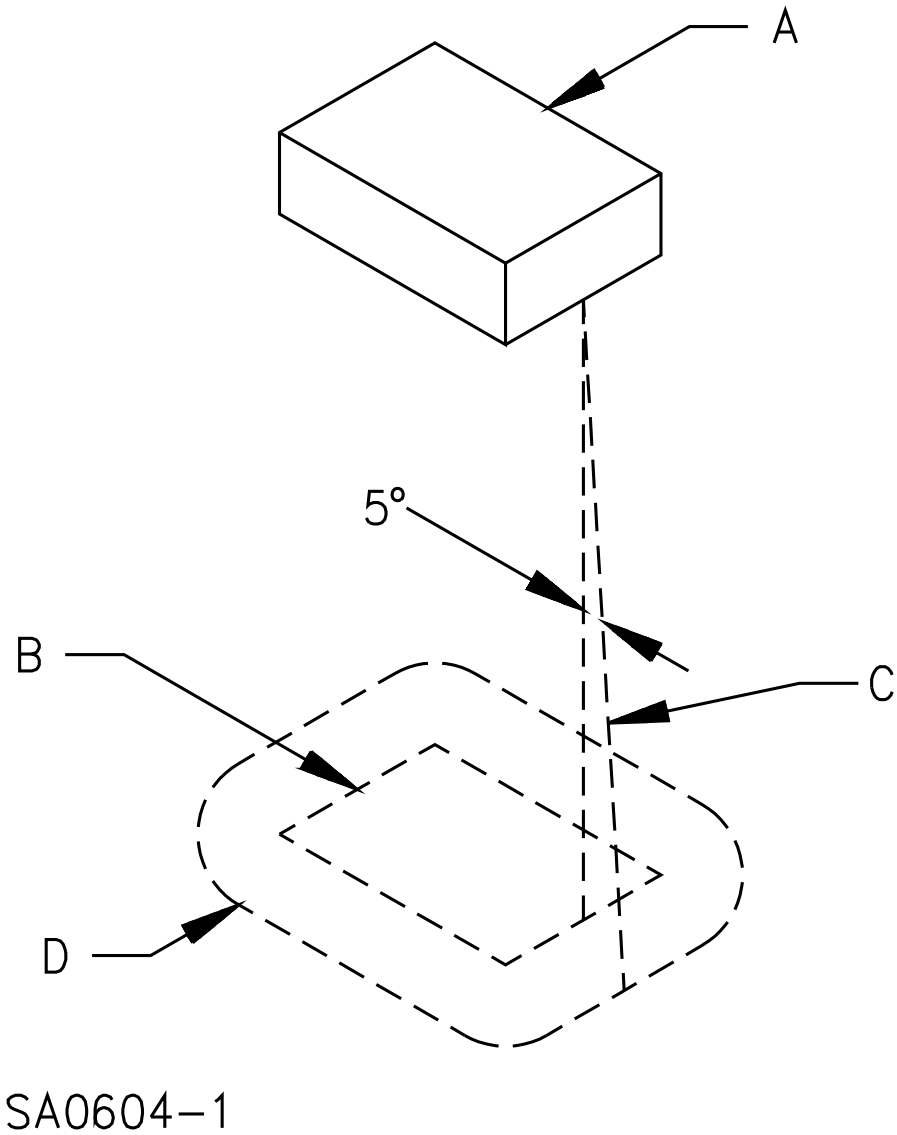

NOTES –

A – Region to be shielded by barrier. This will consist of the entire component if it is not otherwise shielded and will consist of the unshielded portion of a component that is partially shielded by the component enclosure or equivalent.

B – Projection of outline of component on horizontal plane.

C – Inclined line that traces out minimum area of barrier. The line is always

1) tangent to the component,

2) 5 degrees from the vertical, and

3) oriented so that the area traced out on a horizontal plane is maximum.

D – Location (horizontal) and minimum area for barrier. The area is that included inside the line of intersection traced out by the inclined line C and the horizontal plane of the barrier.

Documents
Document Sharing Hub
Full document details: UL 1450 2021

9.9 A paint sprayer or compressor shall be constructed so that the accumulation of paint on any uninsulated live part is unlikely when tested as described in Section 50, Paint Entry Test.

Exception No. 1: A paint sprayer having a separate compressor or pump, a hose at least 6 ft (1.83 m) long, and a maximum paint capacity of 6 fluid ounces (186 mL) need not be tested.

Exception No. 2: A compressor, including a tank-type compressor, that:

a) Is provided with a hose at least 15 ft (9.57 m) long and is marked in accordance with 64.1.11; or

b) Either cannot be carried in one hand during use, or weighs 20 lb (9.07 kg) or more and is marked in accordance with 64.1.10, need not be tested.

9.10 In determining whether a paint sprayer or compressor is capable of being carried in one hand as mentioned in Exception No. 2 to 9.9, consideration shall be given to such factors as the weight of the compressor, the number and location of handles, and the like.

9.11 A door or a cover of an enclosure that provides access to any overload-protective device that requires resetting or renewal shall be hinged or otherwise attached in an equivalent manner.

9.12 Means shall be provided for holding the door or cover over a fuseholder in a closed position, and the door or cover shall be tight-fitting.

10 Mechanical Assembly

10.1 A product shall be assembled so that it will not be adversely affected by the vibration of operation. Brush caps shall be tightly threaded or otherwise constructed to prevent loosening.

10.2 A switch other than a through-cord switch, a lampholder, an attachment-plug receptacle, a motor-attachment plug, or similar component shall be mounted securely and shall be prevented from turning. See 10.4.

Exception No. 1: A switch need not be prevented from turning if all four of the following conditions are met:

a) The switch is of a plunger or other type that does not tend to rotate when operated. A toggle switch is considered to be subject to forces that tend to turn the switch during operation of the switch;

b) The means for mounting the switch make it unlikely that operation of the switch will loosen it;

c) The spacings are not reduced below the minimum required values if the switch rotates; and

d) The operation of the switch is by mechanical means rather than by direct contact by persons.

Exception No. 2: A lampholder of the type in which the lamp cannot be replaced, such as a neon pilot or indicator light in which the lamp is sealed in a nonremovable jewel, need not be prevented from turning or shifting in position, if such motion may result in a reduction of spacings below the minimum acceptable values.

10.3 Uninsulated live parts shall be secured to the base or mounting surface so that they will be prevented from turning or shifting in position, if such motion may result in a reduction of spacings below the minimum required values.

10.4 The means for preventing the turning or shifting mentioned in 10.2 and 10.3 shall consist of more than friction between surfaces – for example, a properly applied lock washer, is acceptable as the means

Documents
Document Sharing Hub
Full document details: UL 1450 2021

for preventing a small stem-mounted switch or other device, having a single-hole mounting means, from turning.

11 Protection Against Corrosion

11.1 Iron and steel parts shall be protected against corrosion by enameling, galvanizing, plating, or other equivalent means, if corrosion of such unprotected parts would be likely to result in a risk of fire, electric shock, or injury to persons.

Exception No. 1: Surfaces of sheet-steel and cast-iron parts within an enclosure may not be required to be protected against corrosion if the oxidation of the metal due to the exposure to air and moisture is not likely to be appreciable. The thickness of metal and temperature are also to be considered.

Exception No. 2: Bearings, laminations, or minor parts of iron or steel, such as washers, screws, and the like.

11.2 If deterioration of a liquid container provided as a part of a product would result in a risk of fire or electric shock, the container shall be of a material that is resistant to corrosion by the liquid intended to be used therein.

12 Accessibility of Uninsulated Live Parts and Film-Coated Wire

12.1 To reduce the likelihood of unintentional contact that may involve a risk of electric shock from an uninsulated live part or film-coated wire, an opening in an enclosure shall comply with either (a) or (b).

a) For an opening that has a minor or dimension (see 12.5) less than 1 in (25.4 mm), such a part or wire shall not be contacted by the probe illustrated in Figure 12.1.

b) For an opening that has a minor dimension of 1 in or more, such a part or wire shall be spaced from the opening as specified in Table 12.1.

Exception: A motor other than one used in either a hand-held product or a hand-supported portion of a product need not comply with these requirements if it complies with the requirements in 12.2.

Documents
Document Sharing Hub

Full document details: UL 1450 2021

Figure 12.1

Articulate probe with web stop

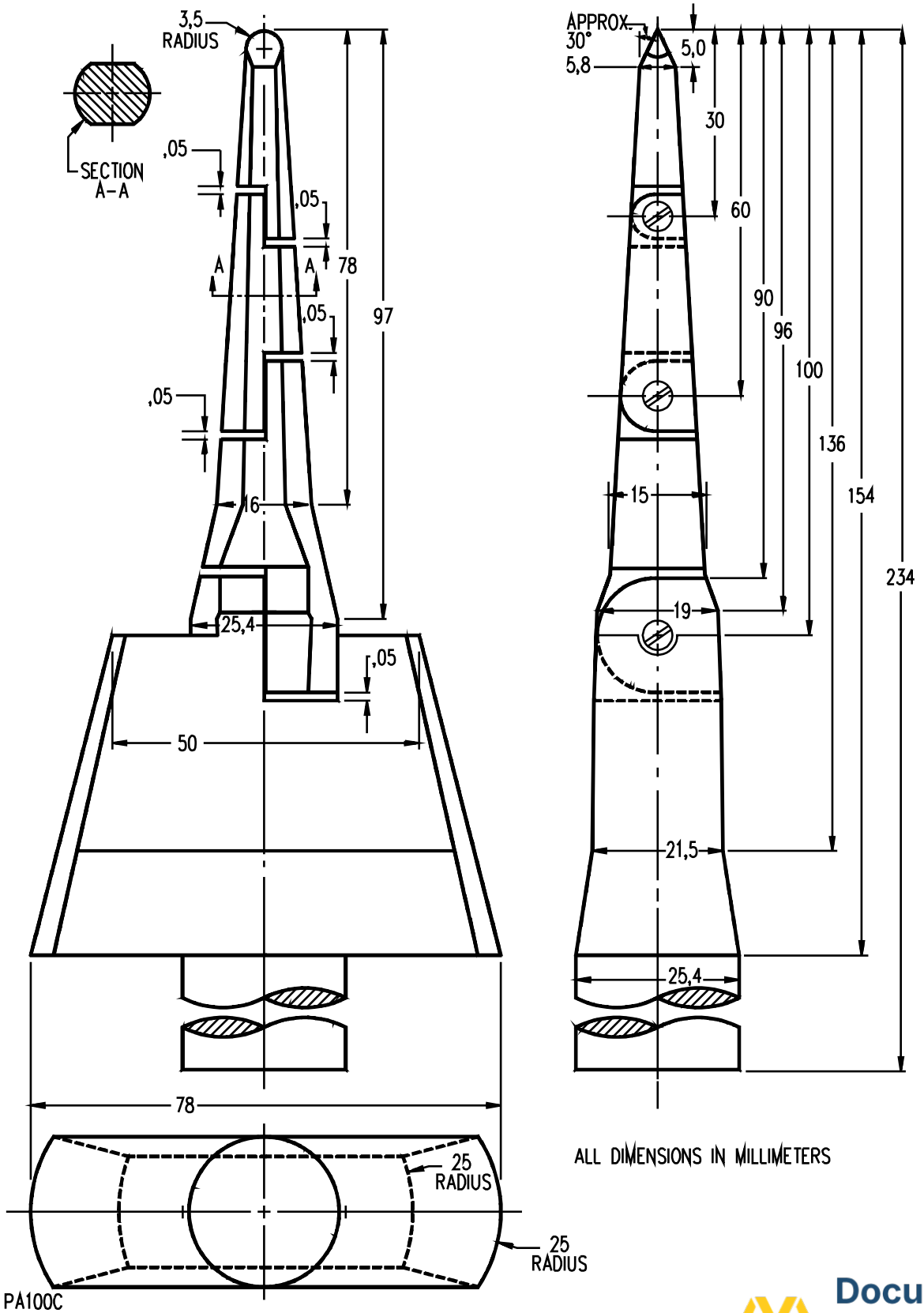

Documents
Document Sharing Hub
Full document details: UL 1450 2021

12.2 With respect to a part or wire as mentioned in 12.1 in an integral enclosure of a motor as mentioned in the Exception to 12.1:

a) An opening that has a minor dimension (see 12.5) less than 3/4 in (19.1 mm) is acceptable if:

1) Film-coated wire cannot be contacted by the probe illustrated in Figure 12.3;

2) In a directly accessible motor (see 12.6), an uninsulated live part cannot be contacted by the probe illustrated in Figure 12.4; and

3) In an indirectly accessible motor (see 12.6), an uninsulated live part cannot be contacted by the probe illustrated in Figure 12.2.

b) An opening that has a minor dimension of 3/4 in or more is acceptable if a part or wire is spaced from the opening as specified in Table 12.1.

Table 12.1
Minimum acceptable distance from an opening to a part that may involve a risk of electric shock

Minor dimension[a] of opening		Minimum distance from opening to part	
in	(mm)[b]	in	(mm)[b]
3/4[c]	(19.1)	4-1/2	(114.0)
1[c]	(25.4)	6-1/2	(165.0)
1-1/4	(31.8)	7-1/2	(190.0)
1-1/2	(38.1)	12-1/2	(318.0)
1-7/8	(47.6)	15-1/2	(394.0)
2-1/8	(54.0)	17-1/2	(444.0)
d		30	(762.0)

[a] See 12.5.
[b] Between 3/4 in and 2-1/8 in, interpolation is to be used to determine a value between values specified in the table.
[c] A dimension less than 1 in applies to a motor only.
[d] More than 2-1/8 in, but not more than 6 in (152.0 mm).

Documents
Document Sharing Hub
Full document details: UL 1450 2021

Figure 12.2

Rigid probe

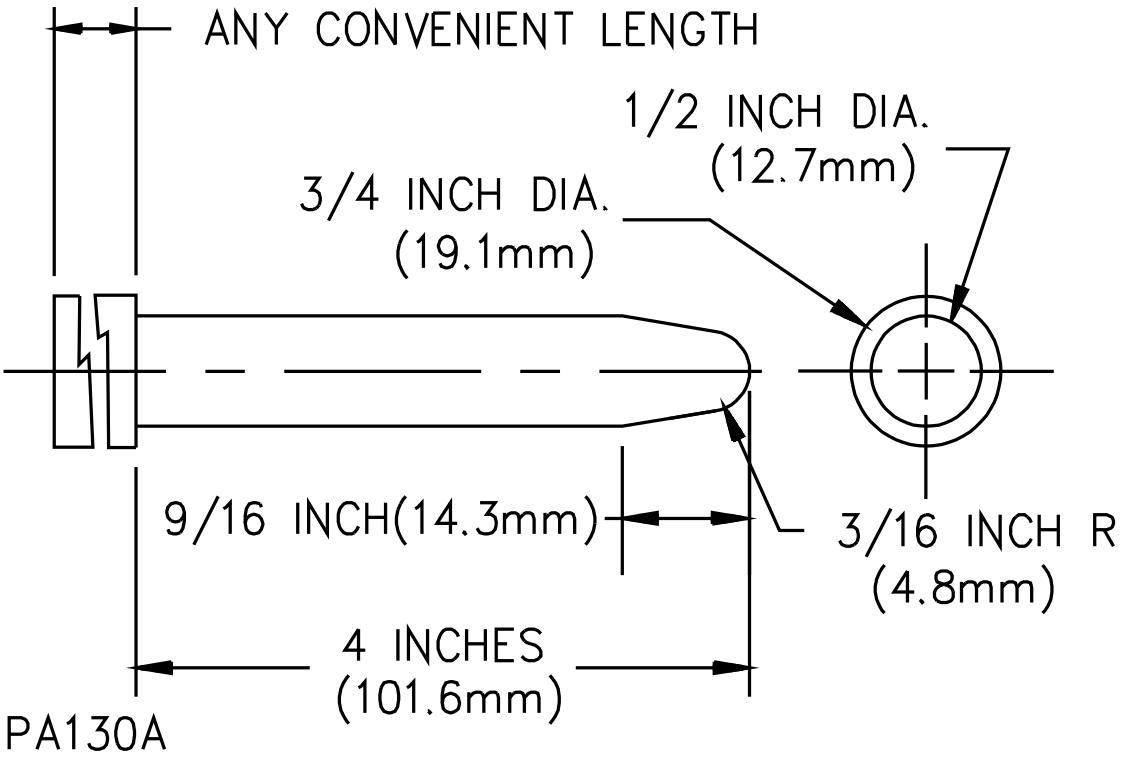

Documents
Document Sharing Hub
Full document details: UL 1450 2021

Figure 12.3

Probe for film-coated wire

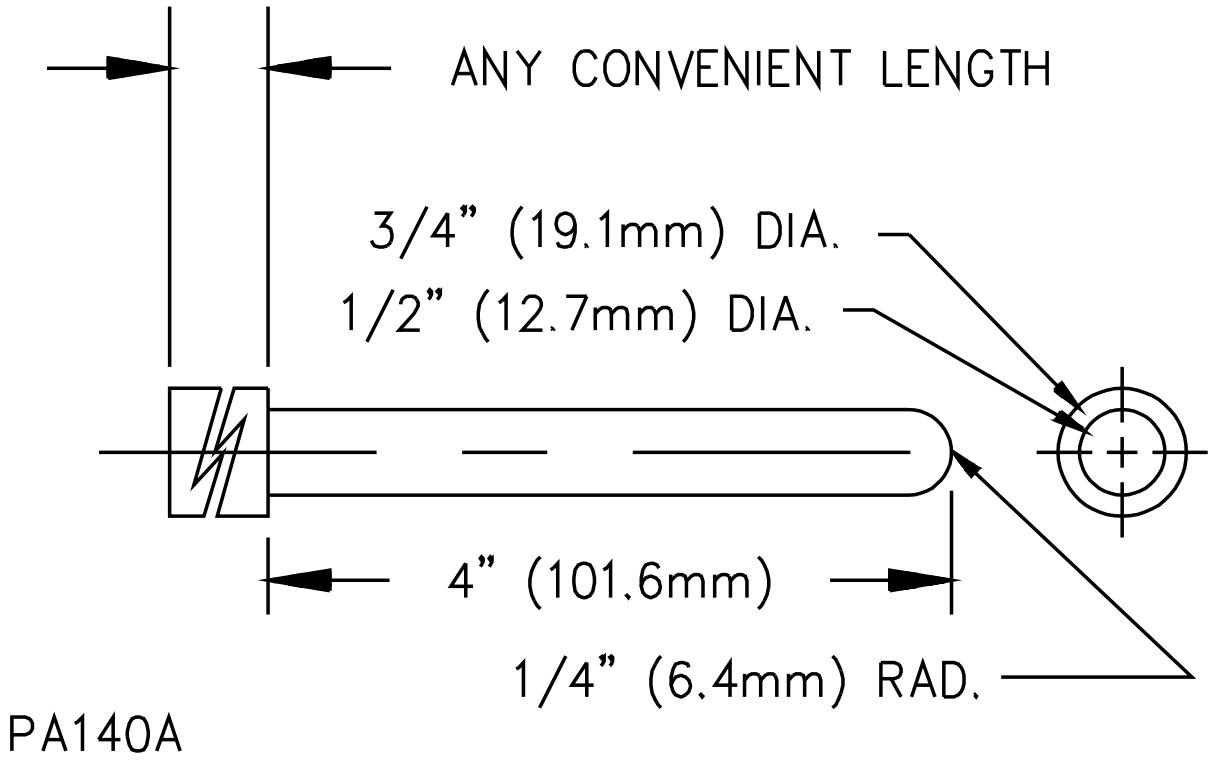

Documents
Document Sharing Hub
Full document details: UL 1450 2021

Figure 12.4

International Electrotechnical Commission (IEC) articulate accessibility probe with stop plate

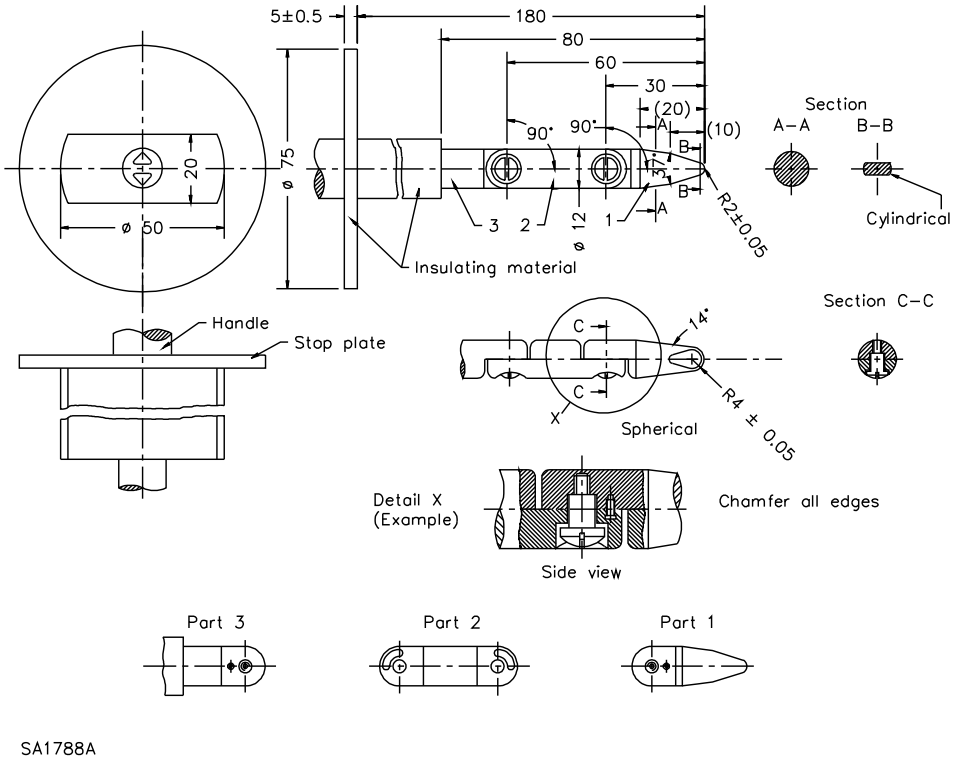

12.3 The probes mentioned in 12.1 and 12.2 and illustrated in Figure 12.1 – Figure 12.4 shall be applied to any depth that the opening will permit, and shall be rotated or angled before, during, and after insertion through the opening to any position that is necessary to examine the enclosure. The probes illustrated in Figure 12.1 and Figure 12.4 shall be applied in any possible configuration; and if necessary, the configuration shall be changed after insertion through the opening.

12.4 The probes illustrated in Figure 12.1 – Figure 12.4 shall be used as measuring instruments to judge the accessibility provided by an opening, and not as instruments to judge the strength of a material; they shall be applied with the minimum force necessary to determine accessibility.

12.5 With reference to the requirements in 12.1 and 12.2, the minor dimension of an opening is the diameter of the largest cylindrical probe having a hemispherical tip that can be inserted through the opening.

12.6 With reference to the requirements in 12.2,

a) An indirectly accessible motor is a motor:

1) That is accessible only by opening or removing a part of the outer enclosure, such as a guard or panel, that can be opened or removed without using a tool, or

2) That is located at such a height or is otherwise guarded or enclosed so that it is unlikely to be contacted.

b) A directly accessible motor is a motor:

1) That can be contacted without opening or removing any part, or

Documents
Document Sharing Hub
Full document details: UL 1450 2021

2) That is located so as to be accessible to contact.

12.7 During the examination of a product to determine whether it complies with the requirements in 12.1 or 12.2, a part of the enclosure that may be opened or removed by the user without using a tool (to attach an accessory, to make an operating adjustment, or for other reasons) is to be opened or removed.

13 Supply Connections

13.1 Cord-connected products

13.1.1 A product intended to be connected to the power-supply circuit by means of a flexible cord shall be provided with a flexible cord and an attachment plug for connection to the supply circuit.

13.1.2 The attachment plug of a product intended to be connected to a nominal 120 V circuit, and using devices required to be connected to a specific supply conductor as specified in 13.4.17, 25.2, and 26.3 shall be a polarized type. The connections to the attachment plug shall be in accordance with Figure 13.1. The polarity identification of the supply cord shall be in accordance with Table 13.1. See 67.6.

13.1.3 The flexible cord shall have a voltage rating not less than the rated voltage of the product, and shall have an ampacity that is not less than the current rating of the product.

13.1.4 Type SJ, SJT, SJO, SJOO, SJTO, or SJTOO flexible cord, or a type at least equally serviceable for the application, shall be employed for the following products.

a) A compressor (including an inflator) or paint pump having a motor rated 3 hp (2.2 kW output) or less.

b) A vacuum pump.

c) A hand-held sprayer.

d) A paint mixer and pigment dispenser.

Exception: A blower type inflator intended for indoor, residential use only, may employ any of the cord types specified above or it may employ an SPT-2 type cord.

13.1.5 A compressor or paint pump having a motor rated more than 3 hp (2.2 kW output), a tank larger than 30 gal (113.4 L), or having any marking indicating a rating of more than 3 hp, shall employ Type SO, SOO, ST, STO, or STOO flexible cord or a type at least equally serviceable for the application.

13.1.6 A cord or cord set employed on a compressor or sprayer intended for outdoor use and not marked in accordance with 65.13 shall be marked "W" or "W-A."

Documents
Document Sharing Hub

Full document details: UL 1450 2021

Figure 13.1

Connections to attachment plugs

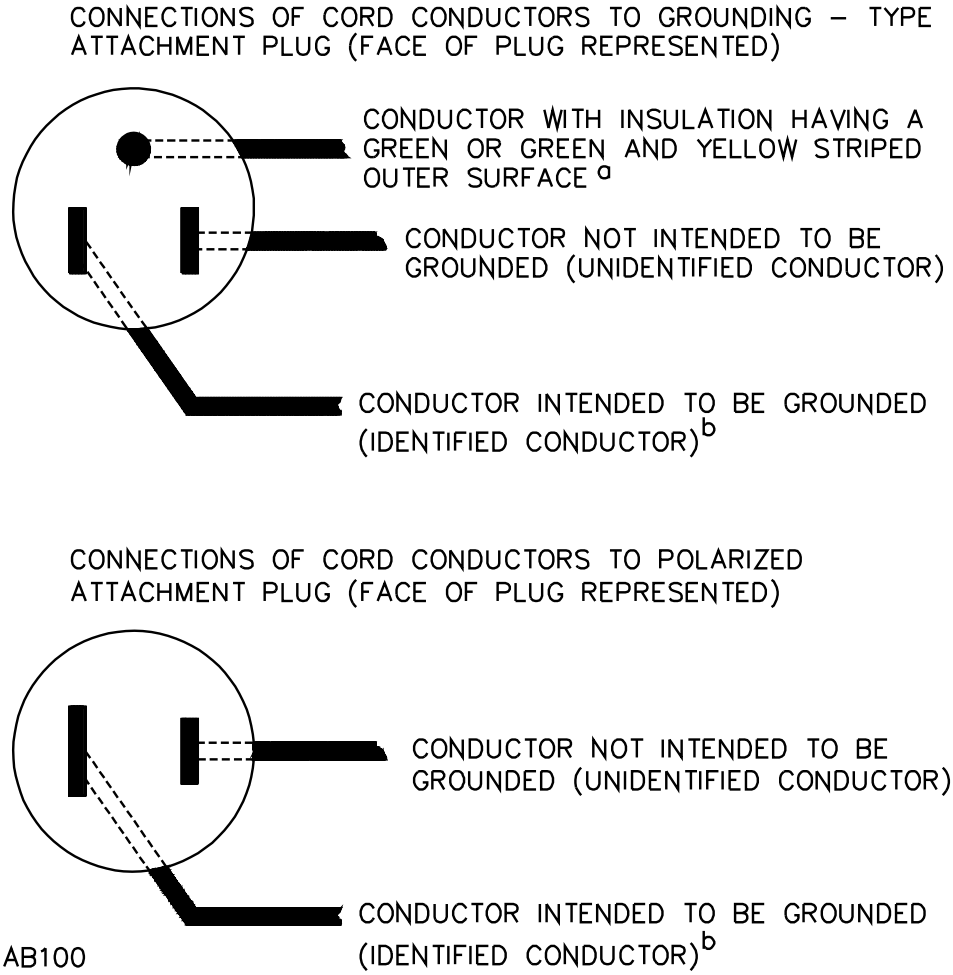

NOTES –

[a] In the above illustration, the blade to which the green conductor is connected may have a U-shape instead of a circular cross section.

[b] Signifies a conductor identified in accordance with Table 13.1.

Documents
Document Sharing Hub
Full document details: UL 1450 2021

Table 13.1
Polarity identification of flexible cords

Method of identification	Acceptable combinations	
	Wire intended to be grounded[a] wire connected to the screw shells of lampholders	**All other wires[a]**
Color of braids on individual conductors	Solid white or gray – without tracer	Solid color other than white or gray – without tracer
	Color other than white or gray, with tracer in braid	Solid color other than white or gray – without tracer
Color of insulation on individual conductors	Solid white or gray[b]	Solid color other than white or gray
	Light blue[c]	Solid color other than light blue, white, or gray
Color of separators	White or gray[d]	Color other than white or gray
Other Means	Tin or other white metal on all strands of the conductor[d]	No tin or other white metal on the strands of the conductor
	A stripe, ridge, or groove on the exterior surface of the cord[d]	

[a] A wire finished to show a green color with or without one or more yellow stripes or tracers is to be used only as an equipment-grounding conductor. See 20.2.1 and Figure 13.1.

[b] Only for cords having no braid on any individual conductor.

[c] For jacketed cords.

[d] Only for Type SPT-2 cord.

13.1.7 The flexible cord may be attached permanently to a product or may be in the form of a separate cord set with means for connection to the product.

13.1.8 An attached flexible cord provided with the product shall comply with one of the following, as applicable:

a) Stationary equipment shall be provided with an attached flexible cord at least 6 ft (1.8 m) long including the attachment plug.

b) Movable, hand-held, hand-guided, and hand-supported equipment shall be provided with an attached flexible cord at least 6 ft (1.8 m) long or 18 in (457 mm) long or less including the attachment plug.

13.1.9 With reference to 13.1.8, for all product types that are acceptable for use with an 18 in (457 mm) or less flexible cord, an acceptable extension cord shall be provided with the product, or shall be marked in accordance with 64.3.1, or the instructions shall contain statements for the selection of the correct extension cord type in accordance with 67.3.

13.1.10 If a product incorporates a disconnecting means, such as a cord connector in the supply cord between parts of the product, the arrangement shall be such that no live parts will be exposed under any normal conditions.

13.1.11 A product intended for use with a detachable cord set and a product that employs three or more pin terminals intended for use with an attachment plug that covers all the pins shall have terminals spaced so they will not accommodate a two-pin flatiron or appliance plug or a two-pin cord-connector body. An acceptable plug or connector shall be one that cannot be improperly connected to the terminals.

Documents
Document Sharing Hub
Full document details: UL 1450 2021

13.1.12 A product that is required to use a polarized attachment plug as specified in 13.1.2, and that is provided with a separate or detachable cord-set as specified in 13.1.7 and the Exception to 13.1.8 shall also use an appliance connector of the polarized type.

13.1.13 The attachment plug shall have an ampacity not less than the rated current of the product or the actual current measured during the Input Test, Section 45, whichever is greater, and a voltage rating equal to the rated voltage of the product. If a product is adaptable for use on two or more different values of voltage by field alteration of internal connections, the attachment plug provided with the product shall be acceptable for the voltage for which the product is connected when shipped from the factory.

13.1.14 The power-supply cord of a product shall exit the enclosure in an area that is not in close proximity to a hot spot or moving part, such as a compressor head, blade, belt, or rotating part.

13.2 Strain relief

13.2.1 Strain relief shall be provided so that mechanical stress on a flexible cord, flexible conduit, or armored cable will not be transmitted to terminals, splices, or interior wiring. See Section 52, Strain Relief Test.

13.2.2 Means shall be provided to prevent a flexible cord from being pushed into a product through a cord-entry hole if such displacement may subject the cord to mechanical damage or exposure to a temperature higher than that for which the cord is acceptable, or may reduce a spacing, such as to a metal strain-relief clamp, below the minimum acceptable value, or damage to the internal connections or components. Compliance is to be checked by the Push-Back Strain Relief Test, Section 53.

13.2.3 If a knot in a flexible cord serves as strain relief, a surface that the knot may contact shall be free from projections, sharp edges, burrs, fins, and the like, that may cause abrasion of the insulation on the conductors.

13.3 Bushings

13.3.1 At a point where a flexible cord passes through an opening in a wall, barrier, or enclosure, there shall be a bushing or the equivalent that shall be substantial, reliably secured in place, and shall have a smooth, well-rounded surface against which the cord may bear. The bushing or equivalent may be of metal or may be an insulating bushing that complies with the requirements in 13.3.2 – 13.3.9.

13.3.2 A cord hole in wood, porcelain, phenolic composition, or other nonconducting material and having a smooth, rounded surface is considered to be equivalent to a bushing.

13.3.3 Ceramic materials and some molded compositions are generally acceptable for insulating bushings.

13.3.4 A separate bushing shall not be made of wood or of hot-molded shellac-and-tar compositions.

13.3.5 A vulcanized fiber bushing shall not be less than 3/64 in (1.2 mm) thick and so formed and secured in place that it will not be adversely affected by conditions of ordinary moisture.

13.3.6 A separate soft-rubber, neoprene or polyvinyl chloride bushing may be employed in the frame of a motor or in the enclosure of a capacitor attached to a motor provided that the bushing is:

a) Not less than 3/64 in (1.2 mm) thick, and

b) Located so that it will not be exposed to oil, grease, oily vapor, or other substances having a deleterious effect on the compound employed.

AVA Documents
Document Sharing Hub
Full document details: UL 1450 2021

13.3.7 A bushing of any of the materials specified in 13.3.6 may be employed at any point in a product if used in conjunction with a type of cord for which an insulating bushing is not required. If a bushing of one of these materials is used anywhere in the product, the edges of the hole in which the bushing is mounted are to be smooth and free from burrs, fins, and the like.

13.3.8 At any point in a product, a bushing of the same material as, and molded integrally with, the supply cord is acceptable if the built-up section is not less than 1/16 in (1.6 mm) thick at the point where the cord passes through the enclosure.

13.3.9 An insulated metal grommet may be acceptable instead of an insulating bushing if the insulating material used is not less than 1/32 in (0.8 mm) thick and completely fills the space between the grommet and the metal in which it is mounted.

13.4 Permanently connected products

13.4.1 A permanently connected product shall have provision for connection to a wiring system.

13.4.2 A terminal box or compartment in which power-supply connections to a permanently connected product are to be made shall be located so that the connections may be inspected after the product is installed as intended.

13.4.3 A terminal compartment intended for connection of a supply raceway shall be attached to the product so as to be prevented from turning.

13.4.4 If it is intended that supply connections be made directly to a motor, the terminal compartment on the motor shall comply with the requirements for terminal compartments in the Standard for Rotating Electrical Machines – General Requirements, UL 1004-1.

13.4.5 A permanently connected product shall be provided with wiring terminals for the connection of conductors having an ampacity acceptable for the product; or the product shall be provided with leads for such connection.

13.4.6 A field-wiring terminal is considered to be a terminal to which a wire may be connected in the field, unless the wire; and a means of making the connection – a pressure terminal connector, soldering lug, soldered loop, crimped eyelet, or the like – factory-assembled to the wire, are provided as a part of the product.

13.4.7 Wiring terminals for the supply conductors – excluding the grounding conductor – shall be provided with a pressure wire connector securely fastened in place – for example, firmly bolted or held by a screw.

Exception No. 1: A soldering lug may be used.

Exception No. 2: A wire binding screw may be employed at a wiring terminal intended to accommodate a 10 AWG (5.3 mm^2) or smaller conductor if upturned lugs or the equivalent are provided to hold the wire in place.

13.4.8 A wiring terminal shall be prevented from turning.

13.4.9 The free length of a lead inside an outlet box or wiring compartment shall be 6 in (150 mm) or more if the lead is intended for field connection to an external circuit.

Documents
Document Sharing Hub
Full document details: UL 1450 2021

Exception: The lead may be less than 6 in long if it is evident that the use of a longer lead might result in a risk of fire or electric shock.

13.4.10 A wire-binding screw at a wiring terminal shall not be smaller than No. 10.

Exception No. 1: A No. 8 screw may be used at a terminal intended only for the connection of a 14 AWG (2.1 mm^2) conductor.

Exception No. 2: A No. 6 screw may be used for the connection of a 16 or 18 AWG (1.3 or 0.82 mm^2) conductor. See 13.4.16.

13.4.11 According to the National Electrical Code, ANSI/NFPA 70, 14 AWG (2.1 mm^2) is the smallest conductor that may be used for branch-circuit wiring, and therefore is the smallest conductor that may be anticipated at a terminal for connection of a power-supply wire.

13.4.12 A wire-binding screw shall thread into metal.

13.4.13 A terminal plate tapped for a wire-binding screw shall be of metal not less than 0.050 in (1.27 mm) thick and, except as indicated in 13.4.14, shall not have less than two full threads in the metal.

13.4.14 Two full threads are not required if fewer threads result in a secure connection in which the threads will not strip upon the application of a 20 lbf-in (2.26 N·m) tightening torque.

13.4.15 A terminal plate formed from stock having the thickness specified in 13.4.13 may have the metal extruded at the tapped hole to provide two full threads for the binding screw.

13.4.16 Upturned lugs or a cupped washer shall be capable of retaining a supply conductor of the size specified in 13.4.5 under the head of the screw or washer.

13.4.17 A permanently connected product rated 125 V or less, or 125/250 V (3-wire) or less, and employing a lampholder of the Edison-screw-shell type, or a single-pole switch or overcurrent-protective device other than an automatic control without a marked off position, shall have one terminal or lead identified for the connection of the grounded conductor of the supply circuit. The terminal or lead to be connected to the grounded supply conductor shall be the one that is electrically connected to screw shells of lampholders and to which no switch or overcurrent-protective device of the single-pole type other than an automatic control without a marked off position is connected.

13.4.18 A terminal intended for the connection of a grounded supply conductor shall be of or plated with metal that is substantially white in color and shall be readily distinguishable from the other terminals; or proper identification of that terminal shall be clearly shown in some other manner, such as on an attached wiring diagram.

14 Current-Carrying Parts

14.1 A current-carrying part shall be of silver, copper, a copper alloy, or other similar metal.

14.2 Ordinary iron or steel shall not be used as a current-carrying part.

Exception: Ordinary iron or steel provided with a corrosion-resistant coating, may be used for a current-carrying part:

a) If acceptable in accordance with 3.1, or

b) Within a motor or associated governor.

Documents
Document Sharing Hub
Full document details: UL 1450 2021

14.3 The restriction in 14.2 does not apply to stainless steel.

15 Insulating Material

15.1 Material for mounting an uninsulated live part shall be porcelain, phenolic composition, or other equivalent material.

15.2 Ordinary vulcanized fiber may be used for insulating bushings, washers, separators, and barriers, but not as the sole support for uninsulated live parts where shrinkage, current leakage, or warpage may introduce a risk of fire or electric shock.

15.3 A thermoplastic material generally is not considered acceptable for the sole support of uninsulated live parts, but may be employed if found to have mechanical strength and rigidity, resistance to heat, resistance to flame propagation, dielectric voltage withstand, and other properties acceptable for the application.

15.4 Small molded parts, such as a brush cap, shall be constructed to have the necessary mechanical strength and rigidity to withstand the stresses of actual service. Brush caps shall be secured or located so that they are protected from mechanical damage that might result during use.

16 Gaskets and Seals

16.1 Gaskets and seals relied upon to reduce the risk of electric shock or injury to persons shall comply with the Standard for Gaskets and Seals, UL 157.

Exception: Rubber or neoprene compounds relied upon for protection from rain are only required to comply with Accelerated Aging Test, Section 55.

17 Internal Wiring

17.1 Mechanical protection

17.1.1 Wiring and connections between parts of a product shall be protected or enclosed.

Exception: A length of flexible cord may be employed for external connections if flexibility is essential. Guarding or protection may be required to reduce the likelihood of damage or stress to the cord. See 17.1.2.

17.1.2 Insulated wiring is considered to be protected as required in 17.1.1 if, when judged as though it were film-coated wire, it would be acceptable in accordance with 13.1.3 – 13.1.13. Internal wiring not so protected may be acceptable if it is secured within the enclosure so that it is unlikely to be subjected to stress or mechanical damage.

17.1.3 Wires within an enclosure, a compartment, a raceway, or the like shall be routed or otherwise protected so that damage to conductor insulation cannot result from contact with any rough, sharp, or moving part.

17.1.4 If wiring or flexible cord between parts of a product is located so that it may be in proximity to flammable material or may be subjected to mechanical damage, it shall be enclosed in armored cable, rigid metal conduit, electrical metallic tubing, or enclosed metal raceway, or shall be otherwise equivalently protected.

Documents
Document Sharing Hub
Full document details: UL 1450 2021

17.1.5 A hole through which insulated wires pass in a sheet-metal wall within the overall enclosure shall be provided with a smooth, rounded bushing or shall have smooth, rounded surfaces upon which wires may bear, to prevent abrasion of the insulation. A flexible cord used for external interconnection as mentioned in 17.1.1 shall be provided with strain relief and bushings in accordance with 13.2.2 – 13.3.9 unless the construction is such that the cord will be protected from stress or motion. If Type SP-1, SPT-1, SP-2, SPT-2, or other cord lighter than Type SV is employed, and if the wall or barrier is of metal, and is such that the cord may be subjected to stress or motion, an insulating bushing shall be provided.

17.1.6 A flexible cord used for external connections shall be as serviceable as the power-supply cord and shall be so located as to reduce the likelihood of damage or stress.

17.1.7 Insulated wires may be bunched and passed through a single opening in a metal wall within the enclosure of a product.

17.2 Types of wire

17.2.1 Internal wiring shall consist of wires of a type or types that are acceptable for the application, when considered with respect to the temperature and voltage to which the wiring is likely to be subjected and with respect to its exposure to oil, grease, or other conditions of service to which it is likely to be subjected.

17.2.2 Thermoplastic-insulated wire employed for internal wiring shall be standard building wire or appliance-wiring material acceptable for the purpose.

17.3 Splices and connections

17.3.1 Each splice and connection shall be mechanically secure and shall provide reliable electrical contact. A soldered connection shall be mechanically secured before being soldered if breaking or loosening of the connection may result in a risk of fire or electric shock.

17.3.2 The requirement in 17.3.1 will necessitate the use of a lock washer or other equivalent means to prevent a wire-binding screw or a nut from becoming loosened.

17.3.3 A splice shall be provided with insulation equivalent to that of the wires involved if permanence of spacing between the splice and other metal parts may not be maintained.

17.3.4 Aluminum conductors, insulated or uninsulated, used as internal wiring, such as for internal connection between current-carrying parts or as motor windings, shall be terminated by a method acceptable for the combination of metals involved at the point of connection.

17.3.5 With reference to the requirements in 17.3.4, a wire-binding screw or a pressure wire connector used as a terminating device shall be acceptable for use with aluminum under the conditions involved – for example, temperature, heat cycling, vibration, and the like.

17.3.6 Insulation consisting of two layers of friction tape, two layers of thermoplastic tape, or of one layer of friction tape on top of one layer of rubber tape, is acceptable on a splice if the voltage involved is less than 250 V. In determining if splice insulation consisting of coated-fabric, thermoplastic or other type of tubing is acceptable, consideration is to be given to such factors as its dielectric properties, heat-resistant and moisture-resistant characteristics, and the like. Thermoplastic tape wrapped over a sharp edge is not acceptable.

17.3.7 If stranded internal wire is connected to a wire-binding screw, loose strands of wire shall be positively prevented from contacting an uninsulated live part that is not always of the same polarity as the wire and from contacting a dead metal part. This may be accomplished by use of a pressure terminal

AVA Documents
Document Sharing Hub

Full document details: UL 1450 2021

connector, soldering lug, or crimped eyelet, by soldering all strands of the wire together, or by other equivalent means.

17.3.8 A nominal 0.110-in, 0.125-in, 0.187-in, 0.205-in, or 0.250-in wide quick-connect terminal shall comply with the requirements for quick-connect terminals, UL 310. Other sizes shall be investigated with respect to crimp pullout, engagement-disengagement forces of the connector and tab, and temperature rises, all tests to be conducted in accordance with the requirements for quick-connect terminals, UL 310.

18 Separation of Circuits

18.1 Conductors of circuits operating at different potentials shall be reliably separated from each other unless they are each provided with insulation acceptable for the highest potential involved.

18.2 An insulated conductor shall be reliably retained so that it cannot contact an uninsulated live part of a circuit operating at a different potential.

18.3 In a compartment that is intended for the field installation of conductors, and that contains provision for connection of Class 2 or Class 3 circuit conductors, and Class 1, power, or lighting circuit conductors, as defined in the National Electrical Code, ANSI/NFPA 70, a barrier shall be provided to separate the conductors of the different circuits, or the arrangement of the compartment shall be such that a minimum spacing of 1/4 in (6.4 mm) can be maintained between the conductors of the different circuits including the conductors to be field installed.

19 Capacitors

19.1 A capacitor provided as a part of a capacitor motor and a capacitor connected across the line, such as a capacitor for radio-interference elimination or power-factor correction, shall be housed within an enclosure or container that will protect the plates against mechanical damage and that will prevent the emission of flame or molten material resulting from malfunction or breakdown of the capacitor. The container shall be of metal providing strength and protection not less than that of uncoated steel having a thickness of 0.020 in (0.51 mm). Sheet metal having a thickness less than 0.026 in (0.66 mm) is not recommended.

Exception: The individual container of a capacitor may be of sheet metal less than 0.020 in thick or may be of material other than metal if the capacitor is mounted in an enclosure that houses other parts of the product and provided that such housing is acceptable for the enclosure of live parts.

19.2 If a capacitor that is not a part of a capacitor motor or a capacitor-start motor is connected in a product that is intended to be automatically or remotely controlled so that malfunction or breakdown of the capacitor could result in a risk of fire, electric shock, or injury to persons, thermal or overcurrent protection shall be provided in the product to prevent such a condition.

19.3 A capacitor connected from one side of the line to the enclosure of a product shall have a capacitance rating of not more than 0.10 μF. See 46.1.1.

19.4 If a product employs a combination consisting of a rectifier and an electrolytic capacitor, no risk of fire, electric shock, or injury to persons shall result when either the rectifier or the capacitor is short-circuited.

19.5 Under both normal and abnormal conditions of use, a capacitor employing a liquid dielectric medium more flammable than askarel shall not expel the dielectric medium when tested in accordance with the applicable performance requirements in this standard.

Documents
Document Sharing Hub
Full document details: UL 1450 2021