UL 1610

STANDARD FOR SAFETY

Central-Station Burglar-Alarm Units

Documents
Document Sharing Hub

Full document details: UL 1610 2021

Documents
Document Sharing Hub

Full document details: UL 1610 2021

UL Standard for Safety for Central-Station Burglar-Alarm Units, UL 1610

Fourth Edition, Dated July 5, 2016

Summary of Topics

This revision of UL 1610 dated April 21, 2021 is issued to remove the ANSI designation from the standard.

Text that has been changed in any manner or impacted by UL's electronic publishing system is marked with a vertical line in the margin.

All rights reserved. No part of this publication may be reproduced, stored in a retrieval system, or transmitted in any form by any means, electronic, mechanical photocopying, recording, or otherwise without prior permission of UL.

UL provides this Standard "as is" without warranty of any kind, either expressed or implied, including but not limited to, the implied warranties of merchantability or fitness for any purpose.

In no event will UL be liable for any special, incidental, consequential, indirect or similar damages, including loss of profits, lost savings, loss of data, or any other damages arising out of the use of or the inability to use this Standard, even if UL or an authorized UL representative has been advised of the possibility of such damage. In no event shall UL's liability for any damage ever exceed the price paid for this Standard, regardless of the form of the claim.

Users of the electronic versions of UL's Standards for Safety agree to defend, indemnify, and hold UL harmless from and against any loss, expense, liability, damage, claim, or judgment (including reasonable attorney's fees) resulting from any error or deviation introduced while purchaser is storing an electronic Standard on the purchaser's computer system.

Documents
Document Sharing Hub

Full document details: UL 1610 2021

No Text on This Page

Documents
Document Sharing Hub

Full document details: UL 1610 2021

JULY 5, 2016
(Title Page Reprinted: April 21, 2021)

1

UL 1610

Standard for Central-Station Burglar-Alarm Units

First Edition – January, 1985
Second Edition – May, 1994
Third Edition – October, 1998

Fourth Edition

July 5, 2016

This UL Standard for Safety consists of the Fourth Edition including revisions through April 21, 2021.

Comments or proposals for revisions on any part of the Standard may be submitted to UL at any time. Proposals should be submitted via a Proposal Request in UL's On-Line Collaborative Standards Development System (CSDS) at https://csds.ul.com.

UL's Standards for Safety are copyrighted by UL. Neither a printed nor electronic copy of a Standard should be altered in any way. All of UL's Standards and all copyrights, ownerships, and rights regarding those Standards shall remain the sole and exclusive property of UL.

COPYRIGHT © 2021 UNDERWRITERS LABORATORIES INC.

Documents
Document Sharing Hub

Full document details: UL 1610 2021

No Text on This Page

Documents
Document Sharing Hub

Full document details: UL 1610 2021

CONTENTS

INTRODUCTION

1 Scope 9
2 General 9
2.1 Components 9
2.2 Units of measurement 10
2.3 Undated references 10
2.4 Terminology 10
3 Glossary 10
4 Installation and Operating Instructions 13
5 Installation and Operating Instructions Physical Media 14
6 Electric Shock 14

CONSTRUCTION

ASSEMBLY

7 General 15
7.1 Product assembly 15
7.2 Electrical protection 15
8 Protection of Service Personnel 20
9 Enclosures 20
9.1 General 20
9.2 Doors and covers 22
9.3 Enclosure openings 22
9.4 Screens and expanded metal 23
9.5 Cast metal 24
9.6 Sheet metal 24
9.7 Product enclosure mounting 27
9.8 Polymeric materials 27
10 Corrosion Protection 27

FIELD IRING CONNECTIONS

11 General 28
12 Cord-Connected Products 28
13 Permanently-Connected Products 29
13.1 General 29
13.2 Field-wiring terminals 29
13.3 Field wiring leads 31
13.4 Polarity identification 32
14 Grounding 32

INTERNAL WIRING

15 General 33
16 Wiring Methods 34
17 Separation of Circuits 35
18 Bonding for Grounding 35

COMPONENTS, ELECTRICAL

Documents
Document Sharing Hub
Full document details: UL 1610 2021

19 General 38
19.1 Mounting of components 38
19.2 Insulating materials 39
19.3 Fuseholder 40
19.4 Current-carrying parts 40
20 Overcurrent Protection 40
21 Semiconductors 40
22 Switches 40
23 Transformers and Coils 40

SPACINGS

24 General 41
25 Components 43

PERFORMANCE – ALL UNITS

26 General 43
26.1 Test units and data 43
26.2 Test samples and miscellaneous data 43
26.3 Test voltages 44
26.4 FCC requirements 44
27 Normal Operation Test 44
28 Incorrect Connection Tests 44
29 Input Test 45
30 Output Measurement Test 45
31 Electrical Supervision Test 45
32 Undervoltage Operation Test 46
33 Overvoltage Operation Test 46
34 Variable Ambient Test 46
35 Humidity Test 47
36 Leakage Current Tests for Cord-Connected Products 47
37 Electric Shock Current Test 50
38 Overload Test 54
38.1 General 54
38.2 Separately energized circuits 54
39 Endurance Test 55
39.1 General 55
39.2 Separately energized circuits 55
40 Jarring Test 55
41 Dielectric Voltage-Withstand Test 56
42 Temperature Test 57
43 Abnormal Operation Test 60
44 Electrical Transient Tests 60
44.1 General 60
44.2 Supply line transients 61
44.3 Internally induced transients 63
44.4 Input/output circuit transients 63
45 AC Induction Test 64
46 Polymeric Materials Test 65
47 Battery Replacement Test 65
48 Drop Test 65
49 Strain Relief Test 65
49.1 Supply cord 65
49.2 Field-wiring leads 66

AVA Documents
Document Sharing Hub
Full document details: UL 1610 2021

50 Ignition Through Bottom-Panel Opening Tests 66
50.1 General 66
50.2 Hot, flaming oil 66
50.3 Molten PVC and copper 67
51 Mechanical Strength Tests for Enclosures 67
52 Special Terminal Assemblies Tests 68
52.1 General 68
52.2 Disconnection and reconnection 68
52.3 Flexing test 68
52.4 Millivolt drop test 68
52.5 Temperature test 69

INTRUSION DETECTION DEVICES

53 General 69

CONTROL UNITS

54 General 69

DIRECT-WIRE SYSTEMS

55 General 69
56 Alarm Receiving Units 70
57 Subscriber Units 70

TRANSMITTER SYSTEMS

58 General 70
59 Dual Signal Line Transmission Methods 71
60 Single Signal Line Transmission Methods 73
61 Central-Station Units 74
62 Subscriber Control Units 74

COMBINATION SYSTEMS

63 General 75

MULTIPLEX SYSTEMS

64 General 75
65 Operation 75
66 Packet Switched Data Networks 78
67 Central-Station Units 79
68 Subscriber Control Units 80
69 Remotely Accessible Control Units 80
69.1 General 80
69.2 Validation of remote access credential 80
69.3 Communication 81
69.4 Communications data integrity standards 82
69.5 Software/Firmware upgrade 83
69.6 Data integrity standards 83
69.7 Software/Firmware deployment process 84
69.8 Event log 84

AVA Documents
Document Sharing Hub
Full document details: UL 1610 2021

70 Automated System Units....85
71 Satellite Stations....85
72 Private Radio Facilities....86

ACKNOWLEDGMENT SIGNAL

73 General....86
74 Attack Tests....87
75 Compromise Test....87
76 Encrypted Line Security Equipment....89

POWER SUPPLIES

GENERAL

77 Common Requirements....89

RECHARGEABLE (SECONDARY) BATTERIES

78 General....90

NONRECHARGEABLE (PRIMARY) BATTERIES

79 General....91

PERFORMANCE

80 Power Failure....91

SHORT RANGE RADIO FREQUENCY (RF) DEVICES

81 General....93
82 Time to Report Alarm....93
83 Inoperative Transmitter Reporting....94
84 Battery Status Indication....94
85 Tamper Protection....95
86 Interference Protection....95
87 Reference Level Determination....95
87.1 Method 1....95
87.2 Method 2....97
88 Interference Immunity....100
89 Frequency Selectivity....101
90 Clash....102
91 Clash Error....102
92 Error (Falsing) Rate....103
93 Throughput Rate....104
94 Transmitter Stability Test....105
95 Transmitter Accelerated Aging Test....105
96 Installation Instructions and User Manual....105

MANUFACTURING AND PRODUCTION-LINE TESTS FOR HIGH-VOLTAGE PRODUCTS

97 General....106
98 Production-Line Dielectric Voltage-Withstand Test....106

AVA Documents
Document Sharing Hub
Full document details: UL 1610 2021

99 Production-Line Grounding Continuity Test 107

MARKING

100 General 107
101 Marking Permanency Tests 109

ACCESSORY EQUIPMENT

102 General 110
103 Construction 110
104 Performance (Installation) Test 110
105 Marking 110

APPENDIX A

Standards for Components 112

APPENDIX B

B1 User Validation (Remote Devices) 113

Documents
Document Sharing Hub
Full document details: UL 1610 2021

No Text on This Page

Documents
Document Sharing Hub

Full document details: UL 1610 2021

INTRODUCTION

1 Scope

1.1 These requirements cover components of central-station burglar-alarm systems intended and specifically designated for burglary-protection use at mercantile and banking premises, on mercantile safes, and on bank safes and vaults.

1.2 The components covered by these requirements are intended for use in a burglar-alarm system in which the operations of electrical protection circuits and devices are transmitted automatically to, recorded in, maintained from, and supervised from a central-station that employs trained operators and alarm investigators who are in attendance at all times.

1.3 These requirements serve as the basis of classification of central-station burglar-alarm system transmission methods. The systems may be classified as either standard line security equipment or encrypted line security equipment by virtue of the construction and performance requirements for components of that system. However, requirements covering the complete systems are contained in the Standard for Central-Station Alarm Services, UL 827.

1.4 Protective devices installed on individual properties are further classified as to extent of protection at each location, according to the requirements covering installation and classification (of extent) of alarm protective equipment at individual locations as published in the Standard for Installation and Classification of Burglar and Holdup Alarm Systems, UL 681.

1.5 If equipment covered by these requirements is intended for use in a combination burglar-alarm and fire-protective signaling system, the portion of the equipment serving a fire-alarm function is covered by the Standard for Control Units and Accessories for Fire Alarm Systems, UL 864.

1.6 Systems covered by these requirements operate using Class 2 remote-control and signaling circuits as defined by Article 725 of the National Electrical Code, NFPA 70.

1.7 The requirements assume that standard telephone operating practices are acceptable for leased or other lines connecting to a central-station as defined by Article 800 of the National Electrical Code, NFPA 70.

2 General

2.1 Components

2.1.1 Except as indicated in 2.1.2, a component of a product covered by this standard shall comply with the requirements for that component. See Appendix A for a list of standards covering components used in the products covered by this standard.

2.1.2 A component is not required to comply with a specific requirement that:

a) Involves a feature or characteristic not required in the application of the component in the product covered by this standard, or

b) Is superseded by a requirement in this standard.

2.1.3 A component shall be used in accordance with its rating established for the intended conditions of use.

Documents
Document Sharing Hub

Full document details: UL 1610 2021

2.1.4 Specific components are incomplete in construction features or restricted in performance capabilities. Such components are intended for use only under limited conditions, such as certain temperatures not exceeding specified limits, and shall be used only under those specific conditions.

2.2 Units of measurement

2.2.1 If a value for measurement is followed by an equivalent value in other units in parentheses, the second value may be only approximate. The first stated value is the requirement.

2.2.2 Unless otherwise indicated, all voltage and current values specified in this standard are rms.

2.3 Undated references

2.3.1 Any undated reference to a code or standard appearing in the requirements of this standard shall be interpreted as referring to the latest edition of that code or standard.

2.4 Terminology

2.4.1 The term "product" as used in this standard refers to all types of central-station burglar-alarm units.

3 Glossary

3.1 For the purpose of this standard, the following definitions apply.

3.2 ACKNOWLEDGMENT SIGNAL – An audible and/or visual signal that is sent to the subscriber by the central station to notify the subscriber that a signal has been received indicating that the protection system has been properly armed. The acknowledgment signal can be sent manually or automatically.

3.3 ADMINISTRATOR – An authorized entity that is in possession of the credentials necessary for the ability to perform an upgrade to a control unit's software and/or firmware.

3.4 BIOMETRICS – Authentication of human physical characteristics used to identify an individual.

3.5 CIRCUITS, ELECTRICAL:

a) High-Voltage – A circuit involving a potential of not more than 600 volts and having circuit characteristics in excess of those of a low-voltage power-limited circuit.

b) Low-Voltage – A circuit involving a potential of not more than 30 volts rms, 42.4 volts DC or AC peak.

c) Power-Limited – A circuit whose output is limited as specified in Table 3.1 and Table 3.2. The power limitation shall be provided by the construction of the transformer, a fixed impedance, a noninterchangeable fuse, a nonadjustable manual reset circuit protective device, or a regulating network.

Documents
Document Sharing Hub
Full document details: UL 1610 2021

Table 3.1
Power limitations for inherently limited power source (overcurrent protection not required)

Circuit voltage V_{max}[a] AC-DC, volts	Maximum nameplate ratings		Current limitation I_{max},[b] amperes
	VA, volt-amperes	Current, amperes	
0 to 20	5.0 x V_{max}[a]	5.0	8.0
over 20 to 30	100	100/V_{max}[a]	8.0
over 30 to 100	100	100/V_{max}[a]	150/V_{max}[a]
over 100 to 250 DC[a] only	0.030 x V_{max}[a]	0.030	0.030

NOTE – Reprinted with permission from NFPA 70-1993, the National Electrical Code®, Copyright© 1992, National Fire Protection Association, Quincy, MA 02269. This reprinted material is not the complete and official position of the National Fire Protection Association, on the referenced subject is represented only by the standard in its entirety.

[a] V_{max}: Maximum output voltage regardless of load with rated input applied. 0 – 20 V-rms, 0 – 28.3 DC or AC peak; 20 – 30 V rms, 28.3 – 42.4 DC or AC peak.

[b] I_{max}: Maximum output current after 1 minute of operation under any noncapacitive load, including short circuit.

Table 3.2
Power limitations for power sources not inherently limited (overcurrent protection required)

Circuit voltage V_{max}[a] AC-DC, volts	Maximum nameplate ratings		Current limitation I_{max},[b] amperes	Power limitation $(VA)_{max}$,[c] volt-amperes	Maximum overcurrent protection, amperes
	VA, volt-amperes	Current, amperes			
0 to 20	5.0 x V_{max}[a]	5.0	1000/V_{max}[a]	250[d]	5.0
over 20 to 100	100	100/V_{max}[a]	1000/V_{max}[a]	250[d]	100/V_{max}[a]
over 100 to 150	100	100/V_{max}[a]	1.0	NA	1.0

NOTE – Reprinted with permission from NFPA 70-1993, the National Electrical Code®, Copyright© 1992, National Fire Protection Association, Quincy, MA 02269. This reprinted material is not the complete and official position of the National Fire Protection Association, on the referenced subject is represented only by the standard in its entirety.

[a] V_{max}: Maximum output voltage regardless of load with rated input applied. See footnote a to Table 3.1.

[b] I_{max}: Maximum output current after 1 minute of operation under any noncapacitive load, including short circuit, and with overcurrent protection bypassed.

[c] $(VA)_{max}$: Maximum volt-ampere output regardless of load with overcurrent protection bypassed.

[d] If the power source is a transformer $(VA)_{max}$ is 350 or less than V_{max} is 15 or less.

3.6 CORD-CONNECTED UNIT – A unit intended for connection to the power source by means of a supply cord. Such a unit is intended to be moved for reasons of interchange or realignment of the units of a system.

3.7 CREDENTIAL – A mechanism that defines or distinguishes the identity of an entity (e.g. a password, or PIN or biometric).

3.8 CRYPTOGRAPHIC AUTHENTICATION – Algorithms intended to ensure the secrecy and/or authenticity of messages.

3.9 DIGITAL ALARM COMMUNICATOR (DAC) – A transmission method as outlined in the Standard for Digital Alarm Communicator System Units,UL 1635, by cellular and/or telephone landline transmission.

3.10 ENTITY – Person, device, and/or appliance or service which interacts with a control unit.

AVA Documents
Document Sharing Hub
Full document details: UL 1610 2021

3.11 EVENT LOG – A comprehensive data record, maintained at the control unit and/or central station of the events that are associated with remote access.

3.12 FIXED EQUIPMENT – A device intended to be permanently connected electrically.

3.13 HARDWIRE KEY DEVICE – A mechanical or electronic device employed to enable the remote programming mode.

3.14 LINE-VOLTAGE – The voltage at any field connected source of supply, nominally 50 – 60 Hertz (Hz); and either 115, 208, or 230 volts.

3.15 MANAGED FACILITIES-BASED VOICE NETWORK (MFVN) – A physical facilities-based network capable of transmitting real time signals with formats unchanged that is managed, operated, and maintained by the service provider to ensure service quality and reliability from the subscriber location to public switched telephone network (PSTN) interconnection points or other MFVN peer networks.

Reproduced with permission from NFPA 72®-2016, National Fire Alarm Code®, Copyright © 2015, National Fire Protection Association.

3.16 MULTIPLEXING – A signaling method using wire path, cable carrier, radio, or combinations of these methods characterized by the simultaneous and/or sequential transmission and reception of multiple signals in a communication channel including means for positively identifying each such signal.

3.17 NORMAL STANDBY CONDITION – The ready-to-operate condition of the product existing prior to its being tripped or operated by an intrusion.

3.18 PACKET SWITCHED DATA NETWORK (PSDN) – A type of data transmission in which data is divided into packets, each of which has a destination address. Each packet is then routed across a computer network. A packet may travel a different route than packets related to it.

3.19 PLAINTEXT – A character representation that is plainly readable as text and not masked and/or hidden.

3.20 PORTABLE EQUIPMENT – Cord- and plug-connected equipment that is capable of being carried or moved about.

3.21 PRIMARY BATTERY – A battery that by construction is not intended to be recharged.

3.22 RADIO FREQUENCY – Electromagnetic radiation, nominally above 20 kilohertz.

3.23 REMOTE ACCESS – The act of accessing a control unit at a distance from the protected premises, whereby the user does not have visual contact of the premises. Key FOB's are not included in this definition; because they are intended to be used when in visual contact with the protected premises and are very limited in the distance they may be used.

3.24 REMOTE COMMUNICATION – Data exchange in which information is exchanged between the control unit and an authorized entity.

3.25 REMOTE OPERATION – The connection to the protected premises control unit via remote communications.

3.26 SAFETY CIRCUIT – Any primary or secondary circuit that is relied upon to reduce the risk of fire, electric shock, or unintentional contact with moving parts that may cause injury to persons (for example, an interlock circuit).

AVA Documents
Document Sharing Hub
Full document details: UL 1610 2021

3.27 SECONDARY BATTERY – A battery that by construction is intended to be recharged.

3.28 SIGNAL TRANSMISSION METHODS – Any of the following methods; direct wire, multiplex, derived channel, two way radio (RF), DACT/DACR, one way radio (RF), packet switched data network, or code transmitter.

3.29 STATIONARY EQUIPMENT – Cord- and plug-connected equipment that is intended to be fastened in place, or located in a dedicated space.

3.30 TRUSTED PHYSICAL PATH – A contiguous and visible path for communications constructed of physical media. A directly connected crossover network cable, USB cable, or vendor approved cable would be considered a trusted path.

3.31 USER – A person who has authorized access to the control unit.

3.32 USER VALIDATION – The act of an electronic device, upon the input of “user credentials”, validating that the credentials are legitimate, allowing the user to proceed to access the system, or upon failure to match the credentials, deny access to the system. (See Appendix B).

4 Installation and Operating Instructions

4.1 A copy of the:

a) Installation and operating instructions intended to accompany each product or component as produced,

b) Related schematic wiring diagrams, and

c) Installation drawings

shall be furnished with the sample submitted for investigation, to be used as a guide in the examination and test of the product or component. For this purpose, a final printed edition is not required.

4.2 The instructions and drawings shall include at least the following:

a) Typical installation drawing layouts and a complete representative installation wiring diagram(s) for the product (s) indicating recommended locations and wiring methods that shall be in accordance with the National Electrical Code, ANSI/NFPA 70, the Standard for Installation and Classification of Burglar and Holdup Alarm Systems, UL 681, and the Standard for Central-Station Alarm Services, UL 827. Locations where installations are not recommended shall also be included.

b) Concise description of the operation, testing, and maintenance procedures for the product(s), and recommended testing frequency that shall be at least once per year.

c) Identification of replacement parts, such as lamps or batteries, by a part number, manufacturer's model number, or the equivalent.

d) A description of the conditions that might be expected to result in false alarms or impaired operation of the product(s).

e) A description of any features provided to reduce the risk of fire, electric shock, or injury to persons and a warning against bypassing such features.

Documents
Document Sharing Hub
Full document details: UL 1610 2021

4.3 The instructions may be incorporated on the inside of the product, on a separate sheet, or as part of a manual. If not included directly on the product, the instructions or manual shall be referenced in the marking information on the product. See Marking, General, Section 100.

5 Installation and Operating Instructions Physical Media

5.1 The installation diagram(s) and any special field installation instructions shall be attached to the unit or, when separate, shall be provided in printed hardcopy format. A copy shall be supplied with each individual product or with each single shipment when multiples of the same products are shipped directly (to an end customer) in a single shipment.

5.2 The following sections contain information that shall be provided in printed hardcopy format and supplied with the unit(s):

a) 4.2(a);

b) 13.2.3.1(b);

c) 13.2.3.2(a);

d) 13.2.3.2(b);

e) 13.2.3.2(c);

f) 13.3;

g) Section 34, Variable Ambient Test;

h) 100.1, Exception No. 1;

i) 100.3;

j) 100.4;

k) 100.11;

l) 103.3;

m) 103.4; and

n) 105.3.

5.3 Other installation instructions, operating and test instructions shall be made available by printed hardcopy or by electronic media such as a CD, DVD, website, or equivalent. Optionally, a copy may be supplied with each individual product or with each single shipment when multiples of the same products are shipped directly (to an end customer) in a single shipment.

6 Electric Shock

6.1 Any part that is exposed only during operator servicing shall not present the risk of electric shock. See Electric Shock Current Test, Section 37.

6.2 The insertion of the intended component into a socket of a device in the product shall not result in a risk of electric shock.

Documents
Document Sharing Hub
Full document details: UL 1610 2021

CONSTRUCTION

ASSEMBLY

7 General

7.1 Product assembly

7.1.1 The product shall be factory-built as a complete assembly and shall include all the components necessary for its intended function when installed and used as intended. The product may be shipped from the factory as two or more major subassemblies. See 7.1.2.

7.1.2 If the product is not assembled by the manufacturer as a complete unit, it shall be arranged in major subassemblies. Each subassembly shall be capable of being incorporated into a complete assembly without requiring alteration, cutting, drilling, threading, welding, or similar tasks by the installer. Two or more subassemblies that must bear a definite relationship to each other for the correct installation or operation of the product shall be arranged and constructed to permit them to be incorporated into the complete assembly only in the correct relationship without need for alteration or alignment, or such subassemblies shall be assembled, tested, and shipped from the factory as one unit.

7.2 Electrical protection

7.2.1 Louvers and other openings in the enclosure shall be constructed and located to reduce the risk of unintentional contact with uninsulated high-voltage live parts. In determining compliance with this requirement, parts such as covers, panels, and grilles used as part of the enclosure are to be removed unless tools are required for their removal or an interlock is provided. See also Protection of Service Personnel, Section 8.

7.2.2 Uninsulated high-voltage live parts shall be located, guarded, or enclosed as indicated in 7.2.3 – 7.2.5.

7.2.3 Openings directly over uninsulated high-voltage live parts shall not exceed 0.187 inch (4.75 mm) in any dimension, or shall be of a configuration as illustrated by Figure 7.1 for top cover designs and Figure 7.2 for side opening designs, or the equivalent.

Documents
Document Sharing Hub
Full document details: UL 1610 2021

Figure 7.1

Cross sections of top cover designs

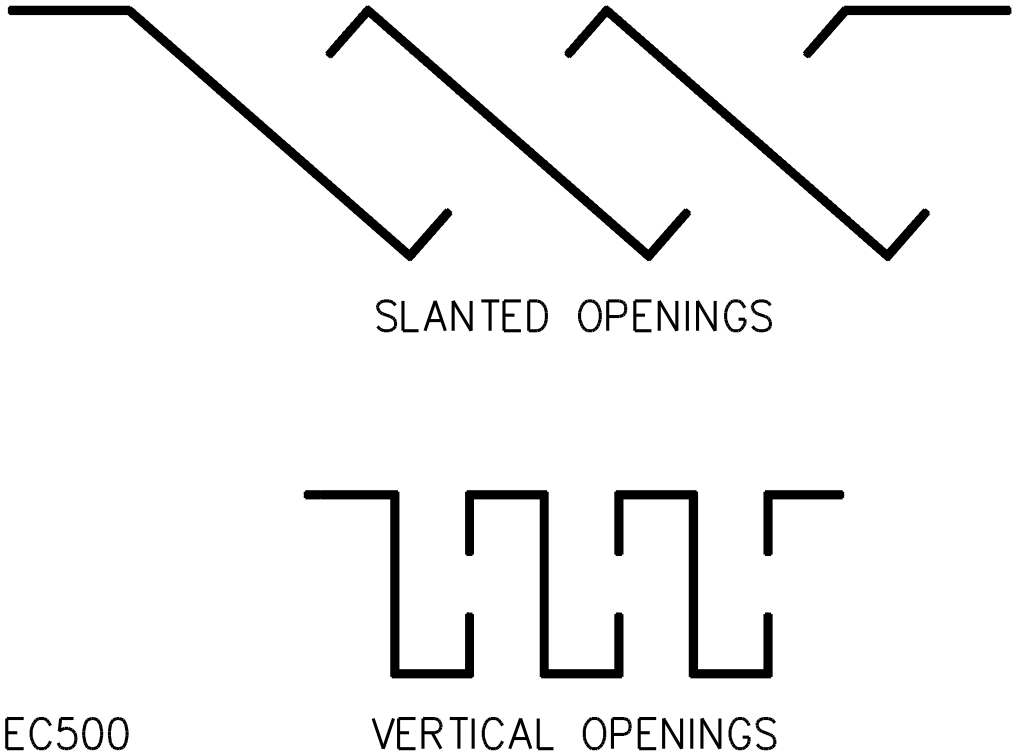

Documents
Document Sharing Hub
Full document details: UL 1610 2021

Figure 7.2

Cross sections of side louvers

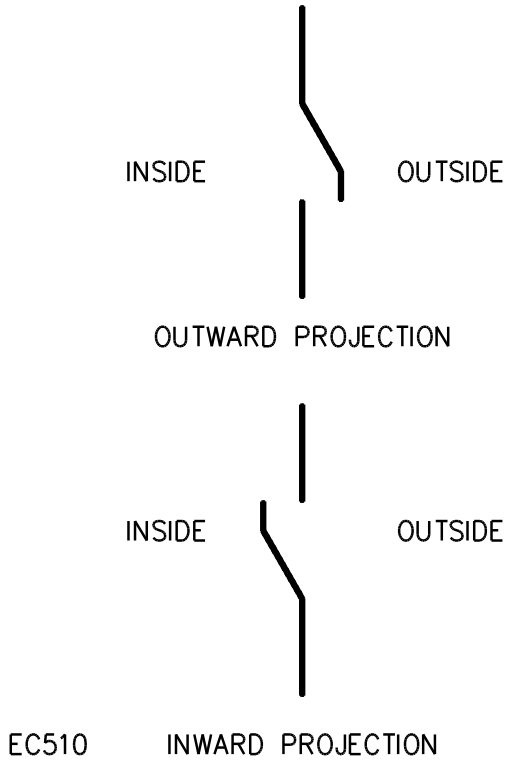

7.2.4 An opening in an electrical enclosure that does not permit entrance of a 1 inch (25.4 mm) diameter rod shall be sized and arranged so that a probe, as illustrated in Figure 7.3, cannot be made to contact any uninsulated live part (other than low voltage) when inserted through the opening in a straight or articulated position.

7.2.5 An opening that permits entrance of a 1 inch (25.4 mm) diameter rod may be used under the conditions described and illustrated in Figure 7.4.

Documents
Document Sharing Hub
Full document details: UL 1610 2021

Figure 7.3

Accessibility probe

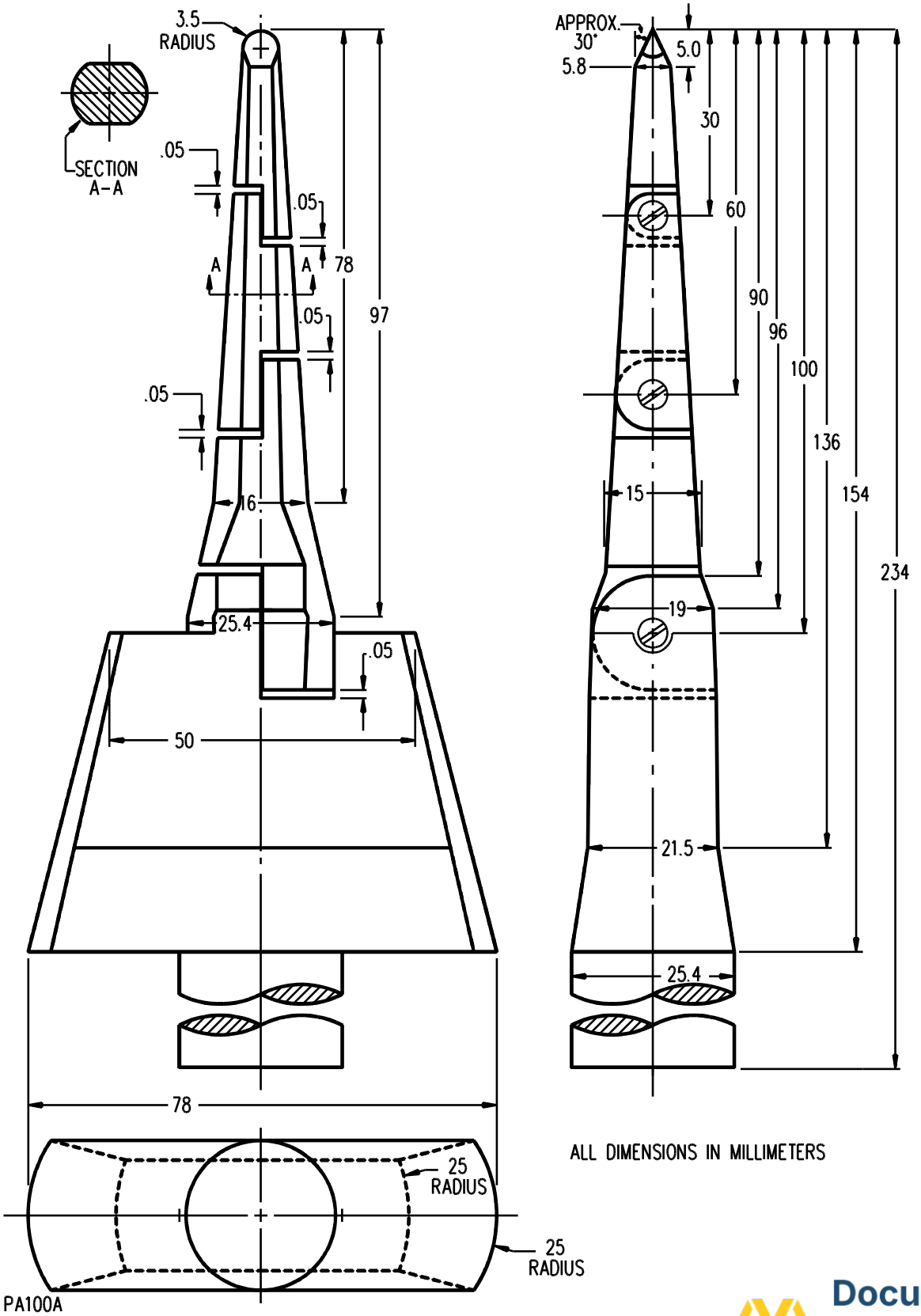

Documents
Document Sharing Hub
Full document details: UL 1610 2021

Figure 7.4

Opening in enclosure

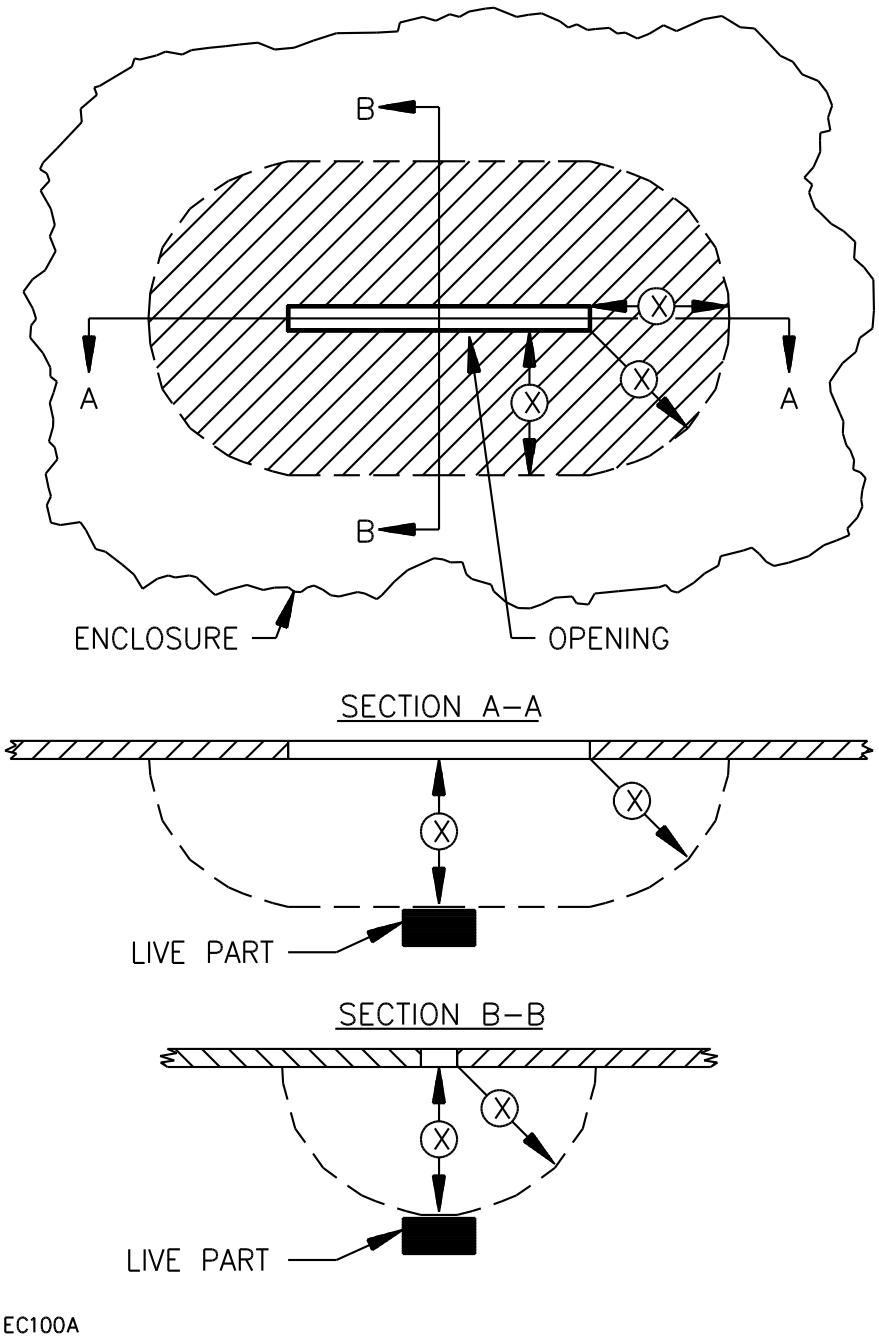

NOTE – The opening may be used if, within the enclosure, there is no uninsulated live part or film coated wire:

a) Less than X inches (mm) from the perimeter of the opening, as well as

b) Within the volume generated by projecting the perimeter X inches (mm) normal to its plane.

X equals five times the diameter of the largest diameter rod that can be inserted through the opening, but not less than 6-1/16 inches (154 mm).

Documents
Document Sharing Hub
Full document details: UL 1610 2021

7.2.6 Knockouts or openings in an alarm sounding device housing for the connection of circuits shall be in the mounting surface only.

8 Protection of Service Personnel

8.1 An uninsulated live part of a high-voltage circuit within the enclosure shall be located, guarded, or enclosed so as to reduce the risk of unintentional contact by persons performing service functions that may be performed while the equipment is energized.

8.2 During the examination of a product in connection with the requirements in 8.1, a part of the outer enclosure that may be removed without the use of tools, or a part of the outer enclosure that may be removed by the user to allow access for making routine operating adjustments, shall be disregarded; it shall be assumed that the removable part in question does not afford protection against the risk of electric shock.

8.3 An electrical component that may require examination, replacement, adjustment, servicing, or maintenance while the product is energized shall be located and mounted with respect to other components and with respect to grounded metal so that the component is accessible for such service, and risk of electric shock to the service person from adjacent uninsulated high-voltage live parts is reduced.

9 Enclosures

9.1 General

9.1.1 The enclosure of a product shall have the strength and rigidity to resist total or partial collapse and the attendant reduction of spacings, loosening or displacement of parts, or other defects. See Mechanical Strength Tests for Enclosures, Section 51.

9.1.2 Operating parts, such as gear mechanisms, light-duty relays, and similar devices, shall be enclosed to protect against malfunction due to dust or other material that may impair their intended operation.

9.1.3 An enclosure containing other than power-limited circuits shall be constructed to reduce the possibility of emission of flame, molten metal, flaming or glowing particles, or flaming drops. See Ignition Through Bottom-Panel Openings Tests, Section 50.

9.1.4 The requirement in 9.1.3 necessitates either a nonflammable bottom in accordance with the requirements in 9.3.2, or a protective barrier as illustrated in Figure 9.1 under all areas containing combustible materials.

Exception: Openings not larger than 1/16 square inch (40.3 mm^2) may be provided for the bottom of the enclosure under areas containing only materials classified as V-1 or less flammable. See 9.3.3.

Documents
Document Sharing Hub
Full document details: UL 1610 2021

Figure 9.1

Protective barrier

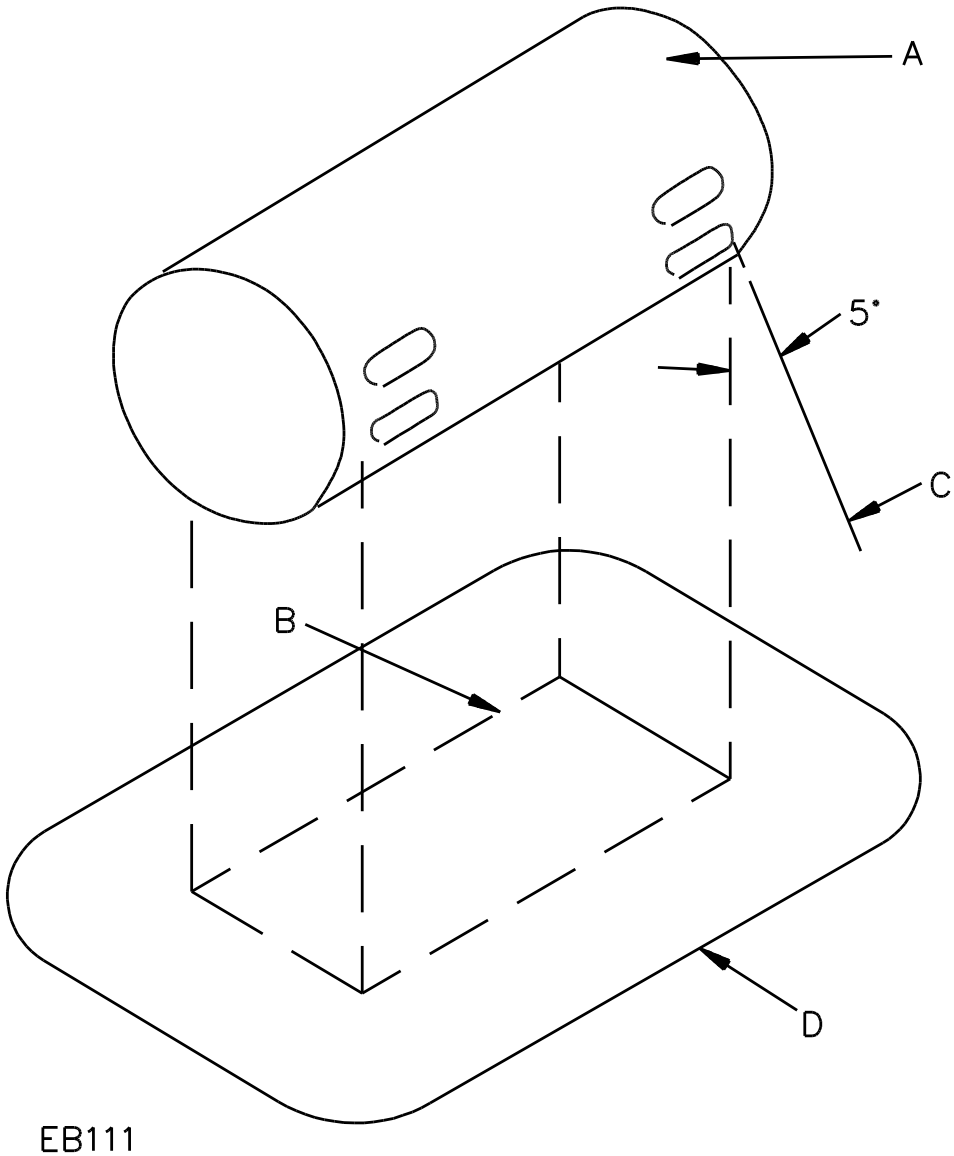

NOTES

A – The entire component under which a barrier (flat or dished with or without a lip or other raised edge) of noncombustible material is to be provided. The sketch above is of a metal enclosed component with ventilating openings to show that the protective barrier is required only for those openings from which flaming parts might drop. If the component or assembly does not have its own noncombustible enclosure, the area to be protected would be the entire area occupied by the component or assembly.

B – Projection of the outline of the area of (A) which needs a bottom barrier vertically downward onto the horizontal plane of the lowest point on the outer edge (D) of the barrier.

C – Inclined line that traces out an area (D) on the horizontal plane of the barrier. Moving around the perimeter of the area (B) which requires a bottom barrier, this line projects at a 5-degree angle from the line extending vertically at every point around the perimeter of (A) and oriented to trace out the largest area, except that the angle may be less than 5 degrees if the barrier or portion of the bottom cover contacts a vertical barrier or side panel of noncombustible material, or if the horizontal extension of the barrier (B) to (D) would exceed 6 inches (152 mm).

D – Minimum outline of the barrier, except that the extension (B) to (D) need not exceed 6 inches (152 mm) (flat or dished with or without lip or other raised edge). The bottom of the barrier may be flat or formed in any manner provided that every point of area (D) is at or below the lowest point on the outer edge of the barrier.

Documents
Document Sharing Hub
Full document details: UL 1610 2021

9.1.5 A construction using individual barriers under components, groups of components or assemblies, as illustrated in Figure 9.1 is considered to comply with the requirement in 9.1.3.

9.2 Doors and covers

9.2.1 An enclosure cover shall be hinged, sliding, or similarly attached so it cannot be removed if it gives access to fuses or any other overcurrent protective device, the intended functioning of which requires renewal; or if it is necessary to open the cover in connection with the intended operation of the unit.

Exception No. 1: If its position is supervised by a tamper contact that is connected in the closed protective circuit, an enclosure cover need not comply with the requirements of this paragraph. See also 31.5.

Exception No. 2: These requirements do not apply to a product located at a central-station.

9.2.2 Fasteners requiring the use of a tool or key shall be used for the assembly of all enclosures if access is not required for operation of the product.

Exception: This requirement does not apply to a product located at a central-station.

9.2.3 The cover of an enclosure shall be provided with a supervisory contact, connected in the closed protective wiring circuit, if it gives access to any relays, terminals, controls, or related components that might be subject to tampering without causing an alarm signal.

Exception: An enclosure located inside of a completely protected safe or vault, or at a central-station need not comply with this requirement.

9.3 Enclosure openings

9.3.1 Openings in the enclosure shall be so constructed and of such size that direct entry of foreign objects is prevented. See also 7.2.3. See Figure 7.1 for examples of top cover constructions that may be used to prevent direct entry. See Figure 7.2 for examples of side opening constructions which may be used.

9.3.2 Openings may be provided in the bottom panels or protective barriers under areas containing materials not classified as V-1 or less flammable, in accordance with the Standard for Tests for Flammability of Plastic Materials for Use in Devices and Appliances, UL 94, if constructed in a manner that prevents materials from falling directly from the interior of the product onto the supporting surface or onto any other location under the product. Figure 9.2 illustrates a type of baffle that complies with this requirement. A second construction that complies with this requirement is a 0.040 inch (1.02 mm) sheet steel bottom panel in which round holes of 5/64 inch (2.0 mm) maximum diameter are spaced not closer together than 1/8 inch (3.2 mm) center-to-center. Constructions other than these two may be used if they comply with the Ignition Through Bottom-Panel Openings Tests, Section 50.

Documents
Document Sharing Hub
Full document details: UL 1610 2021

Figure 9.2

Bottom panel baffles

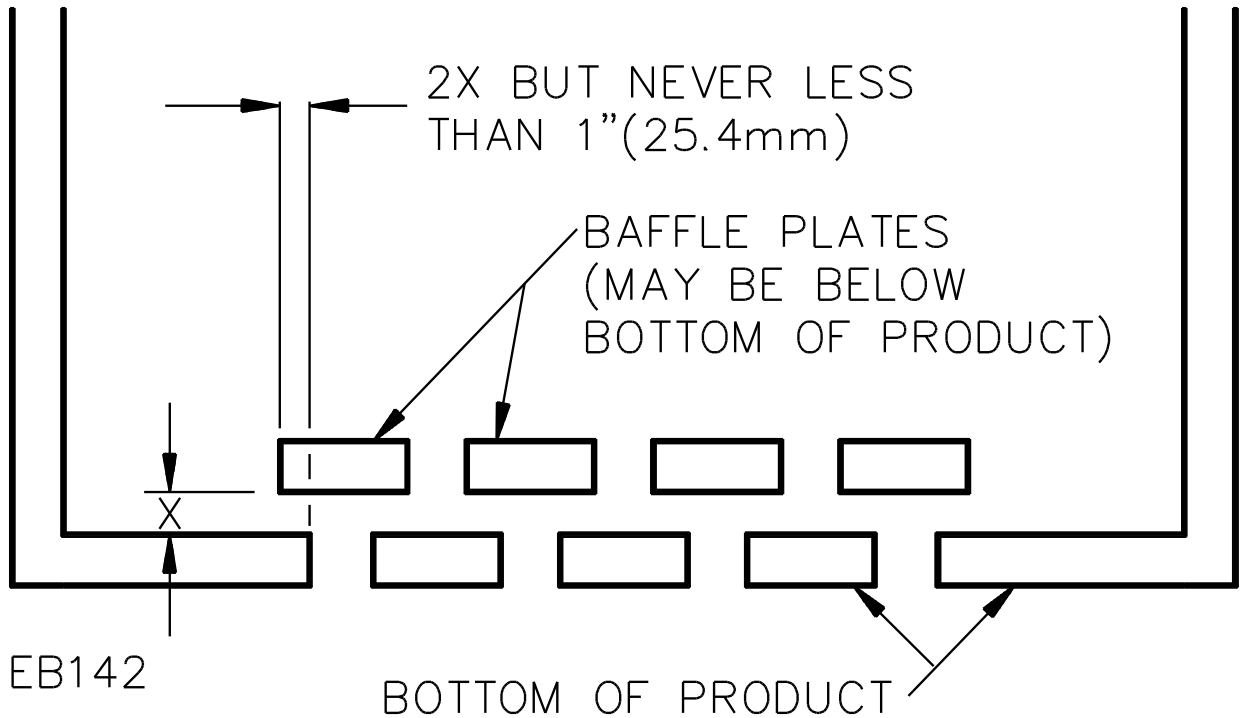

9.3.3 The bottom of the enclosure under areas containing only materials classified as V-1 or less flammable may have openings not larger than 1/16 square inch (40.3 mm^2).

9.3.4 Openings may be used, without limitation on the size or number of openings, in areas containing only CTFE, FEP, PVC, TFE, and neoprene insulated wire or cable, in areas containing plugs and receptacles, and in areas underneath impedance protected or thermally protected motors.

9.3.5 Openings in the enclosure shall not give access to relays, terminals, controls, or related components that might be subject to tampering by hand or with tools without causing an alarm or trouble signal.

9.4 Screens and expanded metal

9.4.1 Screens or expanded metal used as a guard, enclosure, or part of an enclosure, shall comply with the requirements in 9.4.2 and 9.4.3, and the Mechanical Strength Tests for Enclosures, Section 51.

9.4.2 Perforated sheet steel and sheet steel used for expanded metal mesh shall be not less than 0.042 inch (1.07 mm) thick if uncoated or 0.046 inch (1.17 mm) thick if zinc-coated if the mesh openings or perforations are 1/2 square inch (323 mm^2) or less in area and shall be not less than 0.080 inch (2.03 mm) thick if uncoated or 0.084 inch (2.13 mm) thick if zinc-coated for larger openings. The largest dimension of this material shall not exceed 4 inches (102 mm).

Exception: If the indentation of a guard or the enclosure will not alter the clearance between uninsulated live parts and grounded metal so as to impair performance or reduce spacings below the minimum required values (see Spacings, General, Section 24, and the Mechanical Strength Tests for Enclosures

AVA Documents
Document Sharing Hub
Full document details: UL 1610 2021

Section 51), 0.021 inch (0.53 mm) expanded steel mesh or perforated sheet steel [0.023 inch (0.58 mm) if zinc coated] may be used, if:

a) The exposed mesh on any one side or surface of the product so protected has an area of not more than 72 square inches (464 cm^2) and has no dimension greater than 12 inches (305 mm) or

b) The width of an opening covered by this material is not greater than 3-1/2 inches (89 mm).

9.4.3 The wires of a screen shall not be less than 16 AWG (1.3 mm^2 diameter) steel if the screen openings are 1/2 square inch (323 mm^2) or less in area, and shall not be less than 12 AWG (2.1 mm^2 diameter) steel for larger screen openings.

9.5 Cast metal

9.5.1 The minimum thickness of cast metal for an enclosure shall be as indicated in Table 9.1.

Exception: Cast metal of lesser thickness may be used if, considering the shape, size, and function of the enclosure, the cast metal has been determined to provide the same level of mechanical strength. See the Drop Test, Section 48, and the Mechanical Strength Tests for Enclosures, Section 51.

Table 9.1
Cast-metal enclosures

Use, or dimensions of area involved[a]	Minimum thickness			
	Die-cast metal,		Cast metal of other than the die-cast type,	
	inch	(mm)	inch	(mm)
Area of 24 square inches (155 cm^2) or less and having no dimension greater than 6 inches (152 mm)	1/16[a]	(1.6)	1/8	(3.2)
Area greater than 24 square inches (155 cm^2) or having any dimension greater than 6 inches (152 mm)	3/32	(2.4)	1/8	(3.2)
At a threaded conduit hole	1/4	(6.4)	1/4	(6.4)
At an unthreaded conduit hole	1/8	(3.2)	1/8	(3.2)

[a] The area limitation for metal 1/16 inch (1.6 mm) thick may be obtained by the provision of reinforcing ribs subdividing a larger area.

9.5.2 If threads for the connection of conduit are tapped through a hole in an enclosure wall, or if an equivalent construction is used, there shall be not less than 3-1/2 nor more than 5 threads in the metal, and the construction shall permit a standard conduit bushing to be attached as intended.

9.5.3 If threads for the connection of conduit are tapped only part of the way through a hole in an enclosure wall, there shall be not less than 3-1/2 full threads in the metal, and there shall be a smooth, rounded inlet hole for the conductors that has been determined to provide the same level of protection to the conductors as that of a standard conduit bushing.

9.6 Sheet metal

9.6.1 The thickness of sheet metal for an enclosure shall be not less than that indicated in Table 9.2 or Table 9.3, whichever applies.

Exception: Sheet metal of lesser thickness may be employed if, considering the shape, size, and function of the enclosure, it provides equivalent mechanical strength. See the Drop Test, Section 48, and the Mechanical Strength Tests for Enclosures, Section 51.

Documents
Document Sharing Hub
Full document details: UL 1610 2021

Table 9.2
Minimum thickness of sheet metal for electrical enclosures carbon steel or stainless steel

Without supporting frame[a]				With supporting frame or equivalent reinforcing[a]				Minimum thickness uncoated,		Minimum thickness metal coated,	
Maximum width,[b]		Maximum length,[c]		Maximum width,[b]		Maximum length,		inch	(mm)	inch	(mm)
inches	(cm)	inches	(cm)	inches	(cm)	inches	(cm)	[MSG]		[GSG]	
4.0	(10.2)	Not limited		6.25	(15.9)	Not limited		0.020	(0.51)	0.023	(0.58)
4.75	(12.1)	5.75	(14.6)	6.75	(17.1)	8.25	(21.0)	[24]		[24]	
6.0	(15.2)	Not limited		9.5	(24.1)	Not limited		0.026	(0.66)	0.029	(0.74)
7.0	(17.8)	8.75	(22.2)	10.0	(25.4)	12.5	(31.8)	[22]		[22]	
8.0	(20.3)	Not limited		12.0	(30.5)	Not limited		0.032	(0.81)	0.034	(0.86)
9.0	(22.9)	11.5	(29.2)	13.0	(33.0)	16.0	(40.6)	[20]		[20]	
12.5	(31.8)	Not limited		19.5	(49.5)	Not limited		0.042	(1.07)	0.045	(1.14)
14.0	(35.6)	18.0	(45.7)	21.0	(53.3)	25.0	(63.5)	[18]		[18]	
18.0	(45.7)	Not limited		27.0	(68.6)	Not limited		0.053	(1.35)	0.056	(1.42)
20.0	(50.8)	25.0	(63.5)	29.0	(73.7)	36.0	(91.4)	[16]		[16]	
22.0	(55.9)	Not limited		33.0	(83.8)	Not limited		0.060	(1.52)	0.063	(1.60)
25.0	(63.5)	31.0	(78.7)	35.0	(88.9)	43.0	(109.2)	[15]		[15]	
25.0	(63.5)	Not limited		39.0	(99.1)	Not limited		0.067	(1.70)	0.070	(1.78)
29.0	(73.7)	36.0	(91.4)	41.0	(104.1)	51.0	(129.5)	[14]		[14]	
33.0	(83.8)	Not limited		51.0	(129.5)	Not limited		0.080	(2.03)	0.084	(2.13)
38.0	(96.5)	47.0	(119.4)	54.0	(137.2)	66.0	(167.6)	[13]		[13]	
42.0	(106.7)	Not limited		64.0	(162.6)	Not limited		0.093	(2.36)	0.097	(2.46)
47.0	(119.4)	59.0	(149.9)	68.0	(172.7)	84.0	(213.4)	[12]		[12]	
52.0	(132.1)	Not limited		80.0	(203.2)	Not limited		0.108	(2.74)	0.111	(2.82)
60.0	(152.4)	74.0	(188.0)	84.0	(213.4)	103.0	(261.6)	[11]		[11]	
63.0	(160.0)	Not limited		97.0	(246.4)	Not limited		0.123	(3.12)	0.126	(3.20)
73.0	(185.4)	90.0	(228.6)	103.0	(261.6)	127.0	(322.6)	[10]		[10]	

[a] A supporting frame is a structure of angle or channel or a folded rigid section of sheet metal which is rigidly attached to and has essentially the same outside dimensions as the enclosure surface and which has sufficient torsional rigidity to resist the bending moments which may be applied via the enclosure surface when it is deflected. Construction that is considered to have equivalent reinforcing may be accomplished by designs that will produce a structure which is as rigid as one built with a frame of angles or channels. Construction considered to be without supporting frame includes:

1) Single sheet with single formed flanges (formed edges),

2) A single sheet which is corrugated or ribbed, and

3) An enclosure surface loosely attached to a frame; for example, with spring clips.

[b] The width is the smaller dimension of a rectangular sheet metal piece which is part of an enclosure. Adjacent surfaces of an enclosure may have supports in common and be made of a single sheet.

[c] For panels which are not supported along one side, for example, side panels of boxes, the length of the unsupported side shall be limited to the dimensions specified unless the side in question is provided with a flange at least 1/2 inch (12.7 mm) wide.

Documents
Document Sharing Hub
Full document details: UL 1610 2021

Table 9.3
Minimum thickness of sheet metal for electrical enclosures aluminum, copper, or brass

Without supporting frame[a]				With supporting frame or equivalent reinforcing[a]					
Maximum width,[b]		Maximum length,[c]		Maximum width,[b]		Maximum length,		Minimum thickness,	
inches	(cm)	inches	(cm)	inches	(cm)	inches	(cm)	inch	(mm)
3.0	(7.6)	Not limited		7.0	(17.8)	Not limited			
3.5	(8.9)	4.0	(10.2)	8.5	(21.6)	9.5	(24.1)	0.023	(0.58)
4.0	(10.2)	Not limited		10.0	(25.4)	Not limited			
5.0	(12.7)	6.0	(15.2)	10.5	(26.7)	13.5	(34.3)	0.029	(0.74)
6.0	(15.2)	Not limited		14.0	(35.6)	Not limited			
6.5	(16.5)	8.0	(20.3)	15.0	(38.1)	18.0	(45.7)	0.036	(0.91)
8.0	(20.3)	Not limited		19.0	(48.3)	Not limited			
9.5	(24.1)	11.5	(29.2)	21.0	(53.3)	25.0	(63.5)	0.045	(1.14)
12.0	(30.5)	Not limited		28.0	(71.1)	Not limited			
14.0	(35.6)	16.0	(40.6)	30.0	(76.2)	37.0	(94.0)	0.058	(1.47)
18.0	(45.7)	Not limited		42.0	(106.7)	Not limited			
20.0	(50.8)	25.0	(63.5)	45.0	(114.3)	55.0	(139.7)	0.075	(1.91)
25.0	(63.5)	Not limited		60.0	(152.4)	Not limited			
29.0	(73.7)	36.0	(91.4)	64.0	(162.6)	78.0	(198.1)	0.095	(2.41)
37.0	(94.0)	Not limited		87.0	(221.0)	Not limited			
42.0	(106.7)	53.0	(134.6)	93.0	(236.2)	114.0	(289.6)	0.122	(3.10)
52.0	(132.1)	Not limited		123.0	(312.4)	Not limited			
60.0	(152.4)	74.0	(188.0)	130.0	(330.2)	160.0	(406.4)	0.153	(3.89)

[a] A supporting frame is a structure of angle or channel or a folded rigid section of sheet metal which is rigidly attached to and has essentially the same outside dimensions as the enclosure surface and which has sufficient torsional rigidity to resist the bending moments which may be applied via the enclosure surface when it is deflected. Construction that is considered to have equivalent reinforcing may be accomplished by designs that will produce a structure which is as rigid as one built with a frame of angles or channels. Construction considered to be without supporting frame includes:

1) A single sheet with single formed flanges (formed edges),

2) A single sheet which is corrugated or ribbed, and

3) An enclosure surface loosely attached to a frame; for example, with spring clips.

[b] The width is the smaller dimension of a rectangular sheet metal piece which is part of an enclosure. Adjacent surfaces of an enclosure may have supports in common and be made of a single sheet.

[c] For panels which are not supported along one side, for example, side panels of boxes, the length of the unsupported side shall be limited to the dimensions specified unless the side in question is provided with a flange at least 1/2 inch (12.7 mm) wide.

9.6.2 A sheet metal member to which a wiring system is to be connected in the field shall have a thickness not less than 0.032 inch (0.81 mm) if of uncoated steel, not less than 0.034 inch (0.86 mm) if of galvanized steel, and not less than 0.045 inch (1.14 mm) if of nonferrous metal.

9.6.3 A plate or plug closure for an unused conduit opening or other hole in the enclosure shall not be less than 0.027 inch (0.69 mm) thick if of steel or 0.032 inch (0.81 mm) thick if of nonferrous metal, for a hole having a 1-3/8 inch (34.9 mm) diameter maximum dimension.

9.6.4 A closure for a hole larger than 1-3/8 inch (34.9 mm) diameter shall have a thickness equal to that required for the enclosure of the product or a standard knockout seal shall be used. Such closures shall be securely mounted.

AVA Documents
Document Sharing Hub

Full document details: UL 1610 2021

9.6.5 A knockout in a sheet metal enclosure shall be capable of being removed without excess deformation of the enclosure.

9.6.6 A knockout shall be provided with a surrounding surface of sufficient area to provide for seating of a conduit bushing and shall be located so that installation of a bushing at any knockout likely to be used during installation will not result in spacings between uninsulated live parts and the bushing of less than those specified under Spacings, General, Section 24.

9.7 Product enclosure mounting

9.7.1 An enclosure shall have means for mounting that shall be accessible without disassembly of any operating part of the product. Removal of a completely assembled panel to mount the enclosure is not considered to be disassembly of an operating part.

9.8 Polymeric materials

9.8.1 Among the factors to be taken into consideration when judging the acceptability of a nonmetallic enclosure are:

a) The mechanical strength,

b) Resistance to impact,

c) Moisture-absorptive properties,

d) Flammability and resistance to ignition from electrical sources,

e) Dielectric strength, insulation resistance, and resistance to arc tracking, and

f) Resistance to distortion and creeping at temperatures to which the material may be subjected under any conditions of use.

All these factors shall be considered with respect to aging in accordance with the Polymeric Materials Test, Section 46, and the Mechanical Strength Tests for Enclosures, Section 51.

10 Corrosion Protection

10.1 Iron and steel parts (other than bearings and the like where such protection is impracticable) shall be protected against corrosion by enameling, galvanizing, sherardizing, plating, or other means providing such protection. Bearing surfaces shall be of such materials and construction as to resist binding due to corrosion.

10.2 The requirement in 10.1 applies to all enclosures of sheet steel or cast iron, and to all springs and other parts upon which intended mechanical operation may depend.

Exception No. 1: This requirement does not apply to parts, such as washers, screws, bolts, and the like, if corrosion of such unprotected parts would not be likely to result in a risk of fire, electric shock, or unintentional contact with moving parts that may cause injury to persons, or to impair the operation of the unit.

Exception No. 2: Parts made of stainless steel, polished or treated, if necessary, do not require additional protection against corrosion.

10.3 Metals shall be galvanically compatible.

Documents
Document Sharing Hub

Full document details: UL 1610 2021

Exception: If galvanic action does not impair intended operation of the product, or result in the risk of fire, electric shock, or unintentional contact with moving parts that may cause a risk of injury to persons, this requirement does not apply.

10.4 Hinges and other attachments shall be resistant to corrosion.

FIELD IRING CONNECTIONS

11 General

11.1 Wiring terminals or leads shall be provided for connection of conductors of at least the size required by the National Electrical Code, ANSI/NFPA 70.

12 Cord-Connected Products

12.1 A portable product that is intended to be connected to high-voltage or line voltage shall be provided with not less than 6 feet (1.83 m) of flexible cord and a two- or three-prong attachment plug of a type rated for connection to the supply circuit.

Exception: The cord may be less than 6 feet in length if it is evident that the use of the longer cord may result in damage to the cord or product; may result in a risk of fire, electric shock, or injury to persons; may impair intended operation of the product; or is not required for the intended operation of the product.

12.2 A flexible cord may be used with a stationary product.

12.3 A flexible cord shall be of Type SJ, SJT, or equivalent, having conductors not smaller than 18 AWG (0.82 mm^2). It shall be rated for use at the voltage and ampacity rating of the product.

12.4 The power supply cord shall be provided with strain relief means so that a stress on the cord will not be transmitted to terminals, splices, or internal wiring. See the Strain Relief Test, Section 49.

12.5 If a knot in a flexible cord serves as strain relief, a surface against which the knot may bear or with which it may come in contact shall be free from projections, sharp edges, burrs, fins, and the like that may cause abrasion of the insulation on the conductors.

12.6 Clamps of any material (metal or otherwise) may be used on cords and supply leads without varnished-cloth insulating tubing or the equivalent under the clamp unless the tubing or the equivalent is necessary to prevent the clamp from damaging the cord or supply leads.

12.7 The supply cord or supply leads shall be prevented from being pushed into the unit through the cord-entry hole if such displacement is likely to:

a) Subject the cord or supply leads to mechanical damage or exposure to a temperature higher than that for which the cord or supply leads are rated,

b) Reduce spacings (such as to a metal strain-relief clamp) below the minimum required values, or

c) Damage internal connections or components.

Documents
Document Sharing Hub
Full document details: UL 1610 2021

13 Permanently-Connected Products

13.1 General

13.1.1 A permanently-connected product shall have provision for connection of one of the wiring systems in accordance with the National Electrical Code, ANSI/NFPA 70.

13.1.2 A knockout provided for connection of a field-wiring system to a field-wiring compartment shall accommodate conduit of the trade size determined as specified in Table 13.1.

Table 13.1
Trade size of conduit, inches (mm OD)

Wire size,		Number of wires									
AWG	(mm^2)	2		3		4		5		6	
14	(2.1)	1/2	(21.3)	1/2	(21.3)	1/2	(21.3)	1/2	(21.3)	1/2	(21.3)
12	(3.3)	1/2	(21.3)	1/2	(21.3)	1/2	(21.3)	3/4	(26.7)	3/4	(26.7)
10	(5.3)	1/2	(21.3)	1/2	(21.3)	1/2	(21.3)	3/4	(26.7)	3/4	(26.7)
8	(8.4)	3/4	(26.7)	3/4	(26.7)	1	(33.4)	1	(33.4)	1-1/4	(42.3)
6	(13.3)	3/4	(26.7)	1	(33.4)	1	(33.4)	1-1/4	(42.3)	1-1/4	(42.3)

NOTE – This table is based on the assumption that all conductors will be of the same size and there will not be more than six conductors in the conduit. If more than six conductors will be involved or if all of them are not of the same size, the internal cross-sectional area of the smallest conduit that may be used is determined by multiplying by 2.5 the total cross-sectional area of the wires, based on the cross-sectional area of Type THW wire.

13.1.3 The location of a terminal box or compartment in which power supply connections are to be made shall permit the connections to be accessible without removal of parts other than a service cover or panel and the cover of the outlet box or compartment in which the connections are made.

13.1.4 A terminal compartment intended for the connection of a supply raceway shall be secured in position and shall be prevented from turning.

13.1.5 The product shall be provided with field-wiring terminals or leads for the connection of conductors having an ampacity not less than that required by the product. It is assumed that branch circuit conductors rated 60°C (140°F) will be used.

13.2 Field-wiring terminals

13.2.1 General

13.2.1.1 As specified in these requirements, field-wiring terminals are those terminals to which power supply (including equipment grounding) or control connections will be made in the field when the product is installed as intended.

13.2.1.2 A field wiring terminal shall comply with:

a) 13.2.2.1 – 13.2.2.5;

b) The field wiring requirements in the Standard for Electrical Quick-Connect Terminals, UL 310;

c) The Standard for Wire Connectors, UL 486A-486B;

Documents
Document Sharing Hub
Full document details: UL 1610 2021

d) The Standard for Equipment Wiring Terminals for Use With Aluminum and/or Copper Conductors, UL 486E; or

e) The field wiring requirements (Code 2) in the Standard for Terminal Blocks, UL 1059.

The current-carrying parts shall be silver, copper, a copper alloy, or a similar nonferrous conductive material. Securing screws and the like may be plated steel. Equipment provided with quick-connect terminals intended for field termination of electrical conductors to the equipment and complying with the Standard for Electrical Quick-Connect Terminals, UL 310, shall be provided with strain relief, and the installation instructions shall include instructions for effecting the strain relief and include reference to the specific connectors to be used.

13.2.1.3 A field-wiring terminal shall be prevented from turning or shifting in position. This may be accomplished by means such as two screws or rivets; by square shoulders or mortices; by a dowel pin, lug, or offset; or by a connecting strap or clip fitted into an adjacent part. Friction between surfaces shall not be used for preventing movement of the terminals.

13.2.2 General application

13.2.2.1 Nonferrous soldering lugs or solderless (pressure) wire connectors shall be used for 8 AWG (8.4 mm^2) and larger wires. If the connectors or lugs are secured to a plate, the plate thickness shall not be less than 0.050 inch (1.27 mm). Securing screws may be plated steel.

13.2.2.2 A wire binding screw intended for connection of the power supply (line voltage) source shall not be smaller than No. 10 (4.8 mm diameter). The screw may be of plated steel.

Exception: A No. 8 (4.2 mm diameter) screw may be used for the connection of one 14 AWG (2.1 mm^2) and one No. 6 (3.5 mm diameter) screw may be used for the connection of one 16 AWG (1.3 mm^2) or smaller conductor.

13.2.2.3 For connection of other than power supply (line voltage) circuits using 10 AWG (5.3 mm^2) and smaller wires, a wire binding screw shall not be smaller than No. 8 (4.2 mm diameter), except that a No. 6 (3.5 mm diameter) screw may be used for the connection of one 14 AWG (2.1 mm^2) or smaller conductor and a No. 4 (2.8 mm diameter) screw may be used for the connection of one 19 AWG (0.65 mm^2) or smaller conductor.

13.2.2.4 Terminal plates tapped for wire binding screws shall:

a) Not have less than two full threads in the metal (the terminal plate metal may be extruded to provide the two full threads) and shall have upturned lugs, clamps, or that which has been determined to be equivalent, to hold the wires in position. Other constructions may be used if they provide equivalent thread security of the wire binding screw. However, two full threads are not required if fewer threads will result in a secure connection in which the threads will not strip with tightening torque in accordance with the values indicated in the Standard for Wire Connectors, UL 486A-486B.

b) Be of a nonferrous metal not less than 0.050 inch (1.27 mm) thick for a No. 8 (4.2 mm diameter) or larger screw, and not less than 0.030 inch (0.76 mm) thick for a No. 6 (3.5 mm diameter) or smaller screw.

13.2.2.5 If two or more conductors are intended to be connected by wrapping under the same screw, a nonferrous intervening metal washer shall be used for each additional conductor. A separator washer is not required if two conductors are separated and intended to be secured under a common clamping plate. If the wires protrude above terminal barriers, the nonferrous separator shall include means, such as upturned tabs or sides, to retain the wire.

AVA Documents
Document Sharing Hub
Full document details: UL 1610 2021

13.2.3 Qualified application

13.2.3.1 Any of the following terminal configurations may be used for connection of field wiring, if they comply with all of the requirements in 13.2.3.2:

a) Push-In Terminals – Nonferrous (screwless) push-in terminals of the type used on some switches and receptacles wherein solid conductors may be pushed into slots containing spring-type retaining contacts. The leads can be removed by means of a tool inserted to relieve the spring tension on the conductor. Push-in terminals may not be used with aluminum conductors. See 100.15.

b) Quick-Connect Terminals – Nonferrous quick-connect (push type) terminals consisting of male posts permanently secured to the device and provided with compatible female connectors for connection to field wiring. Requires special tool for crimping of field wires. Mating terminals shall be shipped with the product with instructions for their installation.

c) Solder Terminals – Conventional nonferrous solder terminals.

Exception: A soldering lug, a push-in terminal, a screwless connector, or a quick-connect or similar friction fit connector shall not be used for the grounding terminal intended for the connection of field supply connections or for the grounding wire in a supply cord. See 14.4.

d) Solderless Wrapped Terminals – Solderless wrapped nonferrous terminals that require a special tool and terminal post design.

e) Telephone Type Terminals – Nonferrous terminal plates using a narrow V-shaped slot for securing of a conductor in a special post design. Requires special tool for wire connection.

f) Other Terminals – Other terminal connections may be used if determined to be equivalent to (a) – (e) and limited to the same restrictions.

13.2.3.2 Any of the terminal configurations listed in 13.2.3.1 may be used for connection of field wiring if the construction complies with all of the following:

a) If a special tool is required for connection, its use shall be indicated on the installation wiring diagram. See 100.4.

b) The range of wire sizes shall be indicated on the installation wiring diagram. The minimum permissible wire size shall not be smaller than 22 AWG (0.32 mm^2).

c) The wire size to be used shall have the current-carrying capacity of the circuit application.

d) The terminal configuration shall comply with the requirements in the Special Terminal Assemblies Tests, Section 52.

Exception: Terminals complying with the requirements in any of the standards specified in 13.2.1.2 (b) – (e) are not required to be subjected to the Special Terminal Assemblies Tests, Section 52.

13.3 Field wiring leads

13.3.1 If leads are provided in lieu of wiring terminals, they shall have a minimum free lead length of 6 inches (152 mm), and shall not be smaller than 22 AWG (0.32 mm^2).

Exception No. 1: A lead may be less than 6 inches long if it is evident that the use of a longer lead may result in damage to the lead insulation or product; may result in a risk of fire, electric shock, or injury to persons; may impair intended operation of the product; or is not required for the intended operation of the product.

AVA Documents
Document Sharing Hub
Full document details: UL 1610 2021

Exception No. 2: Solid copper leads as small as 26 AWG (0.13 mm^2) may be used if:

a) The current does not exceed 1 ampere for lengths up to 2 feet (61 cm) and the current does not exceed 0.4 ampere for lengths up to 10 feet (3.05 m),

b) There are two or more conductors and they are covered by a common jacket or the equivalent,

c) The assembled conductors comply with the requirement in 49.2.1 for strain relief, and

d) The installation instructions are required to indicate that the lead shall not be spliced to a conductor larger than 18 AWG (0.82 mm^2).

13.3.2 Leads intended for connection of a line voltage source shall not be smaller than 18 AWG (0.82 mm^2).

13.3.3 Leads intended for connection to an external circuit shall comply with the strain relief test specified in 49.2.1.

13.4 Polarity identification

13.4.1 In a product intended to be connected to a grounded circuit, one terminal or lead shall be identified for the connection of the grounded conductor. The identified terminal or lead shall be the one connected to the screw shells of lampholders and to which no primary overcurrent-protective devices or other switching devices of the single-pole type are connected.

13.4.2 A terminal intended for the connection of a grounded supply conductor shall be composed of or plated with metal that is substantially white in color and shall be distinguishable from the other terminals, or identification of the terminal shall be clearly shown in some other manner, such as on an attached wiring diagram. A lead intended for the connection of a grounded power-supply conductor shall be finished to show a white or gray color and shall be distinguishable from the other leads.

14 Grounding

14.1 A grounding means shall be provided for all equipment containing parts that require grounding. See Bonding for Grounding, Section 18.

14.2 The following are considered to constitute means for grounding:

a) In a product intended to be permanently connected by a metal-enclosed wiring system, a knockout or equivalent opening in the metal enclosure of the product.

b) In a product intended be permanently connected by a nonmetallic-enclosed wiring system, such as nonmetallic-sheathed cable, an equipment grounding terminal or lead.

c) In a cord-connected product, an equipment grounding conductor in the cord.

14.3 On a permanently-connected product, a terminal intended solely for the connection of an equipment grounding conductor shall be capable of securing a conductor of the size rated for the application in accordance with the National Electrical Code, ANSI/NFPA 70.

14.4 A soldering lug, a push-in terminal, a screwless connector, or a quick-connect or similar friction fit connector shall not be used for the grounding terminal intended for the connection of field supply connections or for the grounding wire in a supply cord.

Documents
Document Sharing Hub
Full document details: UL 1610 2021