UL 1699B

STANDARD FOR SAFETY

Photovoltaic (PV) DC Arc-Fault Circuit Protection

Documents
Document Sharing Hub

Full document details: UL 1699B 2021

Documents
Document Sharing Hub

Full document details: UL 1699B 2021

UL Standard for Safety for Photovoltaic (PV) DC Arc-Fault Circuit Protection, UL 1699B

First Edition, Dated August 22, 2018

SUMMARY OF TOPICS

This revision of ANSI/UL 1699B dated May 18, 2021 includes the following changes in requirements:

– Revision to requirements for the self-testing of circuits; 23.1, 23.2, 23.7, 25.2, 27.2.2, 53.1, 53.2 and 53.7

– Additional set-up figure for the arc-fault detection test; Table 29.1, Figure 29.14, Figure 30.2, Figure 30.3, Figure 30.6B, 30.4.3 and 30.4.4

– Revision for additional single/dual module test configurations; 29.1.1, Table 29.1, Figures 29.7 and 29.8, Figure 29.8A, 29.7.1, Figure 29.17, Figure 29.17A.1 – Figure 29.17A.4, Figure 29.18, 30.1.1 and Figure 30.5A.1 – Figure 30.5A.4

– Clarification of miscellaneous requirements; 29.1.11, 29.1.12, Table 29.3 and Table 30.1

– Revision to annunciation and test methods; 22.1 and 52.1

– Clarification when using array simulators; 24.4, 29.1.3, Table 29.3 and Table 30.1

– Test conditions for single and dual module for electronic devices; Table 29.2

– Clarification for determining most adverse condition and brute force method for series arc-fault detection tests; 29.1.3 and 29.1.4

Text that has been changed in any manner or impacted by UL's electronic publishing system is marked with a vertical line in the margin.

The new and revised requirements are substantially in accordance with Proposal(s) on this subject dated November 27, 2020 and March 12, 2021.

All rights reserved. No part of this publication may be reproduced, stored in a retrieval system, or transmitted in any form by any means, electronic, mechanical photocopying, recording, or otherwise without prior permission of UL.

UL provides this Standard "as is" without warranty of any kind, either expressed or implied, including but not limited to, the implied warranties of merchantability or fitness for any purpose.

In no event will UL be liable for any special, incidental, consequential, indirect or similar damages, including loss of profits, lost savings, loss of data, or any other damages arising out of the use of or the inability to use this Standard, even if UL or an authorized UL representative has been advised of the possibility of such damage. In no event shall UL's liability for any damage ever exceed the price paid for this Standard, regardless of the form of the claim.

Users of the electronic versions of UL's Standards for Safety agree to defend, indemnify, and hold UL harmless from and against any loss, expense, liability, damage, claim, or judgment (including reasonable attorney's fees) resulting from any error or deviation introduced while purchaser is storing an electronic Standard on the purchaser's computer system.

AVA Documents
Document Sharing Hub

Full document details: UL 1699B 2021

No Text on This Page

Documents
Document Sharing Hub

Full document details: UL 1699B 2021

ANSI/UL1699B-2021

UL 1699B

Standard for Photovoltaic (PV) DC Arc-Fault Circuit Protection

First Edition

August 22, 2018

This ANSI/UL Standard for Safety consists of the First Edition including revisions through May 18, 2021.

The most recent designation of ANSI/UL 1699B as an American National Standard (ANSI) occurred on May 18, 2021. ANSI approval for a standard does not include the Cover Page, Transmittal Pages, and Title Page.

Comments or proposals for revisions on any part of the Standard may be submitted to UL at any time. Proposals should be submitted via a Proposal Request in UL's On-Line Collaborative Standards Development System (CSDS) at https://csds.ul.com.

UL's Standards for Safety are copyrighted by UL. Neither a printed nor electronic copy of a Standard should be altered in any way. All of UL's Standards and all copyrights, ownerships, and rights regarding those Standards shall remain the sole and exclusive property of UL.

COPYRIGHT © 2021 UNDERWRITERS LABORATORIES INC.

Documents
Document Sharing Hub

Full document details: UL 1699B 2021

No Text on This Page

Documents
Document Sharing Hub

Full document details: UL 1699B 2021

CONTENTS

PART 1 – ALL DEVICES

INTRODUCTION

1 Scope 7
2 Glossary 7
3 Components 9
4 Units of Measurement 9
5 Undated References 9

CONSTRUCTION

6 General 9
7 Corrosion Protection 9
8 Current Carrying Parts 9
9 Internal Wiring 9
10 Insulation 10
11 Power Supply 10
12 Operating Mechanism 10
13 Programmable Circuit Components 10
14 Electronic Interruption 11
14.1 General 11
14.2 "Off" state or stand-by mode current 11
14.3 Reliability 11
14.4 Programmable circuit components 12

MANUFACTURING AND PRODUCTION LINE TESTS

15 General 12

PART 2 – PV AFCI, PV AFD, AND PV ID DEVICES

CONSTRUCTION

16 General 12
17 Accessibility of Energized Parts 12
18 Spacings 14
19 Terminals 15
19.1 General 15
19.2 Terminal leads 15
19.3 Wire binding screw terminals 15
19.4 Pressure wire terminals 16
20 Enclosure 16
21 Grounding 16
22 Annunciator 16
23 Test Circuits or Methods 17

PERFORMANCE

24 General 17
25 Humidity Conditioning 19

AVA Documents
Document Sharing Hub
Full document details: UL 1699B 2021

26 Leakage Current Measurement 19
27 Voltage Surge Test 21
27.1 General 21
27.2 Unwanted tripping test (Ring wave) 21
27.3 Surge immunity test (Combination wave) 22
28 Environmental Test Sequence 23
29 Arc Fault Detection Tests 25
29.1 General 25
29.2 One string, one MPPT 35
29.3 Two strings combined, one MPPT 36
29.4 Combiner box 37
29.5 External AFCI 38
29.6 DC-DC converter systems 38
29.7 Electronic devices 39
30 Unwanted Tripping Tests 44
30.1 General 44
30.2 Loading condition I – Inverters, converters, and charge controllers 44
30.3 Loading condition II – DC switch operation 53
30.4 Loading condition III – Irradiance step changes 53
31 Normal Temperature Test 54
32 Overvoltage Test 55
33 Overload Test 55
34 Endurance Test 56
35 Dielectric Voltage-Withstand Test 57
36 Abnormal Operations Test 58
37 Short Circuit Current Test 58
38 Corrosion Test 59
39 Surge Current Test 60
39.1 General 60
39.2 Mounting and installation 60
39.3 Surge parameters 60
39.4 Surge polarity 60
40 Abnormal Overvoltage Tests 60
40.1 General 60
40.2 Full phase voltage – high current abnormal overvoltage test 61
40.3 Limited current abnormal overvoltage test 63
41 Supplemental Voltage Surge Immunity Test 64
41.1 General 64
41.2 Surge immunity test (combination wave) 64
42 Resistance to Environmental Noise Test 65
42.1 General 65
42.2 Electrostatic discharge immunity 66
42.3 Radiated electromagnetic field immunity 66
42.4 Electrical fast transient immunity 66
42.5 Voltage surge immunity 66
42.6 Immunity to conducted disturbances, induced by RF fields 67
42.7 Voltage dips, short interruptions and voltage variations immunity 67
43 Strain-Relief Tests 67
43.1 Terminal lead strain-relief test 67
43.2 Power-supply cord strain-relief test 67
44 Mechanical Tests 68
45 Dust Test 68

RATINGS

46 General 68

Documents
Document Sharing Hub
Full document details: UL 1699B 2021

MARKINGS

47 General 69

INSTRUCTIONS

48 Operating and Installation Instructions 70

PART 3 – INVERTERS, CONVERTERS, AND CHARGE CONTROLLERS WITH INTEGRAL PHOTOVOLTAIC DC ARC-FAULT CIRCUIT INTERRUPTER PROTECTION

GENERAL

49 General 70

CONSTRUCTION

50 General 71
51 Alternate Spacings – Clearances and Creepage Distances 71
52 Annunciator 71
53 Test Circuits or Methods 71

PERFORMANCE

54 General 72
55 Voltage Surge Test 73
56 Overvoltage, Overload, Endurance, Abnormal Operations, and Short Circuit Tests 73

MARKINGS

57 General 74

INSTRUCTIONS

58 Operating and Installation Instructions 74

APPENDIX A

Standards for Components 75

APPENDIX B Manufacturing and Production Line Tests

B1 General 77
B2 Manufacturer's Production Line Test Program 77
B3 Manufacturer's Proprietary Inspection Program (PIP) 77

Documents
Document Sharing Hub

Full document details: UL 1699B 2021

No Text on This Page

Documents
Document Sharing Hub

Full document details: UL 1699B 2021

PART 1 – ALL DEVICES

INTRODUCTION

1 Scope

1.1 These requirements cover DC photovoltaic arc-fault circuit protection devices intended for use in solar photovoltaic electrical energy systems as described in Article 690 of the National Electrical Code, NFPA 70. This protection is intended to mitigate the effects of arcing faults that may pose a risk of fire ignition under certain conditions if the arcing persists.

1.2 These requirements cover devices including photovoltaic (PV) dc arc-fault circuit-interrupters (AFCI), arc-fault detectors (AFD), interrupting devices (ID) and inverters, converters, and charge controllers with integral arc-fault circuit-interrupter protection.

1.3 These requirements cover devices rated 1500 volts or less. They are intended for use in dc electrical systems that are supplied by a photovoltaic source, such as a module with solar cells designed to generate dc power when exposed to sunlight.

1.4 These devices are not intended to detect glowing connections.

1.5 In Part 1 of these requirements the term "device" is used generically to apply to all of the devices covered by these requirements and is modified when the requirement does not apply to all types. In Part 2 and Part 3 of these requirements the term "device" is used generically to apply to all devices covered by the particular part of this Standard, and is modified when the requirement does not apply to all types.

1.6 A device that is also intended to perform other functions, such as overcurrent protection, disconnects, combiner boxes, inverters, or other PV system functions or any combination thereof, shall additionally comply with the requirements of the applicable Standard or Standards that cover devices that provide those functions as intended for use in PV systems.

2 Glossary

2.1 For the purposes of this standard the following definitions apply.

2.2 ANNUNCIATOR – A feature of a device that gives an indication upon the functioning of a protective device.

2.3 ARCING – A luminous discharge of electricity across an insulating medium, usually accompanied by the partial volatilization of the electrodes.

2.4 ARCING FAULT – An unintentional arcing condition in a circuit.

2.5 CELL – The basic photovoltaic device that generates electricity when exposed to sunlight.

2.6 CHARGE CONTROLLER – A device intended to control the charging process of storage batteries used in photovoltaic power systems.

2.7 CONVERTER (DC) – A device that accepts dc power input and converts it to another form of dc power.

2.8 DUT – Device under test.

Documents
Document Sharing Hub
Full document details: UL 1699B 2021

2.9 FUNCTIONAL INSULATION – Insulation that is necessary only for the functioning of the equipment.

2.10 INVERTER – An electronic device that changes dc power to ac power.

2.11 INTERRUPTING CONTACT – A contact device inserted in series with the source and/or load. It is intended to stop the flow of arcing current by opening the circuit and may be a mechanical contact set with an air gap or a solid state switching device.

2.12 MICROELECTRONICS – Monolithic, hybrid, or module circuits, where the internal circuit connections are not accessible exclusive of provided external connection pins or pads. The circuits are capable of functioning in the analogue mode, digital mode, or a combination of the two modes. Examples of microelectronics include: ASICs, ROMs, RAMs, PROMs, EPROMs, PALs, and PLDs. See 2.18.

2.13 OPERATION INHIBITION – Denotes the concealment of an arcing fault by the normal operation of certain circuit components.

2.14 PARALLEL ARCING – Arcing that is in parallel with the load, such as between the positive and negative conductors, or between any two conductors or, any single conductor and ground.

2.15 PHOTOVOLTAIC (PV) DC ARC-FAULT CIRCUIT-INTERRUPTER (PV AFCI) – A device that is intended to be installed in a photovoltaic energy system to interrupt power delivered to an arcing fault when an arcing fault is detected by the AFCI. It is intended to provide protection to the PV system from unwanted effects of arcing.

2.16 PHOTOVOLTAIC (PV) DC ARC-FAULT DETECTOR (PV AFD) – A device that is intended to provide protection to the PV system from unwanted effects of arcing by enabling an interruption or shorting device to interrupt power delivered to an arcing fault.

2.17 PHOTOVOLTAIC (PV) DC INTERRUPTING DEVICE (PV ID) – A device that is intended for installation in a photovoltaic energy system to interrupt a detected arcing fault. The device is generally enabled by another device which detects arcing, such an arc-fault detector. The device can perform an interruption or shorting function as appropriate to interrupt power delivered to an arcing fault.

2.18 PROGRAMMABLE COMPONENT – Any microelectronic hardware that can be programmed in the design center, the factory, or in the field. Here the term "programmable" is taken to be "any manner in which one can alter the software wherein the behavior of the component can be altered." The microelectronics defined in 2.12 are examples of programmable components.

2.19 PV MODULE – The smallest environmentally protected assembly of solar cells and ancillary parts, such as interconnects and terminals, intended to generate dc power under sunlight.

2.20 SERIES ARCING – Arcing that is in series with the load and is the result of a failure in the intended continuity of a conductor, connection, module or other system components in the direct current PV source and output circuits.

2.21 SHUNTING CONTACT – A contact device inserted in parallel with the source and/or load. It is intended to stop the flow of arcing current by short circuiting the supply or shunting current around the arcing fault location. It may be a mechanical contact set with an air gap or a solid state switching device.

2.22 TYPE 1 DEVICE – A photovoltaic device that is intended to detect or interrupt series arcing faults.

2.23 UNWANTED TRIP – A tripping function in response to a condition that is not an arcing fault but a condition that occurs as part of the normal or anticipated operation of circuit components.

Documents
Document Sharing Hub
Full document details: UL 1699B 2021

3 Components

3.1 Except as indicated in 3.2, a component of a product covered by this standard shall comply with the requirements for that component. See Appendix A for a list of standards covering components generally used in the products covered by this standard.

3.2 A component is not required to comply with a specific requirement that:

a) Involves a feature or characteristic not required in the application of the component in the product covered by this standard, or

b) Is superseded by a requirement in this standard.

3.3 A component shall be used in accordance with its rating established for the intended conditions of use.

3.4 Specific components are incomplete in construction features or restricted in performance capabilities. Such components are intended for use only under limited conditions, such as certain temperatures not exceeding specified limits, and shall be used only under those specific conditions.

4 Units of Measurement

4.1 Values stated without parentheses are the requirement. Values in parentheses are explanatory or approximate information.

5 Undated References

5.1 Any undated reference to a code or standard appearing in the requirements of this standard shall be interpreted as referring to the latest edition of that code or standard.

CONSTRUCTION

6 General

6.1 All devices shall comply with the construction requirements in Sections 7 – 14 of this standard.

7 Corrosion Protection

7.1 Parts, in addition to enclosures, shall be protected against corrosion if failure of such parts would be likely to result in a hazardous condition such as the inability of the device to perform its intended function. Compliance is determined by the Corrosion Test, Section 38.

8 Current Carrying Parts

8.1 Current-carrying parts shall be of silver, a silver alloy, copper, a copper alloy or other metal acceptable for the application. Screws, nuts, or wire binding screws made of iron or steel and corrosion protected, shall be permitted to be used to secure live parts, but shall not be depended upon to carry current.

9 Internal Wiring

9.1 The gauge and insulation of wires shall withstand the mechanical and electrical stresses of service. Wires smaller than 24 AWG (0.21 mm^2) shall be investigated for the application.

AVA Documents
Document Sharing Hub

Full document details: UL 1699B 2021

10 Insulation

10.1 A device shall have at least functional insulation throughout. Materials shall be suitable for the temperature, voltage and conditions of service.

11 Power Supply

11.1 The power supply of a device shall be a commercial light and power source available in a building, dc power from a photovoltaic source, or both. The power supply shall be capable of allowing the device to function and provide protection at all times when the danger of an arcing fault is present.

11.2 When conducting tests in accordance with Part 2 or Part 3 of this standard, tests applicable to each intended power supply type as mentioned in 11.1 shall be conducted.

12 Operating Mechanism

12.1 Compliance with the provisions of arcing fault interruption shall not be prevented by manipulation or restraint of accessible levers, knobs, and the like of a device.

13 Programmable Circuit Components

13.1 If a device employs a programmable circuit component such as a microprocessor in its arc fault detection or interruption system, or in its test circuits, that portion of the device shall be investigated in accordance with the Standard for Software in Programmable Components, UL 1998, as defined in 13.2 – 13.9. As an alternative to UL 1998 and the requirements as defined in 13.2 – 13.9, the Standard for Automatic Electrical Controls – Part 1: General Requirements, UL 60730-1, Annex H, or Functional Safety of Electrical/Electronic/Programmable Electronic Safety Related Systems, IEC 61508, may be used to evaluate functional safety. IEC 61508 evaluations shall be SIL2 or higher.

13.2 All of the requirements of the Standard for Software in Programmable Components, UL 1998, apply to programmable components employed in a device as mentioned in 13.1, except as modified by 13.3 – 13.9.

13.3 The risks to be considered for the Risk Analysis portion of UL 1998 include the following scenarios:

a) Unwanted tripping;

b) Failure to trip under conditions where tripping should occur; and

c) Failure of a test circuit to complete evaluation.

13.4 The Tool Qualification requirements from UL 1998 are modified in 13.5 and 13.6.

13.5 All tools used in the design, implementation, and verification of software shall be documented. The documentation shall include:

a) The name of the tool supplier or developer;

b) The model, application, or trade name of the tool;

c) The tool version identification;

d) A description of the purpose for which the tool is used; and

e) A list of known errors, faults or failures of the tool performance, such as a "bug list".

Documents
Document Sharing Hub
Full document details: UL 1699B 2021

13.6 Software tools are defined as software or hardware used in the development, testing, analysis, or maintenance of a program or its documentation. Examples include compilers, assemblers, timing analyzers, logic analyzers, test case generators, simulators, emulators, and similar tools.

13.7 Means shall be employed to address all microelectronic hardware failure modes identified in the Risk Analysis of 13.3. The analysis shall consider all possible combinations of microelectronic hardware failures, software faults, and other events that are capable of resulting in a risk. This includes, for example, microelectronic hardware failures that cause software faults that are capable of resulting in a risk. Detection of failure modes shall be at a frequency and adequacy suitable for the application.

13.8 One approach to comply with 13.7 is for the manufacturer to:

a) Identify failure modes;

b) Determine safety impact of failure modes;

c) Design and provide means to detect the failure modes that have an impact on safety;

d) Demonstrate that coverage provided by detection means is at a frequency and effective level suitable for the application; and

e) Provide evidence that the failure rate of microelectronic components is suitable for the application.

13.9 The requirements in UL 1998 addressing user interfaces do not apply.

14 Electronic Interruption

14.1 General

14.1.1 Solid state components used in place of air gap contacts to interrupt or shunt an arc fault shall comply with 14.2 – 14.4 as applicable.

14.2 "Off" state or stand-by mode current

14.2.1 When arcing is interrupted by an interrupting contact using electronic means, the available current with the system in the "off" state or stand-by mode after interruption shall not exceed 250 mA with the DC system at maximum rated voltage.

14.3 Reliability

14.3.1 Except as indicated in 14.3.2, solid-state components that function as an interrupting contact or shunting contact to terminate an arc fault shall be investigated in accordance with the Standard for Tests for Safety-Related Controls Employing Solid-State Devices, UL 991. This UL 991 investigation shall include the failure of any components between the interrupting or shunting components and the product's input and or output wiring connections that may prevent the interrupting or shunting devices from clearing an arc fault.

14.3.2 If degradation and/or failure of these components is detected and indicated by the test circuit, then only the test circuit shall be investigated in accordance with UL 991.

14.3.3 When the Standard for Automatic Electrical Controls – Part 1: General Requirements, UL 60730-1, Annex H, or Functional Safety of Electrical/Electronic/Programmable Electronic Safety Related Systems, IEC 61508, are used as an alternative to UL 1998 in order to determine compliance with the

AVA Documents
Document Sharing Hub
Full document details: UL 1699B 2021

requirements as defined in Programmable Circuit Components, Section 13, these standards may be used to evaluate the hardware requirements of UL 991.

14.4 Programmable circuit components

14.4.1 If a device employs a programmable circuit component such as a microprocessor to implement the test circuit function mentioned above in 14.3.2, that portion of the circuit shall be investigated in accordance with Programmable Circuit Components, Section 13.

MANUFACTURING AND PRODUCTION LINE TESTS

15 General

15.1 Each device shall be subjected to the manufacturing and production-line tests described in Appendix B.

PART 2 – PV AFCI, PV AFD, AND PV ID DEVICES

CONSTRUCTION

16 General

16.1 A PV AFCI, PV AFD, or PV ID device shall comply with the construction requirements of Part 1 of this Standard as well as Sections 17 – 23.

17 Accessibility of Energized Parts

17.1 Parts of a device shall not be accessible when they are installed as intended and energized.

17.2 Parts are considered to be accessible if they can be touched using the articulated probe shown in Figure 17.1.

17.3 Access to the trip mechanism shall not be attainable with ordinary tools.

Documents
Document Sharing Hub
Full document details: UL 1699B 2021

Figure 17.1

Articulated probe

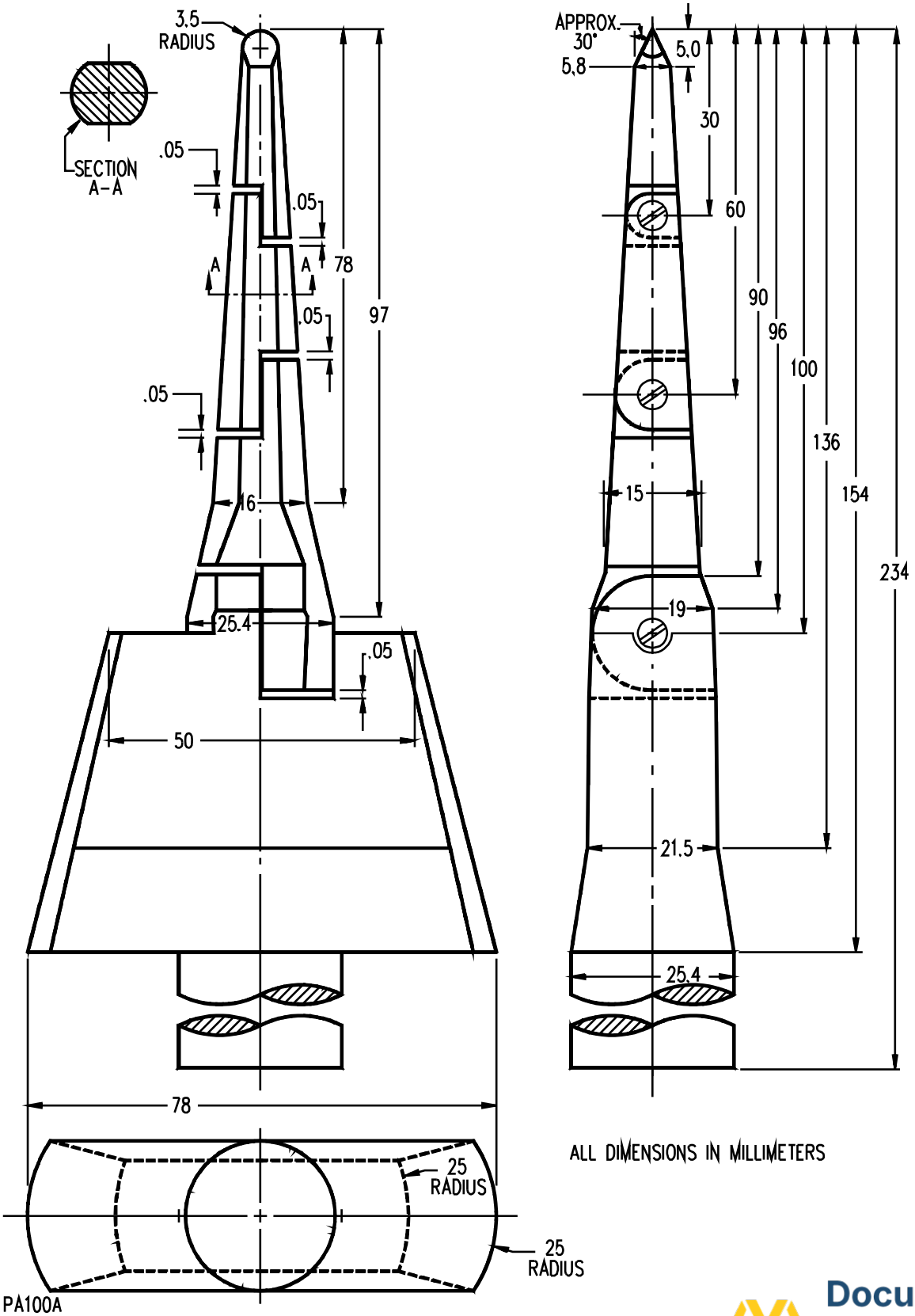

Documents
Document Sharing Hub
Full document details: UL 1699B 2021

18 Spacings

18.1 Except as indicated in 18.2, a device shall comply with the requirements shown in Table 18.1.

Table 18.1
Spacing in mm (inches)[a,b]

Operating potential between parts							
0 – 200 V peak		201 – 400 V peak		401 – 1000 V peak		1001 – 1500 V peak	
Through air	Over surface	Through air	Over surface	Through air	Over surface	Through air	Over surface
3.2 (1/8)	6.4 (1/4)	6.4 (1/4)	9.5 (3/8)	9.5 (3/8)	12.7 (1/2)	17.8 (0.70)	30.5 (1.20)

[a] Smaller spacings may be acceptable where they are inherent in a suitable component.

[b] For printed wiring boards with suitable conformal coating which have been determined to comply with the requirements for conformal coatings in the Standard for Polymeric Materials – Use in Electrical Equipment Evaluations, UL 746C, spacings may be reduced to 0.8 mm (1/32 inch), and may be reduced further if the coating is determined to be suitable and it is evaluated in accordance with UL 746C for the reduced spacing.

18.2 At field-wiring terminals, the spacings between terminals with a potential difference between them shall be not less than 6.4 mm (1/4 inch) for devices rated 200 V and less, not less than 9.5 mm (3/8 inch) for devices rated 201 – 400 V, not less than 12.7 mm (1/2 inch) for devices rated 401 – 1000 V, and not less than 30.5 mm (1.20 inch) for devices rated over 1000V.

18.3 Except as permitted in Note a of Table 18.1, if a groove or a slot in insulating material is less than 0.4 mm (1/64 inch) wide, the contour of the slot or groove is to be disregarded in measuring spacings over the surface.

18.4 Spacings measured along the boundary of insulating materials that have been joined together are considered to be spacings over surface unless it can be shown that the dielectric strength of the boundary is not less than that of any of the materials joined.

18.5 Film-coated magnet wire is considered to be uninsulated in determining spacings.

18.6 As an alternative to the requirements specified in 18.1 – 18.5, the minimum acceptable clearances (through air spacings) and creepage distances (over surface spacings) for a printed wiring board assembly may be evaluated as specified in 18.7 – 18.9 using the applicable requirements in the Standard for Insulation Coordination Including Clearances and Creepage Distances for Electrical Equipment, UL 840.

18.7 When applying the requirements in the Standard for Insulation Coordination Including Clearances and Creepage Distances for Electrical Equipment, UL 840, the environment for a printed wiring board assembly within a device is considered to be:

a) Pollution degree 3 for an assembly without a conformal coating;

b) Pollution degree 2 for:

1) An assembly with a coating,

2) An assembly without a coating when the printed wiring board is contained in a sealed housing that complies with the Dust Test, Section 45, or

c) Pollution degree 1 for an assembly with a conformal coating complying with the Printed Wiring Board Coating Performance Test, in UL 840.

AVA Documents
Document Sharing Hub
Full document details: UL 1699B 2021

18.8 For Clearance B (controlled overvoltage) requirements in the Standard for Insulation Coordination Including Clearances and Creepage Distances for Electrical Equipment, UL 840, the applicable overvoltage category for line-voltage circuits is Category III for PV AFCIs, PV AFDs, and PV IDs. Category I is applicable to low-voltage circuits if short circuit between the parts involved may result in an increase in the risk of fire or electric shock. Any overvoltage protection device needed to achieve these categories shall be provided as an integral part of the device.

18.9 Where measurement of clearances and creepage distances is involved to establish the minimum spacings, the methods specified in Measurement of Clearance and Creepage Distances in the Standard for Insulation Coordination Including Clearances and Creepage Distances for Electrical Equipment, UL 840, shall be used.

18.10 As an alternative to the requirements specified in this Section, Creepage and Clearance requirements may be evaluated in accordance with Tables 13 and 14 of the Standard for Power Converters for use in Photovoltaic Power Systems – Part 1: General Requirements, UL 62109-1.

19 Terminals

19.1 General

19.1.1 A device shall have terminals suitable for the application. Terminals that are intended to be wired in the field shall be in the form of terminal leads, wire binding screws or pressure-wire terminals. The terminals shall comply with 19.2, 19.3, or 19.4 as applicable.

19.1.2 A device may also be evaluated for use with PV wire, or other class and strand configurations as indicated by marking. See 47.9.

19.2 Terminal leads

19.2.1 Terminal leads shall differ by no more than two wire sizes from the size that would have an ampacity in accordance with the National Electrical Code (NEC), ANSI/NFPA 70 for the rating of the device.

19.2.2 The insulation of lead type terminals shall be rated for the application and be of a color that conforms with the requirements of the NEC, that is white or gray for the grounded conductor and green or green with a yellow stripe for the grounding conductor.

19.2.3 The free length of a terminal lead shall be at least 152 mm (6 inches).

19.2.4 A terminal lead shall be constructed so as to withstand the stress of normal handling without damage to itself or the device. See Mechanical Tests, Section 44.

19.3 Wire binding screw terminals

19.3.1 A wire binding screw shall be permitted to be used at a field wiring terminal intended for the connection of a 10 AWG (5.3 mm^2) or smaller wire if upturned lugs or the equivalent are provided to retain the wire under the head of the screw even though the screw becomes loosened.

19.3.2 A screw and washer construction used at a field wiring terminal shall not be smaller than No. 10 (4.8 mm) with no more than 32 threads per inch (25.4 mm). A minimum of two threads shall be engaged.

19.3.3 A terminal plate tapped for a wire binding screw shall be of metal not less than 1.27 mm (0.05 inch) thick and shall have not less than 2 full threads in the metal; except that a plate made of a special

AVA Documents
Document Sharing Hub
Full document details: UL 1699B 2021

alloy not less than 0.76 mm (0.03 inch) thick shall be permitted if the tapped threads have the necessary mechanical strength.

19.3.4 A terminal plate shall be permitted to have the metal extruded at the tapped hole so as to give the thickness necessary for at least 2 full threads provided that the thickness for the unextruded metal is not less than the pitch of the thread.

19.4 Pressure wire terminals

19.4.1 Pressure wire terminals provided with a device shall comply with the Standard for Wire Connectors, UL 486A-486B or the Standard for Equipment Wiring Terminals for Use with Aluminum and/or Copper Conductors, UL 486E.

19.4.2 The tightening torque for a field wiring terminal shall be in accordance with the Standard for Wire Connectors, UL 486A-486B, the Standard for Equipment Wiring Terminals for Use with Aluminum and/or Copper Conductors, UL 486E, or as specified by the device manufacturer and the device shall be marked as required by 50.10. The specified tightening torque shall not be less than 90 percent and not more than 100 percent of the value used in the static heating test as specified in UL 486A-486B or UL 486E, for the wire size corresponding to the ampere rating of the device. See Mechanical Tests, Section 44. Torque values shall be permitted to be less than 90 percent if the connector is investigated in accordance with the lesser assigned torque value.

19.4.3 A pressure wire connector shall be prevented from moving (rotating) so as to strain connections or reduce spacings to unacceptable values.

20 Enclosure

20.1 When a device is provided with its own enclosure, the enclosure shall comply with the requirements in the Standard for Enclosures for Electrical Equipment, Non-Environmental Considerations, UL 50, and the applicable enclosure requirements for the intended environment in the Standard for Enclosures for Electrical Equipment, Environmental Considerations, UL 50E.

21 Grounding

21.1 All accessible parts of a PV AFCI, AFD or ID device that are likely to become energized if there should be arc-over, insulation failure or the like, shall be connected together and to the terminal intended for the equipment grounding conductor.

21.2 A device intended to be connected to multiple power sources, such as a PV power source and a commercial light and power source, shall incorporate terminals or provisions for connecting the equipment grounding conductor from each source.

22 Annunciator

22.1 A PV AFCI or AFD device exceeding the limits of region A as defined in Figure 29.9 shall be provided with an annunciator (local or remote) that provides a visual indication that the device has operated when an arc fault is detected. This indication shall not reset automatically after exceeding the limits defined in 29.1.8.

22.2 It shall be permissible for the indication to be manually reset by remote means.

Documents
Document Sharing Hub
Full document details: UL 1699B 2021

23 Test Circuits or Methods

23.1 A PV AFCI or AFD device shall be provided with a manual or automatic test circuit or method complying with 23.2 – 23.7.

23.2 The arc detection circuit or software shall be tested by simulating an arc or by other means that offer equivalent levels of protection. Equivalent methods or means shall be agreed upon by all concerned parties and documented in the test results. The manual test circuit or method shall allow for periodic testing of the device by manual means that does not require the use of a tool.

23.3 Operation of the manual test circuit shall cause the contacts of the PV AFCI device to open or a PV AFD device to activate its output such that an associated PV ID or other interruption device would open. The results of the test shall be made known to the user by a positive visual indication.

23.4 Failure of a manual or automatic test shall cause the inverter, converter, or charge controller to turn off or go to a stand-by state. The results of the test shall be made known to the user by a positive visual indication. This visual indication is not required when the PV power source is inactive, but must be present when PV power is sufficient to activate the inverter or charge controller in an "off" or stand-by state.

23.5 A device may be provided with a means to actuate the test remotely. If such a feature is provided, then the device shall include a remote visual indication of the results of the test and shall also provide means for remote manual reset.

23.6 An automatic self-test feature shall test the device each time prior to supplying current from the PVDC circuit.

23.7 Any test circuit or method that employs a programmable circuit component shall comply with Section 13, Programmable Circuit Components.

PERFORMANCE

24 General

24.1 A PV AFCI, AFD or ID device shall comply with the applicable performance requirements in Sections 25 – 45, as detailed in Table 24.1.

Table 24.1
Test sequence

Test name	Section	Conditioning / environmental[a]	Overload / endurance[b]	Other[c]
Humidity	25	X		
Leakage[d]	26	X		
Voltage surge[e]	27	X		
Environmental sequence	28	X		
Arc fault detection	29	X		
Unwanted tripping	30			X
Normal Temperature	31			X
Overvoltage[d]	32		X	

Table 24.1 Continued on Next Page

Documents
Document Sharing Hub
Full document details: UL 1699B 2021

Table 24.1 Continued

Test name	Section	Conditioning / environmental[a]	Overload / endurance[b]	Other[c]
Overload	33		X	
Endurance	34		X	
Dielectric voltage withstand	35	X	X	
Abnormal Operations	36			X
Short circuit	37			X
Corrosion	38			X
Surge current[d]	39			X
Abnormal overvoltage[d]	40			X
Supplemental voltage surge[d]	41			X
Resistance to environmental noise	42			X
Electrostatic discharge	42.2			X
Radiated EMI	42.3			X
Fast transients[d]	42.4			X
Voltage surge immunity[d]	42.5			X
Conducted EMI[e]	42.6			X
Voltage dips[d]	42.7			X
Strain relief	43			X
Mechanical	44			X
Dust	45			X

[a] The same representative device shall be subject to the tests in the sequence shown.

[b] A new representative device shall be subject to all of the tests in the sequence shown.

[c] These tests need not be conducted in the sequence shown and may be conducted on new representative devices, except when the dielectric voltage withstand is required as part of another test.

[d] Only applicable to devices with built-in power supplies deriving their power from a commercial light or power source (devices with AC input).

[e] Conducted at the DC input of all devices plus the AC input of devices with built-in power supplies deriving their power from a commercial light or power source (devices with AC input).

24.2 An interrupting device, such as a PV ID, intended for use with a specific detection device, such as a PV AFD, shall be tested in combination with that device as intended.

24.3 When conducting tests in accordance with this Part, tests applicable to each intended power supply type as mentioned in 11.1 shall be conducted.

24.4 For tests requiring a source of PV power, the source shall consist of an array of PV modules connected in a series or series/parallel, or a simulated PV DC power source (or Solar Array/PV Simulator) having characteristics similar to a PV array. Since a simulated PV DC power source may produce unwanted tripping, or may inhibit the PV AFCI from detecting arcing, when deemed necessary, referee tests shall be made using a suitable array of PV modules. When using an actual PV array or Solar Array/PV simulator, the following optional changes can be made according to the values in Table 29.3 and Table 30.1:

a) The impedance of the actual interconnection conductors shall be verified and the values for the Line Impedance model (L4, L5, R3, R4) may be altered to adjust for the measured conductor values. The total impedance shall not exceed the values specified in Table 29.3 and Table 30.1.

b) The DC source resistance (R1, R2) of the decoupling network may be removed.

Documents
Document Sharing Hub
Full document details: UL 1699B 2021

24.5 Where tests are specified to be conducted at maximum power, the PV power source shall be adjusted for its Maximum Power Point (MPP) as follows:

a) The open circuit voltage of the PV supply shall be within 10 percent of the rated voltage of the device being tested but less than the rating of the device, and

b) The total current capability of the PV supplies shall be at least 125 percent of the maximum DC source short circuit current rating of the DUT.

Note: If actual PV modules are used, it may be necessary to parallel two or more strings.

c) Power may be limited by the DC source or the inverter.

25 Humidity Conditioning

25.1 A representative device is to be exposed for 168 hours to air at a relative humidity of 93 ±2 percent at a temperature of 32.0 ±2.0°C (89.6 ±3.6°F). The device is to be exposed to ambient air at a temperature of at least 30°C (86°F) until thermal equilibrium is attained before being placed in the test chamber.

25.2 Following the conditioning, while still in the chamber or within 60 s after removal from the chamber, the representative device shall be connected to an appropriate source of power. Operation of the representative device shall be verified by actuating the test circuit or method.

26 Leakage Current Measurement

26.1 The leakage current of a device with a built-in power supply deriving its power from a commercial light or power source (device with an AC input), shall not be more than 0.5 mA when tested in accordance with 26.2 – 26.6.

26.2 All accessible parts of a device are to be tested for leakage currents. The accessible parts are to be tested individually, collectively, and from one part to another.

26.3 If a surface other than metal is used for the enclosure or part of the enclosure, the leakage current is to be measured using metal foil with an area of 10 by 20 cm in contact with the surface. Where the surface is less than 10 by 20 cm, the metal foil is to be the same size as the surface. The metal foil is not to be pressed into openings and is not to remain in place long enough to affect the temperature of the device.

26.4 The measurement circuit for leakage current of a cord connected device is to be as shown in Figure 26.1 and Figure 26.2. The measurement instrument is defined in (a) – (d) below. The meter that is actually used for a measurement need only indicate the same numerical value for a measurement as would the defined instrument. The meter used need not have all the attributes of the defined instrument.

a) The meter is to have an input impedance of 1500 ohms resistive shunted by a capacitance of 0.15 μF.

b) The meter is to indicate 1.11 times the average of the full-wave rectified composite waveform of voltage across the resistance or current through the resistance.

c) Over a frequency range of 0 – 100 kHz, the measurement circuitry is to have a frequency response (ratio of indicated to actual value of current) that is equal to the ratio of the impedance of a 1500-ohm resistance, shunted by a 0.15-μF capacitance, to 1500 ohms. At an indication of 0.5 mA, the measurement is to have an error of not more than five percent at any frequency within the range of 0 – 100 kHz.

d) Unless the meter is being used to measure leakage from one part of the sample to another, the meter is to be connected between the accessible parts and the grounded supply conductor.

AVA Documents
Document Sharing Hub
Full document details: UL 1699B 2021

Figure 26.1

Leakage-current measurement circuit

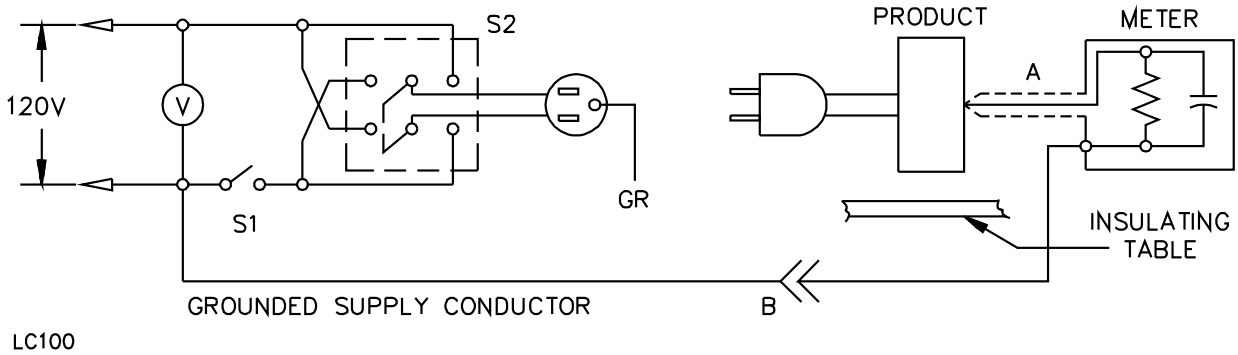

NOTES:

A – Probe with shielded lead.

B – Separated and used as clip when measuring currents from one part of the device to another.

Figure 26.2

Leakage current measurement circuit used for grounded or ungrounded 208 Vrms or 240 Vrms devices intended for connection to 3-wire neutral grounded circuits

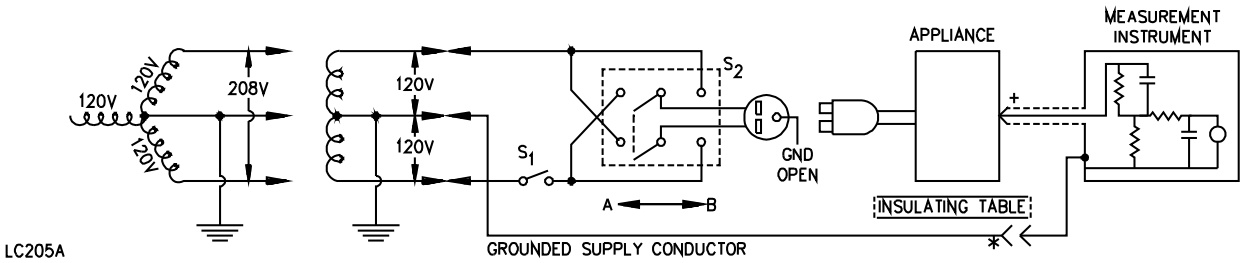

NOTES:

1) * Separated and used as clip when measuring currents from one part of the device to another.

2) + Probe with shielded lead.

3) All voltages shown in Figure 26.2 are nominal.

4) When it is not feasible to isolate the device from ground, the supply circuit shall be isolated from ground. It is possible that it will also be necessary to reverse the leads of the measurement instrument.

AVA Documents
Document Sharing Hub
Full document details: UL 1699B 2021

26.5 An AFCI that is deriving its power from the utility is to be connected to the supply by way of the terminals of the device, and tested in the same manner as a cord connected device except that switches S1 and S2 are not to be employed.

26.6 A representative device is to be tested for leakage current after the conditioning described in Humidity Conditioning, Section 25. If removed from the humidity chamber, the testing is to start within one minute after its removal. The grounding conductor of a cord connected device is to be open at the supply receptacle and the grounding conductor of a permanently connected device unit is not to be used. The supply voltage is to be adjusted to 110 percent of the rated voltage. The test sequence, with reference to the measuring circuit in Figure 26.1, is as follows:

a) With switch S1 open, the device is to be connected to the measurement circuit. The leakage current is to be measured using both positions of switch S2 and with the sample switching devices in all their positions.

b) Switch S1 is then to be closed, energizing the device, and within a period of five seconds, the leakage current is to be measured using both positions of switch S2 and with the control settings varied throughout the operating range.

c) Leakage current is to be monitored at intervals necessary to determine the maximum leakage current, with additional measurements being taken until such time as thermal equilibrium is attained. Both positions of switch S2 are to be used in determining this measurement.

27 Voltage Surge Test

27.1 General

27.1.1 Devices deriving their power from a commercial light or power source shall be subjected to the tests described in 27.2 and 27.3. The surges shall be applied to the AC input of the device.

27.1.2 In addition to the tests of 27.1.1, devices deriving their power from a commercial light or power source shall also be subjected to the tests described in 27.2 and 27.3 with the surges applied to the PV DC input of the device.

27.1.3 Devices deriving their power from a photovoltaic DC source shall be subjected to the tests described in 27.2 and 27.3 with the surges applied to the PV DC input of the device.

27.1.4 When applying the surges to the PV DC input of a device, the following shall apply:

a) Surges shall be applied to the PV DC input of the device with no PV DC power applied.

b) If the device employs a contactor or other air gap device in its DC supply circuitry, it shall be placed in the "on" position or bypassed prior to the application of the surges.

27.2 Unwanted tripping test (Ring wave)

27.2.1 A representative device shall not trip when subjected to the surges described in 27.2.2 – 27.2.5.

Note: For devices deriving their power from a photovoltaic DC source, this is a pre-conditioning test only.

27.2.2 All devices shall still be functional following the application of the ring wave surges. Functionality of a device shall be verified by connecting it to an appropriate power source and actuating the test circuit or method.

AVA Documents
Document Sharing Hub

Full document details: UL 1699B 2021