UL 1727

STANDARD FOR SAFETY

Commercial Electric Personal Grooming Appliances

Documents
Document Sharing Hub

Full document details: UL 1727 2021

Documents
Document Sharing Hub

Full document details: UL 1727 2021

UL Standard for Safety for Commercial Electric Personal Grooming Appliances, UL 1727

Fifth Edition, Dated May 21, 2012

Summary of Topics

This revision of ANSI/UL 1727 dated June 24, 2021 includes the addition of cord tags evaluated to UL 969A; 68.1.1, 79.9.2, 79.9.4, 79.10.2 and 79.10.4.

Text that has been changed in any manner or impacted by UL's electronic publishing system is marked with a vertical line in the margin.

The revised requirements are substantially in accordance with Proposal(s) on this subject dated May 21, 2021.

All rights reserved. No part of this publication may be reproduced, stored in a retrieval system, or transmitted in any form by any means, electronic, mechanical photocopying, recording, or otherwise without prior permission of UL.

UL provides this Standard "as is" without warranty of any kind, either expressed or implied, including but not limited to, the implied warranties of merchantability or fitness for any purpose.

In no event will UL be liable for any special, incidental, consequential, indirect or similar damages, including loss of profits, lost savings, loss of data, or any other damages arising out of the use of or the inability to use this Standard, even if UL or an authorized UL representative has been advised of the possibility of such damage. In no event shall UL's liability for any damage ever exceed the price paid for this Standard, regardless of the form of the claim.

Users of the electronic versions of UL's Standards for Safety agree to defend, indemnify, and hold UL harmless from and against any loss, expense, liability, damage, claim, or judgment (including reasonable attorney's fees) resulting from any error or deviation introduced while purchaser is storing an electronic Standard on the purchaser's computer system.

Documents
Document Sharing Hub

Full document details: UL 1727 2021

No Text on This Page

Documents
Document Sharing Hub

Full document details: UL 1727 2021

MAY 21, 2012
(Title Page Reprinted: June 24, 2021)

ANSI/UL 1727-2021

UL 1727

Standard for Commercial Electric Personal Grooming Appliances

Prior to the first edition, the requirements for the products covered by this standard were included in the Standard for Electric Personal Grooming Appliances, UL 859.

First Edition – May, 1986
Second Edition – October, 1988
Third Edition – March, 1994
Fourth Edition – March, 1999

Fifth Edition

May 21, 2012

This ANSI/UL Standard for Safety consists of the Fifth Edition including revisions through June 24, 2021.

The most recent designation of ANSI/UL 1727 as an American National Standard (ANSI) occurred on June 24, 2021. ANSI approval for a standard does not include the Cover Page, Transmittal Pages, and Title Page.

Comments or proposals for revisions on any part of the Standard may be submitted to UL at any time. Proposals should be submitted via a Proposal Request in UL's On-Line Collaborative Standards Development System (CSDS) at https://csds.ul.com.

UL's Standards for Safety are copyrighted by UL. Neither a printed nor electronic copy of a Standard should be altered in any way. All of UL's Standards and all copyrights, ownerships, and rights regarding those Standards shall remain the sole and exclusive property of UL.

COPYRIGHT © 2021 UNDERWRITERS LABORATORIES INC.

Documents
Document Sharing Hub

Full document details: UL 1727 2021

No Text on This Page

Documents
Document Sharing Hub

Full document details: UL 1727 2021

CONTENTS

INTRODUCTION

1 Scope 7
2 Units of Measurement 7
3 Undated References 7
4 Glossary 7
5 Types of Appliances 14

CONSTRUCTION

6 Components 14
7 Stands 16
8 Hair Dryer Immersion Protection 16
9 Frame and Enclosure 18
9.1 General 18
9.2 Polymeric enclosures and parts 18
9.3 Metal enclosures 19
9.4 Accessibility of live parts 19
9.5 Enclosure integrity 23
9.6 Doors and covers 26
9.7 Hanging and mounting means 26
10 Adhesives Used to Secure Parts 27
11 Reduction of Risk of Injury to Persons 27
11.1 General 27
11.2 Appliances with reservoirs 28
11.3 Wax depilatory appliances 28
12 Protection of Service Personnel 29
13 Mechanical Assembly 30
14 Stability 31
15 Corrosion Resistance 32
16 Supply Connections 32
16.1 Permanently-connected appliances 32
16.2 Field-wiring compartments 33
16.3 Wiring terminals and leads 35
16.4 Cord-connected appliances 37
16.5 Pin terminals 41
16.6 Strain relief 42
16.7 Bushings 43
16.8 Direct plug-in appliances 43
17 Live Parts 45
18 Wetting of Live Parts 46
19 Liquid-Containing Parts 46
20 Internal Wiring 46
20.1 General 46
20.2 Protection of wiring 47
20.3 Splices and connections 47
20.4 Interconnecting cord and cable 49
20.5 Separation of circuits 50
20.6 Barriers 51
20.7 Termination of aluminum conductors 51
21 Heating Element 51
22 Sheathed Heating Element 51
23 Electrical Insulation 52

AVA Documents
Document Sharing Hub
Full document details: UL 1727 2021

23.1 General....52
23.2 Film-coated wire (magnet wire)....52
24 Thermal Insulation....53
25 Overcurrent Protection....53
26 Thermal Cutoffs....54
27 Lampholders and Receptacles....54
28 Light Sources and Associated Components....55
29 Capacitors....55
30 Printed-Wiring Boards....56
31 Switches....57
31.1 General....57
31.2 Dual voltage selector....58
32 Automatic Controls....58
32.1 General....58
32.2 Electromechanical and electronic controls....60
33 Controls – End Product Test Parameters....61
33.1 General....61
33.2 Auxiliary controls....61
33.3 Operating controls (regulating controls)....61
33.4 Protective controls (limiting controls)....62
34 Spacings....64
35 Spacings On Printed Wiring Boards....68
36 Secondary Circuits....68
36.1 General....68
36.2 Connections to frame....70
37 Conformal Coatings....70
38 Grounding....70
38.1 General....70
38.2 Bonding for grounding....71
38.3 Bonding conductor....71
39 Motors....73
39.1 Construction....73
39.2 Brush wear out....73
39.3 Overload protection....73
39.4 Insulation systems....75

PERFORMANCE

40 General....76
41 Ionization Circuits....77
42 Leakage Current Test....77
43 Operational Test....80
44 Starting Current Test....80
45 Power Input Test....81
46 Temperature Test....81
46.1 General....81
46.2 Hair dryers....87
46.3 Motor slowdown test method....90
46.4 Temperature test – motor slowdown....91
46.5 Wax depilatory appliances....91
47 Dielectric Voltage-Withstand Test....91
47.1 Primary circuits....91
47.2 Secondary circuits....93
48 Leakage Current Test Following Humidity Conditioning....93
49 Immersion Protection Trip Time Measurement Test....94
49.1 As-received hair dryers....94

Documents
Document Sharing Hub
Full document details: UL 1727 2021

49.2 Conditioned hair dryers 95
50 Abnormal Operation Test 96
50.1 General 96
50.2 General test conditions 98
50.3 Specific test conditions 99
51 Exposure to Moisture Test 104
52 Flooding of Live Parts Test 104
53 Overflow Test 105
54 Stability Test 106
55 Tip-Over Test 106
56 Strength of Enclosure Test 108
57 Mounting Means Strength Test 108
58 Strain Relief Test 109
59 Torque Test 109
60 Power-Supply Cord Push-Back Relief Test 110
61 Cord Flexing Test 110
62 Test for Security of Swivel Assembly 112
63 Swivel Endurance Test 112
64 Hinge Endurance Test 113
65 Overload Test of Switches and Controls 113
66 Automatic Controls Tests 114
66.1 Overload test 114
66.2 Endurance test 114
67 Grounding Continuity Test 115
68 Test for Permanence of Cord Tag for Hand-Supported, Hair-Drying Appliances 116
68.1 General 116
68.2 Test conditions 116
68.3 Test method 116
69 Permanence of Marking Test 117
70 Extended Operation Test 117
71 Physical Properties of a Liquid Container, Seal, or Diaphragm Test 119
72 Thermoplastic Motor Insulation Systems 121
72.1 General 121
72.2 Abnormal conditioning 122
72.3 Overload-burnout conditioning 122
72.4 Thermal aging 122
73 Flammability Test – Wax for Depilatory Appliances 124
74 Ozone Test 124

MANUFACTURING AND PRODUCTION TESTS

75 Dielectric Voltage-Withstand Test 124
76 Grounding Continuity Test 127
76.1 Continuity of grounding connection 127
76.2 Electrical indicating device 127
77 Hair Dryer Power Input Test 127

RATINGS

78 Details 127

MARKINGS

79 Details 128
79.1 General 128

AVA Documents
Document Sharing Hub
Full document details: UL 1727 2021

79.2 Permanently-connected appliances 129
79.3 Ungrounded dead-metal parts 130
79.4 Fuse replacement 130
79.5 Fuse marking 131
79.6 Automatic starting 131
79.7 Double insulation 131
79.8 Body- or table-supported hood- or bonnet-type hair dryers 131
79.9 Hand-supported, hair-drying appliances 131
79.10 Permanently-installed, wall-mounted hair dryers 133
79.11 Curling irons 135
79.12 Dual-voltage appliances 136
79.13 Appliances with GFCIs, or similar protective devices 136
79.14 Wax depilatory appliances 136

INSTRUCTION MANUALS

80 General 137
81 Instructions Pertaining to a Risk of Fire, Electric Shock, or Injury to Persons 137
82 Installation Instructions 144
83 Operating Instructions 144
84 User-Maintenance Instructions 145

SUPPLEMENT SA – WALL-HUNG HAIR DRYERS

SA1 Scope 147
SA2 General 147
SA3 Construction 147
SA4 Performance 147
SA5 Marking 148
SA6 Use and Care Instructions 148
SA7 Installation Instructions 148

Documents
Document Sharing Hub
Full document details: UL 1727 2021

INTRODUCTION

1 Scope

1.1 These requirements cover electric personal grooming appliances intended for use by qualified personnel in commercial establishments such as beauty parlors, barber shops, or cosmetic studios. These appliances include hair curlers and dryers, combs, brushes, and similar appliances that are to be employed in accordance with the National Electrical Code, ANSI/NFPA 70.

1.2 These requirements do not cover therapeutic lamps, diathermy equipment, massage machines, vibrators, hair clippers, shavers, facial caps, masks, mitts, or other appliances covered by other requirements such as in the Standard for Medical Electrical Equipment, Part 1: General Requirements for Safety, UL 60601-1. These requirements also do not cover hair curlers or dryers rated at more than 250 volts.

2 Units of Measurement

2.1 Values stated without parentheses are the requirement. Values in parentheses are explanatory or approximate information.

2.2 Unless otherwise indicated, all voltage and current values mentioned in this standard are root-mean-square (rms).

3 Undated References

3.1 Any undated reference to a code or standard appearing in the requirements of this standard shall be interpreted as referring to the latest edition of that code or standard.

4 Glossary

4.1 For the purpose of this standard the following definitions apply.

4.2 APPLIANCE COUPLER – A single-outlet, female contact device for attachment to a flexible cord as part of a detachable power-supply cord to be connected to an appliance inlet (motor attachment plug).

4.3 APPLIANCE INLET (MOTOR ATTACHMENT PLUG) – A male contact device mounted on an end product appliance to provide an integral blade configuration for the connection of an appliance coupler or cord connector.

4.4 APPLIANCE (FLATIRON) PLUG – An appliance coupler type of device having a cord guard and a slot configuration specified for use with heating or cooking appliances.

4.5 AUTOMATIC CONTROL – A device intended for automatic control of operating time, temperature, or pressure under conditions of intended operation and not for protection against conditions resulting from abnormal operations.

4.6 AUTOMATICALLY CONTROLLED APPLIANCE – An appliance is considered to be automatically controlled if it complies with one or more of the following conditions:

a) The repeated starting of the appliance is independent of any manual control if, after one complete cycle of operation, a limit device or similar device opens the circuit.

b) During any single preset cycle of operation, the motor is caused to stop and restart.

Documents
Document Sharing Hub
Full document details: UL 1727 2021

c) When the appliance is energized, the initial starting of the motor may be intentionally delayed beyond intended, conventional starting.

d) For an appliance employing a motor with a separate starting winding, during any single predetermined cycle of operation automatic changing of the mechanical load reduces the motor speed sufficiently to re-establish starting-winding connections to the supply circuit.

4.7 BODY-SUPPORTED APPLIANCE – An appliance that is physically supported by any part of the body, other than the hand of the user, during the performance of its intended electrically operated functions (such as a shoulder-, body-, or head-supported hair dryer) is to be considered a body-supported appliance. Reference is to be made to the user manual of the appliance in establishing the intended electrically operated functions of the appliance.

4.8 CONTINUOUS-DUTY MOTOR – A motor that can operate unattended and under load under any normal conditions of use for 3 hours or more.

4.9 CONTROL, AUTOMATIC ACTION – A control in which at least one aspect is non-manual.

4.10 CONTROL, AUXILIARY – A device or assembly of devices that provides a functional utility, is not relied upon as an operational or protective control, and therefore is not relied upon for safety. For example, an efficiency control not relied upon to reduce the risk of electric shock, fire, or injury to persons during normal or abnormal operation of the end product is considered an auxiliary control.

4.11 CONTROL, MANUAL – A device that requires direct human interaction to activate or reset the control.

4.12 CONTROL, OPERATING – A device or assembly of devices, the operation of which starts or regulates the end product during normal operation. For example, a thermostat, the failure of which a thermal cutout/limiter or another layer of protection would reduce the risk of electric shock, fire, or injury to persons, is considered an operating control.

4.13 CONTROL, PROTECTIVE – A device or assembly of devices, the operation of which is intended to reduce the risk of electric shock, fire or injury to persons during reasonably anticipated abnormal operation of the appliance. For example, a thermal cutout/limiter, or any other control/circuit relied upon for normal and abnormal conditions, is considered a protective control. Protective controls are also referred to as “limiting controls” and “safety controls.”

Note – During the testing of the protective control/circuit, the protective functions are verified under normal and single-fault conditions of the control.

4.14 CONTROL, TYPE 1 ACTION – The actuation of an automatic control for which the manufacturing deviation and the drift (tolerance before and after certain conditions) of its operating value, operating time, or operating sequence has not been declared and tested under this standard.

4.15 CONTROL, TYPE 2 ACTION – The actuation of an automatic control for which the manufacturing deviation and the drift (tolerance before and after certain conditions) of its operating value, operating time, or operating sequence have been declared and tested under this standard.

4.16 CORD CONNECTOR – A female contact device wired on flexible cord for use as an extension from an outlet to make a detachable electrical connection to an attachment plug or, as an appliance coupler, to an equipment inlet.

4.17 COUNTER-SUPPORTED APPLIANCE – An appliance that is physically supported by a counter, table, or bench during the performance of its intended electrically operated functions (such as a hair curler

AVA Documents
Document Sharing Hub
Full document details: UL 1727 2021

heater) is considered a counter-supported appliance. Reference is to be made to the user manual of the appliance in establishing the intended electrically operated functions of the appliance.

4.18 DEAD-METAL PART – A metal or other electrically conductive part, accessible or inaccessible, that is not conductively connected to a live part.

4.19 DIRECT PLUG-IN APPLIANCE – An appliance, without a power supply cord, that is physically supported by direct insertion of its integral blades into a receptacle is considered a direct plug-in appliance.

4.20 DIRECTLY ACCESSIBLE MOTOR – A motor that:

a) Can be contacted without opening or removing any part of an enclosure or guard or

b) Is located so as to be accessible to contact.

4.21 DUAL-VOLTAGE APPLIANCE – An appliance rated for use on a supply circuit of either of two different voltages (for example, 120 volts and 240 volts) and usually provided with a means to change from one voltage to the other.

4.22 FIXED APPLIANCE – An appliance intended to be permanently connected electrically.

4.23 FLOOR-SUPPORTED APPLIANCE – An appliance that is physically supported by the floor during the performance of its intended electrically operated functions (such as hair dryers with roll-about stands) is considered a floor-supported appliance. Reference is to be made to the user manual of the appliance in establishing the intended electrically operated functions of the appliance.

4.24 HAIR-CRIMPING IRON – A hand-supported hair curling appliance having hinged arms and ridged or wavy surfaced electrically heated tongs between which hair is curled. A typical construction is shown in Figure 4.1.

Documents
Document Sharing Hub

Full document details: UL 1727 2021

Figure 4.1

Typical hair-crimping iron

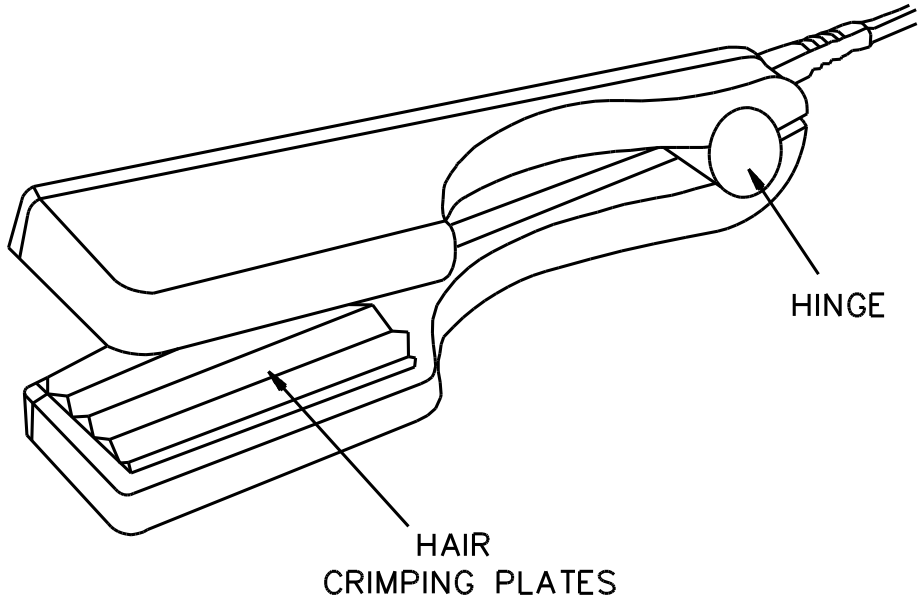

S3516

4.25 HAIR CURLER HEATER (HAIR SETTER) – A counter-supported appliance having posts or wells on or in which hair curling devices (rollers and the like) are heated before being applied to the hair. The term also applies to a construction that has individual electrical hair curlers (rollers) with built-in heating elements and male electrical fittings which plug into female contacts in the appliance.

4.26 HAIR-STRAIGHTENING IRON – An appliance similar to a hair-crimping iron as described in 4.24 except that the hair-crimping plates are replaced with flat plates.

4.27 HAND-HELD APPLIANCE, HAND-GUIDED APPLIANCE – A portable appliance that during intended use is contacted by the hand of the user for purposes of electrical or physical control but not for complete support.

4.28 HAND-SUPPORTED APPLIANCE – An appliance that is physically supported by the hand of the user during the performance of its intended functions (such as a curling iron) is considered a hand-supported appliance. Reference is to be made to the user manual of the appliance in establishing the intended electrically operated functions of the appliance.

4.29 HEATED-AIR CURLING IRON (or BRUSH) – A curling iron (or brush) in which a fan included in the appliance blows air over the heating elements and out through openings in the barrel of the appliance.

4.30 HIGH-VOLTAGE CIRCUIT – A circuit involving a potential of more than 600 volts.

4.31 INDIRECTLY ACCESSIBLE MOTOR – A motor that is accessible only by opening or removing a part of the outer enclosure, such as a guard or panel, that can be opened or removed without using a tool, or a motor that is located or otherwise guarded or enclosed so that it is unlikely to be contacted

AVA Documents
Document Sharing Hub
Full document details: UL 1727 2021

4.32 INPUT VOLTAGE SELECTOR – The means provided on an appliance to adjust for the available input voltage.

4.33 INTERLOCK – A device that automatically de-energizes electrical components or stops moving parts that become exposed when an enclosure is opened or when a cover is removed.

4.34 ISOLATING TRANSFORMER – A transformer of which one or more output windings is electrically separated from the input winding.

4.35 LIMIT CONTROL – As applicable to hand-supported hair dryers, a limit control, as shown in note A of Figure 4.2, is a non-resettable control (a control intended to operate only once; that is, the control is not intended to be nor can it be reset or reconditioned for reuse) that operates to open all electrical circuits to reduce the risk of fire or electric shock.

Documents
Document Sharing Hub
Full document details: UL 1727 2021

Figure 4.2

Typical hair dryer circuit

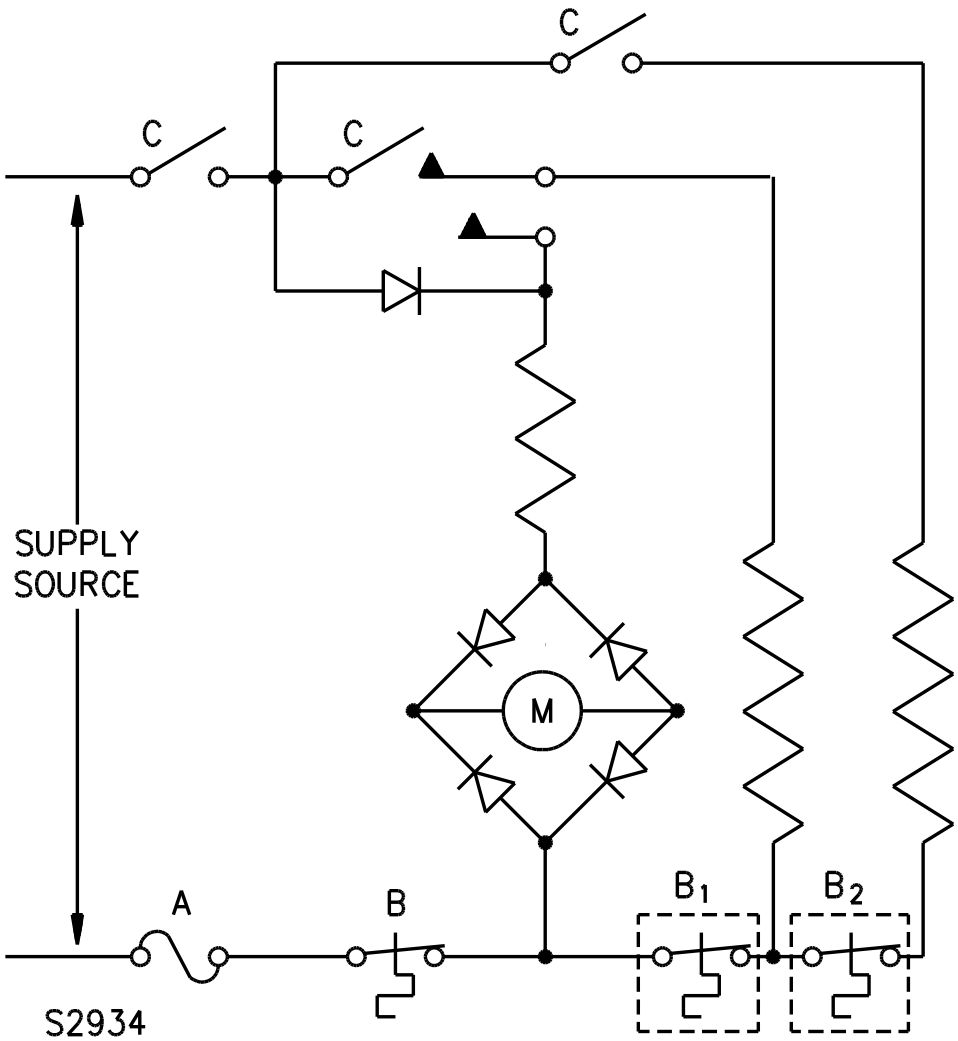

A – Limit control (a non-resettable device, as defined in 4.35).

B – Temperature control (a calibrated automatic-reset device, as defined in 4.47). See also 46.1.23 and 46.1.24.

B_1, B_2 – Temperature control (a calibrated automatic-reset device, as defined in 4.47) shown at two other locations. See also 46.1.23 and 46.1.24.

C – Switches.

M – Motor.

Documents
Document Sharing Hub
Full document details: UL 1727 2021

4.36 LIMITED-ENERGY PRIMARY CIRCUIT – A line-voltage circuit that incorporates a limiting impedance in series with the supply circuit so that:

a) The circuit potential on the load side of the limiting impedance does not exceed 42.4 volts peak (30 volts rms), under intended conditions and

b) The maximum energy available at the load side of the limiting impedance circuit is 100 volt-amperes under any condition, including abnormal operation.

4.37 LINE-VOLTAGE CIRCUIT – A circuit involving a potential of no more than 250 volts and having circuit characteristics in excess of those of a low-voltage circuit or a limited-energy primary circuit.

4.38 LIVE PART – A part energized with respect to earth or to some other part.

4.39 LOW-VOLTAGE CIRCUIT – A circuit supplied by a primary battery, by a Class 2 transformer, or by a combination of a transformer and fixed impedance that, as a unit, complies with all performance requirements for Class 2 transformers and that does not involve an open circuit potential of more than 42.4 volts peak (30 volts rms).

4.40 ORDINARY TOOL – A flat blade or Phillips head screwdriver, wrench, pliers, or other simple tool that is readily available.

4.41 PORTABLE APPLIANCE – An appliance capable of being carried or conveyed.

4.42 PREHEAT CYCLE – A cycle of operation in which the heating element initially operates at a higher wattage for a predetermined length of time at the end of which the wattage drops to a lower continuous operation level. The preheat cycle may or may not be repeated during a use of the appliance. The temperature transient condition associated with the operation of a positive temperature coefficient (PTC) heating element is not considered to be a preheat cycle.

4.43 REMOTELY-CONTROLLED APPLIANCE – An appliance that is out of view of the operator at the starting device.

4.44 SAFETY CIRCUIT – Any circuit, either in the primary or secondary, that is relied upon to reduce the risk of fire, electric shock, or injury to persons; for example, an interlock circuit is considered a safety circuit.

4.45 SECONDARY CIRCUITS – Circuits supplied from the secondary windings of isolating transformers. See 36.1.1 – 36.2.2.

4.46 STATIONARY APPLIANCE – A cord-connected appliance that is intended to be fastened in place or located in a dedicated space.

4.47 TEMPERATURE CONTROL – As applicable to hand-supported hair dryers, a temperature control, as shown in note B of Figure 4.2, is an automatic-reset temperature-sensing control that operates to open an electrical circuit to limit temperatures during motor slowdown and abnormal operation. A temperature control is a calibrated control that is intended for at least 6000 cycles of operation and that complies with all other requirements in the Standard for Limit Controls, UL 353, or in the Standard for Temperature-Indicating and -Regulating Equipment, UL 873 or in the Standard for Automatic Electrical Controls for Household and Similar Use, Part 1: General Requirements, UL 60730-1, and the Standard for Automatic Electrical Controls for Household and Similar Use, Part 2: Particular Requirements for Temperature Sensing Controls, UL 60730-2-9.

Documents
Document Sharing Hub
Full document details: UL 1727 2021

4.37 TEMPERATURE-LIMITING CONTROL – A control that functions only under conditions that produce temperatures higher than intended. The breakdown of the control might or might not result in a risk of fire, electric shock, or injury to persons.

4.49 TEMPERATURE-REGULATING AND -LIMITING CONTROL – A combination control that functions to regulate the temperature of the appliance under conditions of intended use, and also serves to reduce the risk of electric shock or injury to persons that might result from higher than intended temperatures.

4.50 TEMPERATURE-REGULATING CONTROL – A control that functions only to regulate the temperature under conditions of intended use. The breakdown of the control would not result in a risk of fire, electric shock, or injury to persons.

4.51 THERMAL CUTOFF – A temperature or temperature- and current-sensitive device incorporating a thermal element for protecting a circuit by opening the protected circuit when the device reaches a predetermined temperature. It is intended to reduce the risk of fire, electric shock, or injury to persons due to overheating of an appliance during abnormal operation and to operate only once, that is, it cannot be reset or reconditioned for reuse.

4.52 WALL-HUNG APPLIANCE – A cord-connected appliance that is provided with concealed (see 9.7.2) keyhole slots, hanger holes, or the like in order to be hung on a wall and that does not require the use of tools for removal from the wall. A wall-hung appliance may consist of two interconnected units where one is intended to hang on a wall and the other is intended to be supported by hand during use.

4.53 WALL-MOUNTED APPLIANCE – An appliance that is permanently attached to a wall surface, and connected electrically.

4.54 WIRING TERMINAL – A terminal to which power supply or control connections are to be made in the field when the appliance is installed.

5 Types of Appliances

5.1 In the following text, a requirement that applies only to a specific type or types of appliances, such as a hand-supported hair dryer and a curling iron, is so identified by specific reference in that requirement to the type or types involved. Absence of such specific reference or use of the term "appliance" indicates that the requirement applies to all appliances covered by this standard.

5.2 An appliance that is a combination of two or more types (for example, an appliance having a hand-supported part and a counter-supported part) or an appliance that fits the definition of two or more types (for example, an appliance that can be used while supported by hand or while supported by countertop) is investigated in accordance with the applicable requirements for the types of appliances involved. If two requirements that address the same condition differ, the appliance is investigated to the more severe requirement.

CONSTRUCTION

6 Components

6.1 A component of a product covered by this standard shall:

a) Comply with the requirements for that component as indicated in the individual section(s) covering that component;

b) Be used in accordance with its rating(s) established for the intended conditions of use;

AVA Documents
Document Sharing Hub
Full document details: UL 1727 2021

c) Be used within its established use limitations or conditions of acceptability;

d) Additionally comply with the applicable requirements of this standard; and

e) Not contain mercury, unless used within a fluorescent, high intensity discharge, or neon lamp bulb.

Exception No. 1: A component of a product covered by this standard is not required to comply with a specific component requirement that:

a) Involves a feature or characteristic not required in the application of the component in the product;

b) Is superseded by a requirement in this standard; or

c) Is separately investigated when forming part of another component, provided the component is used within its established ratings and limitations.

Exception No. 2: A component complying with a component standard other than those cited in this standard is acceptable if:

a) The component also complies with the applicable component standard indicated in this standard or

b) The component standard:

1) Is compatible with the ampacity and overcurrent protection requirements of the National Electrical Code, ANSI/NFPA 70, where appropriate;

2) Considers long-term thermal properties of polymeric insulating materials in accordance with the Standard for Polymeric Materials – Long Term Property Evaluations, UL 746B; and

3) Any use limitations of the other component standard is identified and appropriately accommodated in the end use application. For example, a component used in a household application, but intended for industrial use and complying with the relevant component standard may assume user expertise not common in household applications.

6.2 Specific components are incomplete in construction features or restricted in performance capabilities. Such components are intended for use only under limited conditions, such as certain temperatures not exceeding specified limits, and shall be used only under those specific conditions.

6.3 A component that is also intended to perform other functions, such as:

a) Overcurrent protection;

b) Ground-fault circuit-interruption;

c) Surge suppression;

d) Any other similar functions; or

e) Any combination thereof

shall comply additionally with the requirements of the applicable UL standard(s) that cover devices that provide those functions.

Documents
Document Sharing Hub

Full document details: UL 1727 2021

Exception: Where these other functions are not required for the application and not identified as part of markings, instructions, or packaging for the appliance, the additional component standard(s) need not be applied.

6.4 A component not anticipated by the requirements of this standard, not specifically covered by the component standards noted in this Standard, and that involves a risk of fire, electric shock, or injury to persons, shall be additionally investigated in accordance with the applicable UL standard, and shall comply with 6.1 (b) – (e).

6.5 With regard to a component being additionally investigated, reference to construction and performance requirements in another UL end product standard is suitable where that standard anticipates normal and abnormal use conditions consistent with the application of this standard.

7 Stands

7.1 An appliance such as a curling iron that can be placed on combustible material shall be provided with a stand made of material resistant to combustion, upon which the curling iron can be placed when not in use.

Exception No. 1: A stand is not required to be provided if the temperature attained on any external surface of the appliance that is likely to contact the supporting surface is not higher than 90°C (194°F).

Exception No. 2: A hand-supported hair dryer is not required to be provided with a stand.

7.2 If an appliance as described in 7.1 attains a temperature higher than 100°C (212°F) on an external surface that is likely to contact the supporting surface when operated continuously, it shall be provided with an integral stand. A stand provided for other types of appliances may be provided either as a separate device or integral with the appliance.

7.3 With respect to 7.2, an integral stand provided with an appliance shall be of such construction or shape that any surface of the appliance exceeding 150°C (302°F) does not contact the supporting surface when the appliance is supported by the stand in the intended manner.

7.4 A polymeric material employed as an integral stand in compliance with the requirements in 7.3 shall be rated for the temperature to which it will be subjected during use.

7.5 A heated-air curling iron or brush, as defined in 4.29, shall comply with the requirements applicable to hand-supported hair dryers and curling irons.

8 Hair Dryer Immersion Protection

8.1 A hand-supported, hair-drying appliance (such as a hair dryer, blower-styler, styler-dryer, heated-air comb, heated-air hair curler, curling iron/hair dryer combination, a wall-hung hair dryer or the hand unit of a wall-mounted hair dryer, or a similar appliance) shall be constructed to reduce the risk of electric shock when the appliance is energized with its power switch in either the "on" or "off" position and the unit is immersed in water having an electrically conductive path to ground.

8.2 With reference to 8.1, compliance may be accomplished with the use of an integral ground-fault circuit interrupter (GFCI) or an integral protective device of another type that de-energizes all current-carrying parts when the hand-supported, hair-drying appliance is immersed in water having an electrically conductive path to ground (hereafter referred to as a protective device).

Documents
Document Sharing Hub
Full document details: UL 1727 2021

8.3 When a hand-supported, hair-drying appliance is provided with a GFCI, the GFCI shall comply with the requirements for Class A cord-connected GFCIs in the Standard for Ground-Fault Circuit-Interrupters, UL 943.

Exception: A GFCI located in the wall unit of a wall-mounted, permanently-connected hair dryer shall comply with the requirements for Class A, permanently-connected GFCIs in UL 943.

8.4 If a hand-supported, hair-drying appliance is provided with a protective device other than a GFCI, the protective device shall be acceptable for the application. Investigation of the protective device shall include and is not required to be limited to consideration of:

a) Electrical rating,

b) Operating temperatures,

c) Reliability of operation,

d) Resistance to the effects of abnormal operating conditions,

e) Resistance to mechanical abuse,

f) Resistance to electrical transients, and

g) Resistance to moisture.

The combination of hair-drying appliance and protective device shall comply with the test described in the Immersion Protection Trip Time Measurement Test, Section 49.

Exception No. 1: A protective device is deemed acceptable for the application if it complies with the requirements for Class A cord-connected GFCIs in the Standard for Ground-Fault Circuit-Interrupters, UL 943, except that it is not required to:

a) Have a grounding conductor;

b) Have the same type of power supply cord;

c) Comply with the high-resistance ground faults test under the condition that any power conductor is open-circuited; or

d) Provide grounded neutral protection by compliance with the high-resistance ground faults test, under the test condition that the neutral conductor is grounded at a point in the load circuit.

Exception No. 2: A protective device is deemed acceptable for the application if it complies with the requirements in the Standard for Appliance Leakage-Current Interrupters, UL 943B. The combination of a hand-supported, hair-drying appliance and such a protective device is not required to be subjected to the test described in the Immersion Protection Trip Time Measurement Test, Section 49.

8.5 A GFCI or other protective device shall be integral with the attachment plug of the hand-supported, hair-drying appliance power supply cord.

Exception No. 1: For a wall-mounted, permanently-connected hair dryer, the GFCI or other protective device may be located in the wall unit.

Exception No. 2: A GFCI or other protective device may be located in the power supply cord as a through cord construction or in the hair dryer enclosure after additional investigations with regard to acceptability after immersion, resistance to mechanical abuse, and the like.

Documents
Document Sharing Hub
Full document details: UL 1727 2021

8.6 A user-resettable protective device shall incorporate a supervisory circuit as described in the Standard for Ground-Fault Circuit-Interrupters, UL 943, for GFCIs.

Exception: A user-resettable protective device may be provided with a reset feature not providing a test function if:

a) The protective device complies with the Standard for Tests for Safety-Related Controls Employing Solid-State Devices, UL 991. If the computational investigation is conducted, the maximum predicted failure rate (Δp) shall not exceed 1.5 failures per million hours predicted. If the demonstrated method is conducted, the test acceleration multiplier shall be 5763;

b) The instructions provided with the appliance alert the user to the reset feature and how and when to use it; and

c) The instructions provided with the appliance alert the user to not reset and reuse the appliance should the protective device trip as a result of immersion.

8.7 A switch included for testing a user-resettable protective device shall be permanently marked "Test" and "Reset" on or adjacent to the switch actuators.

8.8 After a protective device de-energizes current-carrying parts, it shall not automatically reset.

9 Frame and Enclosure

9.1 General

9.1.1 The frame and enclosure of an appliance shall be sufficiently strong and rigid to resist the abuses likely to be encountered during service. The degree of resistance inherent in the appliance shall preclude total or partial collapse with the attendant reduction of spacings, loosening or displacement of parts, and other conditions which alone or in combination constitute an increase in the risk of fire, electric shock, or injury to persons.

9.1.2 Among the factors taken into consideration in evaluating an enclosure for acceptability are its:

a) Physical strength;

b) Resistance to impact;

c) Moisture-absorptive properties;

d) Combustibility;

e) Resistance to corrosion; and

f) Resistance to distortion at temperatures to which the enclosure may be subjected under conditions of normal or abnormal use.

For a nonmetallic enclosure, all these factors are considered with regard to thermal aging.

9.2 Polymeric enclosures and parts

9.2.1 A polymeric enclosure shall comply with the applicable requirements in the Standard for Polymeric Materials – Use in Electrical Equipment Evaluations, UL 746C. A direct plug-in appliance shall comply with the requirements for unattended portable appliances in UL 746C.

Documents
Document Sharing Hub
Full document details: UL 1727 2021

9.2.2 A enclosure or part relied upon for compliance with this standard, when fabricated from polymeric materials, shall have clear traceability as to composition, ingredients, and processing for the fabricated part to the extent that the composition, ingredients, or process impacts the compliance of the product. Fabricated parts complying with the Standard for Polymeric Materials – Fabricated Parts, UL 746D meets this requirement.

9.3 Metal enclosures

9.3.1 The minimum thickness of a metal enclosure shall be as indicated in Table 9.1.

Table 9.1
Minimum thickness of enclosure metal

Metal	At small, flat, unreinforced surfaces and at surfaces that are reinforced by curving, ribbing, and the like (or are otherwise of a shape or size) to ensure adequate physical strength,		At surfaces to which a wiring system is to be connected in the field,		At relatively large unreinforced flat surface,	
	inch	(mm)	inch	(mm)	inch	(mm)
Die-cast	3/64	(1.2)	–	–	5/64	(2.0)
Cast malleable iron	1/16	(1.6)	–	–	3/32	(2.4)
Other cast metal	3/32	(2.4)	–	–	1/8	(3.2)
Uncoated sheet steel	0.026[a]	(0.66)	0.032	(0.81)	0.026	(0.66)
Galvanized sheet steel	0.029[a]	(0.74)	0.034	(0.86)	0.029	(0.74)
Nonferrous sheet metal	0.036[a]	(0.91)	0.045	(1.14)	0.036	(0.91)

[a] Thinner sheet metal may be used if found to be acceptable when the enclosure is judged under considerations such as those mentioned in 9.1.2.

9.4 Accessibility of live parts

9.4.1 To reduce the risk of unintentional contact that may involve a risk of electric shock from an uninsulated live part or film-coated wire, an opening in an enclosure shall comply with either (a) or (b).

a) For an opening that has a minor dimension (see 9.4.5) less than 1 inch (25.4 mm), such a part or wire shall not be contacted by the probe illustrated in Figure 9.1.

b) For an opening that has a minor dimension of 1 inch or more, such a part or wire shall be spaced from the opening as specified in Table 9.2.

Exception: A motor other than one used in either a hand-supported appliance or a hand-supported portion of an appliance is not required to comply with these requirements if it complies with the requirements in 9.4.2.

Documents
Document Sharing Hub
Full document details: UL 1727 2021

Figure 9.1

Articulated probe with web stop

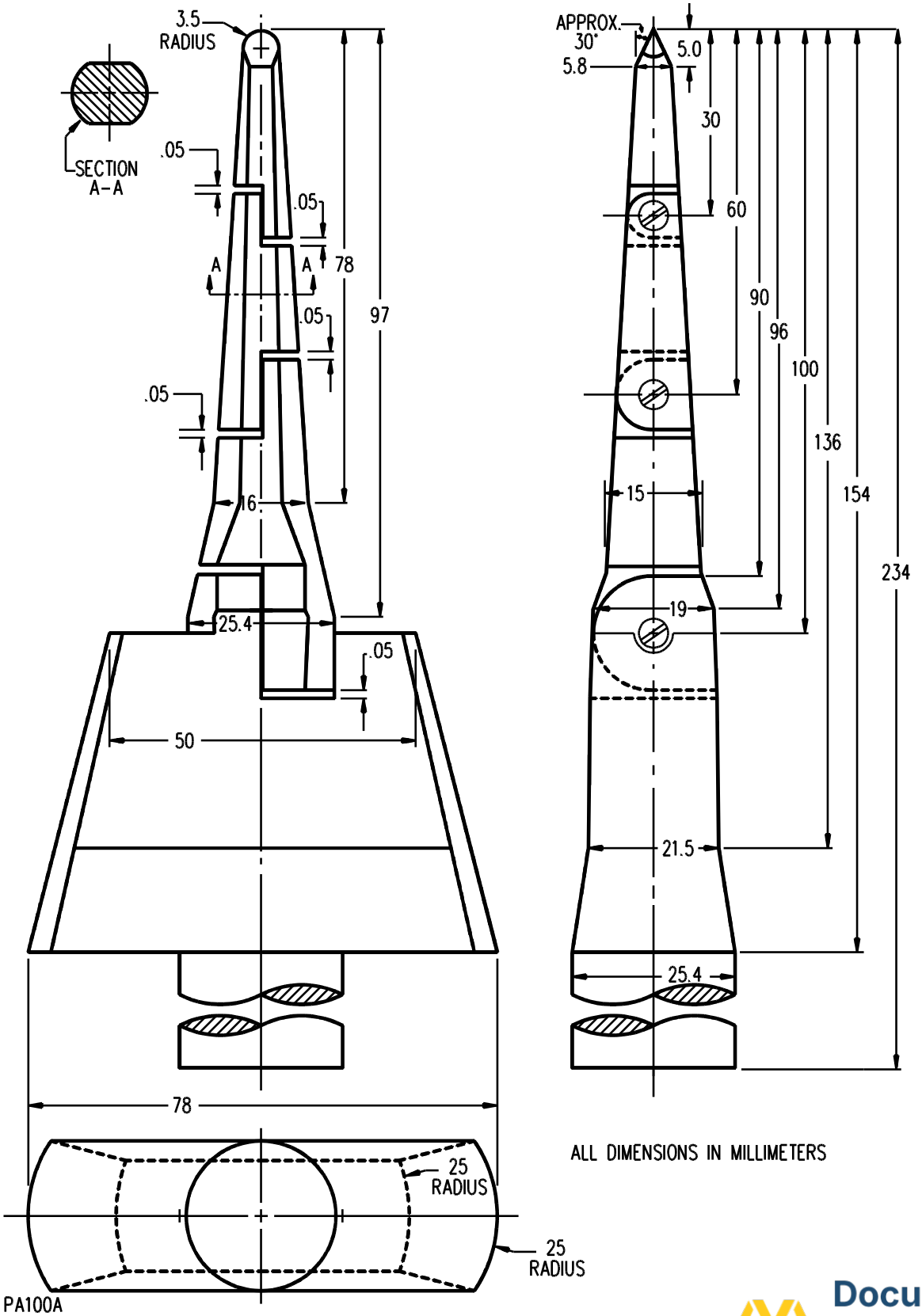

Documents
Document Sharing Hub
Full document details: UL 1727 2021

Table 9.2
Minimum distance from an opening to a part that may involve a risk of electric shock or injury to persons

Minor dimension[a,b] of opening,		Minimum distance from opening to part,[b]	
inches	(mm)	inches	(mm)
3/4[c]	(19.1)	4-1/2	(114.3)
1[c]	(25.4)	6-1/2	(165.1)
1-1/4	(31.8)	7-1/2	(190.5)
1-1/2	(38.1)	12-1/2	(317.5)
1-7/8	(47.6)	15-1/2	(393.7)
2-1/8	(54.0)	17-1/2	(444.5)
d	d	30	(762.0)

[a] See 9.4.5.

[b] Between 3/4 inch (19.1 mm) and 2-1/2 inches (63.5 mm), interpolation is to be used to determine a value between values specified in the table.

[c] Any dimension less than 1 inch (25.4 mm) applies to a motor only.

[d] More than 2-1/2 inches, but not more than 6 inches (152.4 mm).

9.4.2 Uninsulated live parts or film-coated wire of a motor as mentioned in the Exception to 9.4.1 shall comply with either (a) or (b).

a) For an opening with a minor dimension (see 9.4.5) less than 3/4 inch (19.1 mm):

1) Film-coated wire shall not be contacted by the probe illustrated in Figure 9.2;

2) In a directly accessible motor (see 4.20), an uninsulated live part shall not be contacted by the probe illustrated in Figure 9.3; and

3) In an indirectly accessible motor (see 4.31), an uninsulated live part shall not be contacted by the probe illustrated in Figure 9.4.

b) For an opening with a minor dimension of 3/4 inch or more, a part or wire shall be spaced from the opening as specified in Table 9.2.

9.4.3 The probes mentioned in 9.4.1 and 9.4.2 and illustrated in Figure 9.1 – Figure 9.4 shall be applied to any depth that the opening will permit; and shall be rotated or angled before, during, and after insertion through the opening to any position that is necessary to examine the enclosure. The probes illustrated in Figure 9.1 and Figure 9.3 shall be applied in any possible configuration; and, if necessary, the configuration shall be changed after insertion through the opening.

Documents
Document Sharing Hub
Full document details: UL 1727 2021

Figure 9.2

Probe for film-coated wire

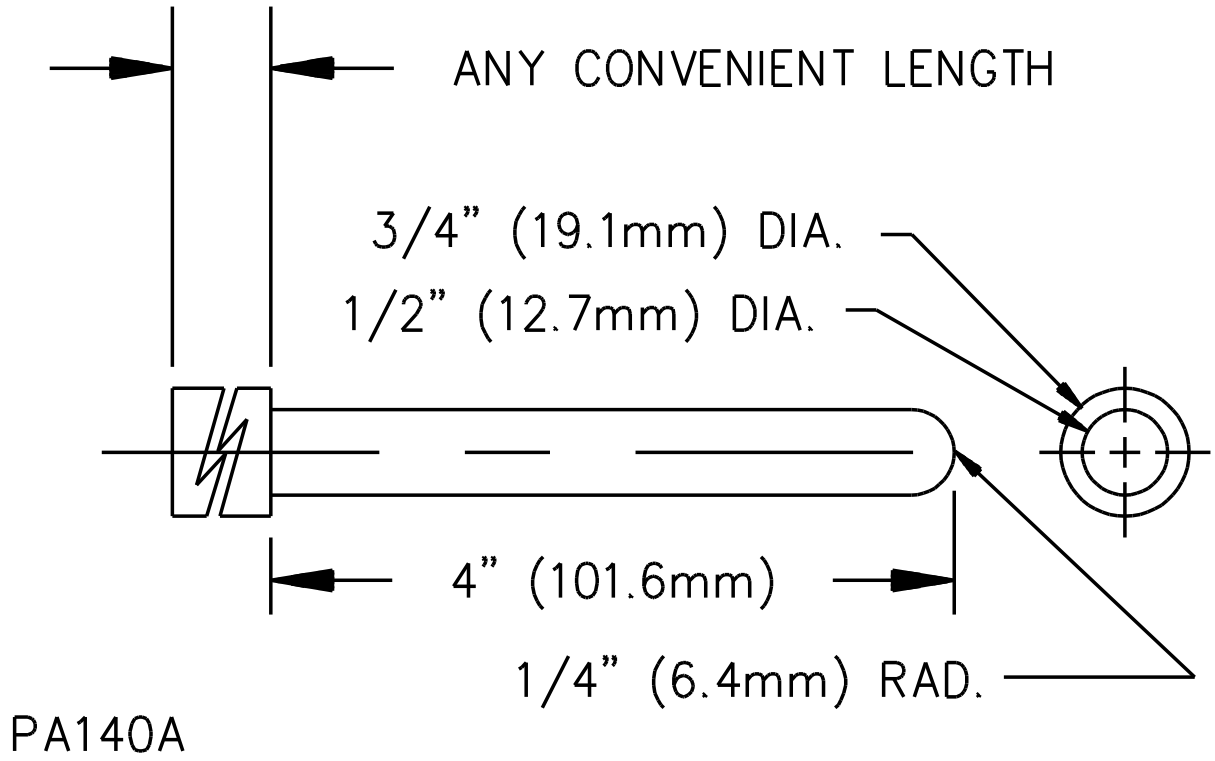

Figure 9.3

Articulated probe

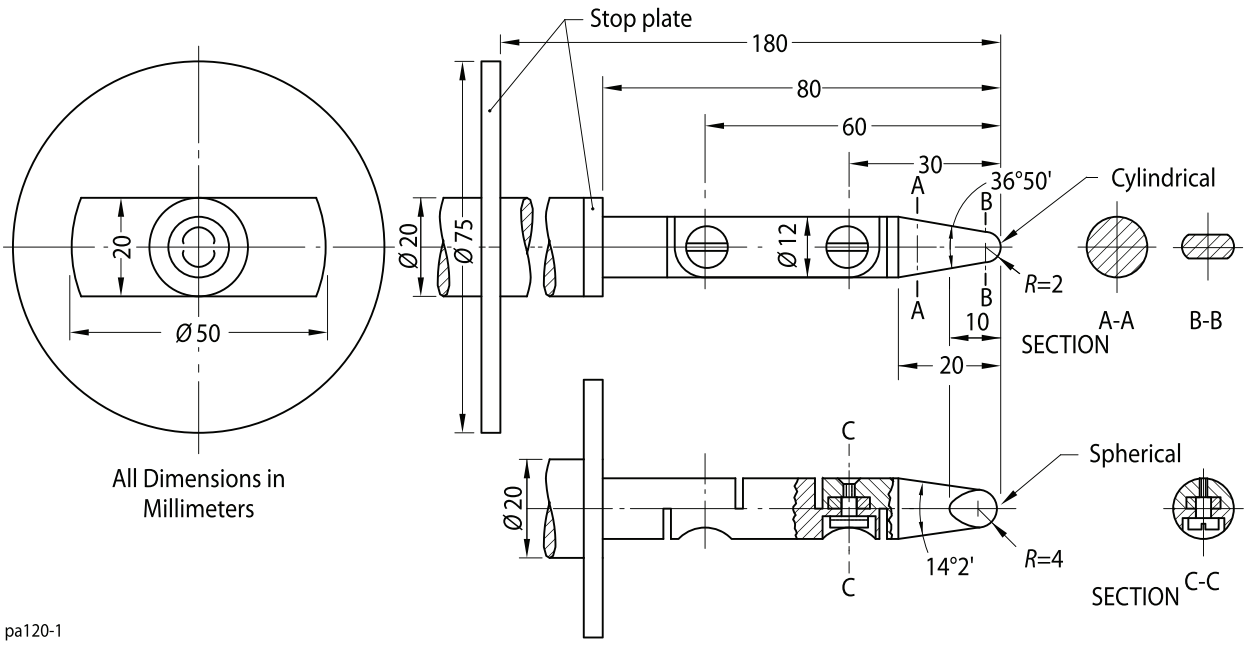

Documents
Document Sharing Hub
Full document details: UL 1727 2021

Figure 9.4

Probe for uninsulated live parts

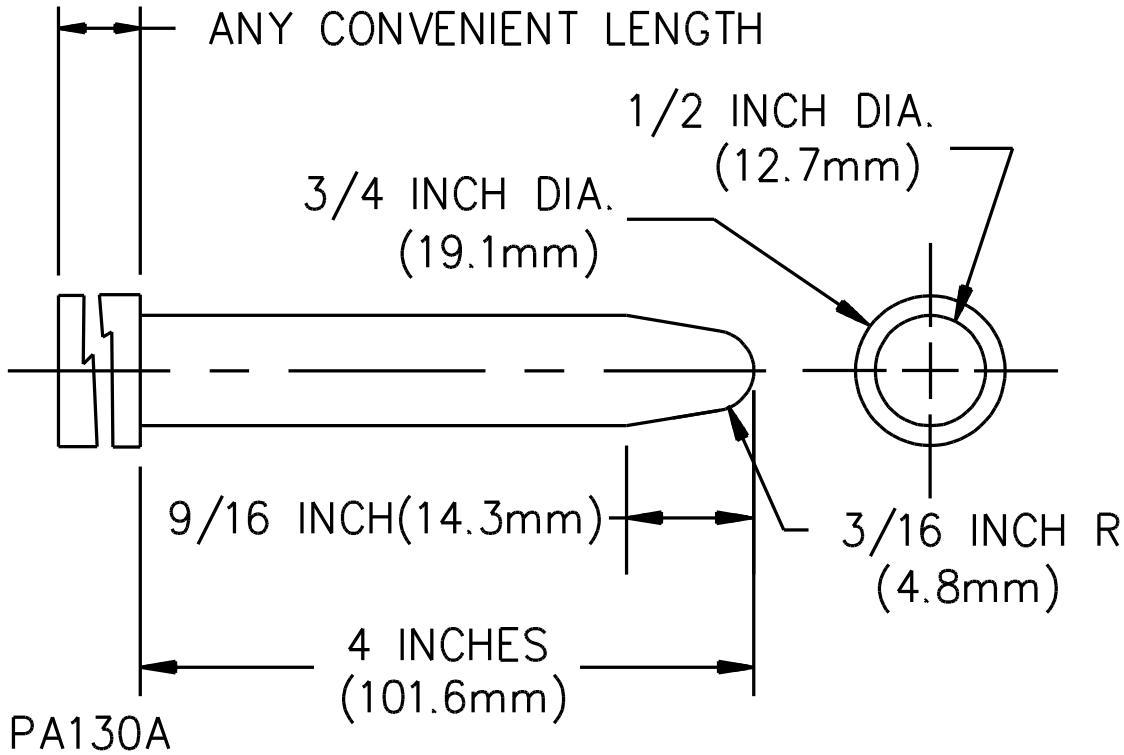

9.4.4 The probes mentioned in 9.4.1 and 9.4.2 shall be used as measuring instruments to judge the accessibility provided by an opening, and not as instruments to judge the strength of a material; they shall be applied with the minimum force necessary to determine accessibility.

9.4.5 With reference to the requirements in 9.4.1 and 9.4.2, the minor dimension of an opening is the diameter of the largest cylindrical probe having a hemispherical tip that can be inserted through the opening.

9.4.6 During the examination of an appliance to determine whether it complies with the requirements in 9.4.1 or 9.4.2 a part of the enclosure that may be opened or removed by the user without using a tool (to attach an accessory, to make an operating adjustment, to replace a fuse, or for other reasons) is to be opened or removed.

9.4.7 With reference to the requirements in 9.4.1 and 9.4.2, insulated brush caps are not required to be additionally enclosed.

9.4.8 A live part of a limited-energy primary circuit is considered to require the same degree of protection against unintentional contact as is required of a live part of a line-voltage circuit.

9.5 Enclosure integrity

9.5.1 An area of an enclosure that is provided with a group of openings or with a guarded opening (such as a grille, louver, or screen) which may affect intended strength of the enclosure is to be subjected to the test described in 56.1.

Documents
Document Sharing Hub
Full document details: UL 1727 2021

9.5.2 The enclosure of a remotely or automatically controlled appliance shall prevent molten metal, burning insulation, flaming particles, or similar material from falling on combustible materials, including the surface upon which the appliance is supported.

9.5.3 The requirement in 9.5.2 requires the use of a barrier of material that is resistant to combustion:

a) Under a motor unless:

1) The structural parts of the motor or of the appliance provide the equivalent of such a barrier;

2) The protection provided with the motor is such that no burning insulation or molten material falls to the surface that supports the appliance when the motor is energized under each of the following fault conditions:

i) Main winding opened;

ii) Starting winding opened;

iii) Starting switch short-circuited; and

iv) For a permanent split capacitor motor, the capacitor short-circuited (the short circuit is to be applied before the motor is energized, and the rotor is to be locked);

or

3) The motor is provided with a thermal motor protector (a protective device that is sensitive to temperature and current) that will prevent the temperature of the motor windings from exceeding 125°C (257°F) under the maximum load under which the motor will run without causing the protector to cycle, and from exceeding 150°C (302°F) with the rotor of the motor locked.

b) Under wiring, unless the wiring is provided with:

1) Flame-retardant rating VW-1 (FR-1); or

2) Wiring contained within sleeving rated VW-1.

9.5.4 The requirement in 9.5.3 also requires that a switch, relay, solenoid, or similar part be individually and completely enclosed unless there is no opening in the bottom of the appliance enclosure, or it can be shown that malfunction of the component would not result in a risk of fire.

Exception: Terminals of a switch, relay, solenoid, or similar device is not required to be individually and completely enclosed.

9.5.5 The barrier mentioned in 9.5.3 shall be horizontal, shall be located as indicated in Figure 9.5 and shall have an area not less than that described in Figure 9.5. An opening for drainage, ventilation, or the like may be employed in the barrier when such an opening would not permit molten metal, burning insulation, or similar material to fall on combustible material.

Documents
Document Sharing Hub
Full document details: UL 1727 2021

Figure 9.5

Location and extent of barrier

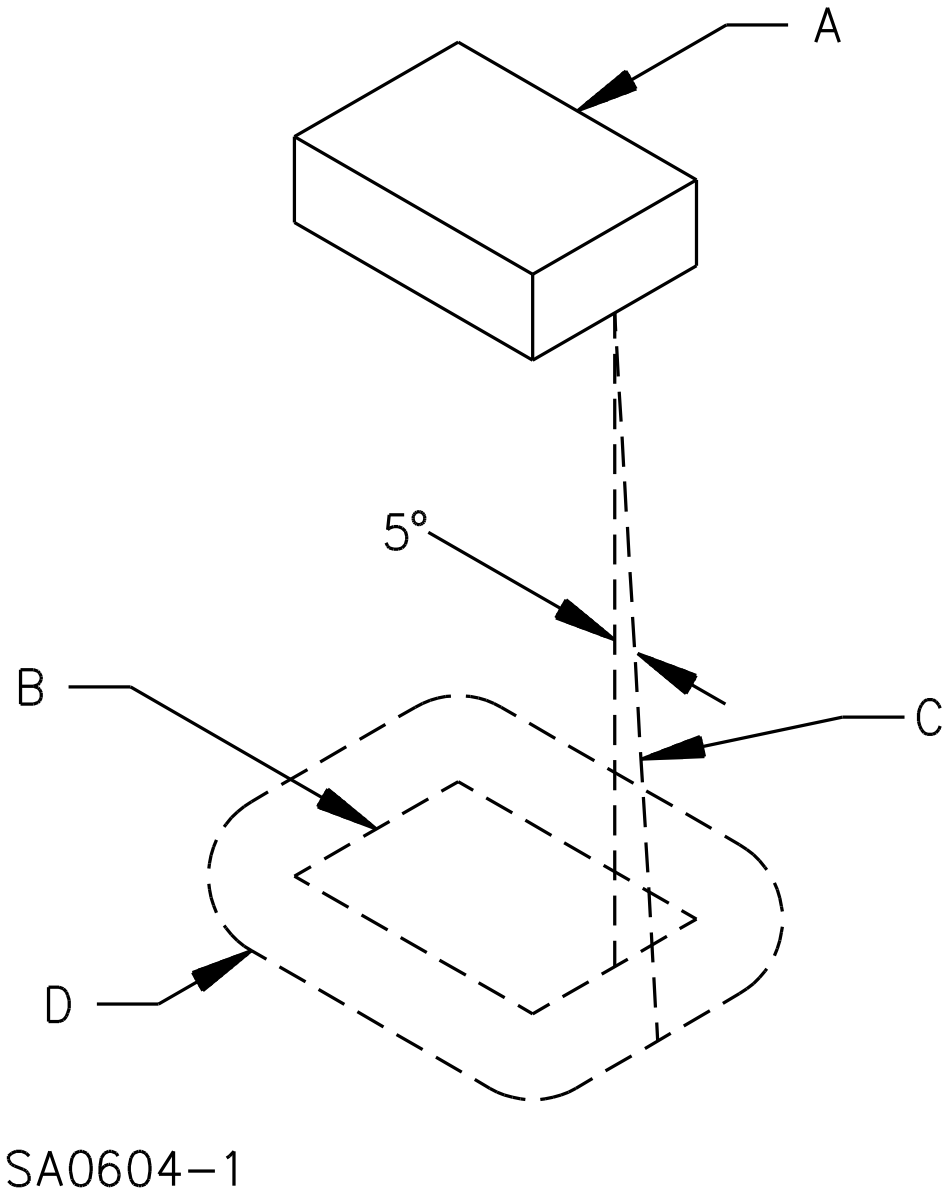

A – Region to be shielded by barrier. This will consist of the entire component if it is not otherwise shielded, and will consist of the unshielded portion of a component that is partially shielded by the component enclosure or equivalent.

B – Projection of outline of component on horizontal plane.

C – Inclined line which traces out minimum area of barrier. The line is always:

a) Tangent to the component,

b) 5 degrees from the vertical, and

c) Oriented so that the area traced out on a horizontal plane is maximum.

D – Location (horizontal) and minimum area for barrier. The area is that included inside the line of intersection traced out by the inclined line C and the horizontal plane of the barrier.

Documents
Document Sharing Hub
Full document details: UL 1727 2021

9.6 Doors and covers

9.6.1 If a door or cover in an outer enclosure gives access to uninsulated live parts in a circuit (other than a low-voltage circuit), it shall be removable only with the use of tools or shall be provided with an interlocking mechanism. See 9.6.2, 9.6.6, and 9.6.7.

9.6.2 An interlocking mechanism complies with the requirements in 9.6.1 if it:

a) Secures the cover in the closed position when engaged and

b) Must be engaged before parts in the circuit can be energized.

9.6.3 The assembly shall be arranged so that an overcurrent protective device such as a fuse, the intended protective functioning of which requires renewal, can be replaced and manual-reset devices can be reset without removal of parts other than the doors or covers and without removal of the cover or door enclosing the device.

9.6.4 A required protective device shall be accessible from outside the appliance only by opening a door or cover.

Exception: The operating handle of a circuit breaker, the operating button of a manually operable protector, and similar parts may project outside the enclosure.

9.6.5 A door or cover of an enclosure shall be hinged or attached in an equivalent manner if:

a) It gives access to fuses or any motor overload protective device, the intended functioning of which requires renewal or

b) It must be opened in connection with the intended operation of the protective device, such as the resetting of a manual reset overload protective device.

9.6.6 A required hinged cover shall not depend solely upon screws or similar means to hold it closed, but shall be provided with an automatic latch or the equivalent and shall be tight-fitting or shall overlap the surface of the enclosure around the opening.

9.6.7 Compliance with the requirements of 9.6.6 may be achieved by use of:

a) A spring latch, a magnetic latch, a dimple, or equivalent mechanical arrangement that will hold the door in place and that will require some physical effort on the user's part to open or

b) A cover interlocking mechanism, as described in 9.6.2 and provided as the sole means for securing the cover or panel.

9.7 Hanging and mounting means

9.7.1 A wall-hung or a wall-mounted appliance shall withstand a force as described in 57.1 without evidence of damage to the mounting surface, to the hanging means, to the mounting means, or to the appliance that results in the risk of electric shock, fire, or injury to persons.

9.7.2 A cord-connected appliance that is provided with keyhole slots, notches, hanger holes, or the like, for hanging the appliance on a wall, shall be provided with the necessary hardware for hanging the appliance in accordance with the installation instructions and constructed in such a manner that the hanging means (such as screws) shall not be accessible without removing the appliance from the supporting means.

Documents
Document Sharing Hub
Full document details: UL 1727 2021

9.7.3 When determining compliance with 9.7.2 any part of the enclosure or barriers that can be removed without the use of tools to gain access to the hanging means is to be removed.

9.7.4 A keyhole slot, notch, or hanger hole shall be located so that the supporting screws or the like cannot damage any electrical insulation or contact uninsulated current-carrying parts of the appliance.

9.7.5 A permanently installed wall-mounted appliance shall be provided with the necessary hardware for mounting in accordance with the installation instructions.

Exception: Small parts commonly available for the mounting of the appliance need not be provided if the installation instructions refer to such parts. See 82.4 for installation instructions.

10 Adhesives Used to Secure Parts

10.1 An adhesive that is relied upon to reduce a risk of fire, electric shock, or injury to persons shall comply with the requirements for adhesives in the Standard for Polymeric Materials – Use in Electrical Equipment Evaluations, UL 746C.

10.2 The requirement in 10.1 also applies to an adhesive used to secure a conductive part, including a nameplate, that may, if loosened or dislodged:

a) Energize an accessible dead-metal part;

b) Make a live part accessible;

c) Reduce spacings below the minimum acceptable values; or

d) Short-circuit live parts.

11 Reduction of Risk of Injury to Persons

11.1 General

11.1.1 Materials employed in the construction of the appliance that are depended upon for reduction of the risk of injury to persons shall have such properties as to meet the demand of intended loading conditions.

11.1.2 Asbestos shall not be used in the airstream of an appliance in such form, manner, or location that it can be dissipated outside the appliance.

11.1.3 A moving part that can cause a risk of injury to persons shall be enclosed or provided with other means to reduce the risk of unintentional contact therewith.

Exception: A part or portion of a part that is necessarily exposed to perform the working function is not required to be enclosed but, when necessary, guarding shall be provided.

11.1.4 With reference to the requirement in 11.1.3 the general construction and intended use of the appliance are to be considered in investigating a guard or enclosure. Among the factors to be taken into consideration in evaluating the acceptability of an exposed moving part are the degree of exposure, the sharpness of the moving part, and the risk of fingers, arms, hair, or clothing being drawn into the moving part (such as at points where gears mesh, where belts travel onto a pulley, or where moving parts close in a pinching or shearing action).

AVA Documents
Document Sharing Hub
Full document details: UL 1727 2021

11.1.5 An appliance or any item furnished with the appliance shall have no sharp edge, burr, point, or spike inside or outside the appliance that may cause injury to persons during intended use and maintenance.

Exception: This requirement does not apply to a part or portion of a part needed to perform a working function.

11.1.6 Whenever referee measurements are necessary to determine that a part as mentioned in 11.1.5 is not sufficiently sharp to constitute a risk of injury to persons, the method described in the Standard for Tests for Sharpness of Edges on Equipment, UL 1439, is to be used.

11.1.7 A device that automatically starts an appliance, such as a timer, an automatically reset overload-protective device, or similar part, shall not be used unless it can be demonstrated that automatic starting will not result in a risk of injury to persons. See 79.6.1.

11.1.8 On an appliance adjustable for height, means shall be provided for holding the upper parts securely in position. Means shall also be provided to prevent the upper part from descending rapidly if the securing means, including a hydraulic or a pneumatic device, loosens or fails to operate as intended.

11.1.9 A hand-supported hair dryer shall have each air intake opening provided with a screen or equivalent means so that there are no openings larger than 0.004 square inch (2.58 mm^2).

11.2 Appliances with reservoirs

11.2.1 An appliance in which liquid reaches a temperature greater than 46°C (115°F) shall comply with 11.2.2 – 11.2.4, 54.2, and the Tip-over Test, Section 55.1. See Figure 55.1.

Exception: A wax-depilatory appliance is not required to comply with these requirements.

11.2.2 The construction of the appliance shall be such as to reduce the risk of injury under conditions simulating intended use. Openings through which liquid can be emitted shall not be provided unless such openings are required to perform an operating function.

11.2.3 An appliance with a vessel or container that has a capacity of more than 32 fluid ounces (946 ml) shall be provided with a fully inserting or a lock-on lid.

11.2.4 If any part of an appliance requires assembly (for example, engagement of a twist-lock part), then improper assembly that might result in a risk of injury to persons shall be clearly visible to the user.

11.3 Wax depilatory appliances

11.3.1 The maximum temperature of the wax, measured as described in 46.5.1 – 46.5.3, shall not exceed 75°C (167°F).

11.3.2 The maximum temperature of surfaces that may be contacted by the user shall be as specified in Table 46.2.

11.3.3 When there are multiple heat settings (for example, a setting for maintaining molten wax at the intended temperature for application to all of the skin and a higher heat setting for quick melting of solid wax), the appliance shall comply with all of the following:

a) If the wax is capable of being heated above 75°C (167°F) for quick melting, the reservoir in which the wax is so heated shall be provided with a nonremovable, self-closing lid or cover.

AVA Documents
Document Sharing Hub
Full document details: UL 1727 2021

b) A visible overheat condition indicator shall be provided. Such an indicator shall indicate when the wax temperature exceeds 75°C. This indicator shall be separate and independent of any other temperature indicator (for example, an indicator light whose functioning depends upon the setting of an adjustable thermostat) which may be provided. See 46.5.3, 81.9(l)(10), and 83.8(e).

c) A marking (such as a number or symbol) shall be provided adjacent to each heat selector position. A permanent marking shall be provided on the appliance in accordance with 79.14.1(b), and the Use and Care Instructions shall warn the user against applying wax that has been heated at a setting higher than the intended setting. See 81.9(l)(10).

d) A part of a temperature control that is user-operated (an adjustment knob or similar part) shall be constructed so that deliberate and positive action by the operator is required to select a heat setting or to change from one heat setting to another. A construction that requires two separate and distinct motions by the user (such as push and turn) is an example of a control that complies with this requirement.

11.3.4 With reference to 11.3.3(a), a nonremovable cover is one which requires special tools (tools not available to other than service personnel) for removal. A self-closing cover is a cover that returns to its fully closed position without any action on the part of the user other than releasing it from any opened position while the appliance is supported by a flat, horizontal surface.

11.3.5 In accordance with 50.3.19.5 and 83.8, if the malfunction of a temperature-regulating control increases the application temperature of the wax above 75°C (167°F), visible means, such as an indicator light, shall be provided to inform the user of an overheat condition.

Exception: A visible overheat condition indicator is not required if a thermal cutoff or a trip-free manual-reset thermostat operates upon short-circuiting of the temperature-regulating control. The temperatures attained by the wax, and surfaces of the appliance that are handled or contacted by the user during intended use, at the time the thermal cutoff or thermostat opens shall not present a risk of burn as determined by an appropriate investigation. The investigation shall include consideration of the length of time that temperatures remain above the specified limits, the thermal inertia of the materials involved, and similar factors.

12 Protection of Service Personnel

12.1 The requirements in this section apply only to appliances of such size and complexity that it may be necessary for service personnel to reach over, under, across, or around uninsulated electrical parts or moving parts to perform service functions while the unit is energized.

12.2 Uninsulated parts that involve a risk of electric shock shall be located or protected so that unintentional contact with the parts is not likely during service operations involving other parts of the unit.

12.3 Moving parts that can cause injury to persons and that must be in motion during service operations not involving the moving parts shall be located or protected so that unintentional contact with the moving parts is not likely.

12.4 If a guard must be removed during servicing of a part involving a risk of electric shock or injury to persons, the guard shall be constructed and arranged so that it can be removed and replaced with a minimum of effort.

Documents
Document Sharing Hub
Full document details: UL 1727 2021

13 Mechanical Assembly

13.1 The assembly of an appliance that involves a motor or other vibrating unit shall be such that the appliance will not be affected adversely by the vibration of intended operation. Brush caps shall be tightly threaded or otherwise constructed to prevent loosening.

13.2 A switch (other than a through-cord switch), a lampholder, a receptacle, a motor-attachment plug, or similar component shall be mounted securely and shall be prevented from turning.

Exception No. 1: The requirement that a switch be prevented from turning can be waived if all the following conditions are met:

a) The switch is of the plunger or other type that does not tend to rotate when operated (a toggle switch is considered to be subject to forces that tend to turn the switch during intended operation of the switch);

b) The means of mounting the switch is such that the operation of the switch is unlikely to result in the switch becoming loosened;

c) The spacings are not reduced below the minimum acceptable values if the switch does rotate; and

d) Intended operation of the switch is by mechanical means rather than by direct contact by persons.

Exception No. 2: A lampholder of the type in which the lamp cannot be replaced (such as a neon pilot or indicator light in which the lamp is sealed in by a nonremovable jewel) need not be kept from turning if the rotation cannot reduce spacings below the minimum required values.

13.3 The means by which the turning mentioned in 13.2 is prevented shall include more than friction between surfaces. For example, a lock washer, properly applied, is acceptable as a means to prevent turning of a device having a single-hole mounting means.

13.4 Positive means shall be provided to keep parts of an appliance from turning with respect to each other if such turning would result in reduction of spacings, twisting of wires, and the like.

Exception: If such parts depend upon 3/8 inch (9.5 mm) or larger pipe threads, no additional means to prevent turning need be provided.

13.5 An appliance intended for connection to a supply of air, water, or the like shall have provisions for such connections. Field connections shall be possible without drilling, cutting, threading, or other alteration of the appliance. During the making of the field connections, internal wiring or electrical components shall not be subject to mechanical damage or stress.

13.6 An appliance that is shipped from the factory disassembled or unassembled to the degree necessary to facilitate shipment shall comply with all of the following:

a) All parts shall be furnished by the manufacturer;

b) Electrical continuity shall be maintained between field-assembled parts;

c) The appliance shall be such that the field assembly can be accomplished without drilling, cutting, threading, or any alteration other than for permanent connection to the supply source;

d) The assembly arrangement, location, and orientation of the separate parts shall be established at the time of manufacture and shall not be dependent on the installer.

AVA Documents
Document Sharing Hub
Full document details: UL 1727 2021

13.7 A fastener that secures the insulating tip of a curling iron, a heated brush, or a similar appliance shall be constructed, fastened, or located so as to prevent the fastener from becoming loosened if such loosening can result in a risk of fire or electric shock.

13.8 Compliance with the requirement in 13.7 may be accomplished by use of:

a) Staked and upset screws,

b) Screws with properly applied lock washers,

c) Press fitting of the insulating tip into place, or

d) Other equivalent means.

A polymeric material relied upon to prevent the fasteners from loosening shall have acceptable mechanical strength, resistance to heat, and dimensional stability. All of these properties are to be considered with respect to thermal aging.

13.9 If any part of a metal spring of a hair clamp of a curling iron or a similar appliance can become loose inside the enclosure of electrical parts as a result of breakage of the spring, the construction shall be such that electrical spacings will not be reduced.

13.10 Compliance with the requirement in 13.9 may be accomplished by:

a) Locating all parts of the spring outside the enclosure of electrical parts,

b) Using barriers,

c) Using physical restraints, or

d) Using other equivalent means.

14 Stability

14.1 A floor- or counter-supported appliance shall be constructed such that it will not be overturned when tested in accordance with 54.1.

Exception: An appliance whose overturning during intended use will not present a risk of burns or injury to persons is not required to be tested.

14.2 With reference to 14.1 a hand-supported hair dryer provided with a stand for conversion into a counter-supported hair dryer is to be considered a hand-supported appliance and is not to be subjected to the stability test.

14.3 A wax depilatory appliance shall be tested and the results shall be evaluated as described in 54.2, except that the wax may be in any combination of solid and liquid states anticipated during the intended operation of the appliance. Any movable parts or covers are to be in the positions that result in the most adverse conditions of use.

Exception: The test need not be conducted on a construction for which there is no possibility of molten wax spilling from its container under any condition of use, such as constructions in which the wax material is contained within completely enclosed wax applicators.

Documents
Document Sharing Hub
Full document details: UL 1727 2021

15 Corrosion Resistance

15.1 Iron and steel parts shall be made corrosion resistant by painting, galvanizing, plating, or other equivalent means if the malfunction of such unprotected parts would be likely to result in a risk of fire, electric shock, or injury to persons.

Exception No. 1: In certain instances in which the oxidation of iron or steel due to the exposure of the metal to air and moisture is not likely to be appreciable, thickness of metal and temperature also being factors, surfaces of sheet steel and cast-iron parts within an enclosure may not be required to be made corrosion resistant.

Exception No. 2: Bearings, laminations, or minor parts of iron or steel, such as washers, screws, and the like need not be made corrosion resistant.

15.2 A container for liquid shall be made resistant to the possible corrosive effect of the liquid intended to be used in the container.

16 Supply Connections

16.1 Permanently-connected appliances

16.1.1 An appliance intended for permanent connection to a power supply, either by being fastened in place, located in a dedicated space, or both, shall have provision for connection of one of the wiring systems that would be acceptable for the appliance.

Exception: If an appliance is not intended for permanent connection to a power supply, and yet is intended to be either fastened in place, located in a dedicated space, or both, it may be provided with a short length of flexible cord in accordance with 16.4.1 – 16.4.12 and with an attachment plug for supply connection. The investigation of such a feature will include consideration of the utility of the appliance and the reasons for having it detachable from its supply source by means of the attachment plug.

16.1.2 A knockout in a sheet-metal enclosure provided for connection of the appliance to a wiring system installed in accordance with the National Electrical Code, ANSI/NFPA 70, shall be securely attached and shall be removable without deformation that would impair the intended performance of the enclosure.

16.1.3 The diameter of a knockout shall be adequate to accommodate conduit of the trade size for which the knockout is intended as specified in Table 16.1.

16.1.4 There shall be a flat surface surrounding a knockout of sufficient area to accommodate attachment of a rigid metallic conduit of a size corresponding to the size of the knockout. The flat area shall have a minimum diameter in accordance with Table 16.1.

Table 16.1
Dimensions associated with knockouts for conduit

Trade size of conduit,		Unthreaded openings			
		Nominal knockout diameter,		Minimum diameter of flat surface at knockout,	
inch	(mm)	inches	(mm)	inches	(mm)
1/2	(12.7)	7/8	(22.2)	1.152	(29.26)
3/4	(19.1)	1-3/32	(27.8)	1.450	(36.83)
1	(25.4)	1-23/64	(34.5)	1.804	(45.82)

AVA Documents
Document Sharing Hub
Full document details: UL 1727 2021

16.2 Field-wiring compartments

16.2.1 A field-wiring compartment in which power supply connections are to be made shall be located so that, during the making of electrical connections, the internal wiring and electrical components will not be exposed to mechanical abuse or stress; and, after the appliance has been installed as intended, such connections will be readily accessible for inspection.

16.2.2 Accessibility of field-installed wiring and inspection of splices is to be judged by:

a) Conducting a trial installation following any instructions provided by the manufacturer or

b) Using any wiring system permitted by the National Electrical Code, ANSI/NFPA 70, if no instructions are provided.

16.2.3 The minimum usable volume of an outlet box or terminal compartment in which field-installed wiring connections to the power supply are to be made shall be as specified in Table 16.2.

Exception: A motor containing an integral wiring compartment that complies with the Standard for Rotating Electrical Machines – General Requirements, UL 1004-1, is not required to comply with this requirement.

Table 16.2
Minimum usable volume of terminal compartment

Size of field-installed conductors,		Volume for each field-installed wire originating outside of the compartment and terminating inside the compartment,[a]	
AWG	(mm^2)	cubic inches	(cm^3)
14	(2.1)	2.00	(33)
12	(3.3)	2.25	(37)
10	(5.3)	2.50	(41)
8	(8.4)	3.00	(50)
6	(13.3)	5.00	(82)

[a] Including a grounding conductor.

16.2.4 There shall be sufficient space within the enclosure for the installation of wires and cables likely to be used when connecting the supply circuit to the equipment.

16.2.5 In the investigation of wiring spaces, it is assumed that the size, type, and conductor material of a wire to be used for installation of wiring connection shall be in accordance with the National Electrical Code, ANSI/NFPA 70.

16.2.6 Wire-bending space when the conductor does not enter or leave the enclosure through the wall opposite its terminal shall be as specified in Table 16.3.

Documents
Document Sharing Hub
Full document details: UL 1727 2021

Table 16.3
Minimum wire-bending space, inches

Wire size, AWG	Wires per terminal (pole)	
	1	2
14 – 10	Not specified	Not specified
8 – 6	1-1/2 inches	–

NOTES

1 For SI units: 1 inch = 25.4 millimeters.

2 Wire-bending space at terminals shall be measured in a straight line from the center of the wire opening, in the direction the wire leaves the terminal, to the wall, barrier or obstruction. (For instructions on measuring, see 16.2.9.)

3 The minimum wire-bending space required for wire sizes or combinations of wires not covered will be determined by investigation.

16.2.7 Wire-bending space when the conductor enters or leaves the enclosure through the wall opposite its terminal shall be as specified in Table 16.4.

Table 16.4
Minimum wire-bending space, inches

Wire size, AWG	Wires per terminal (pole)	
	1	2
14– 10	Not specified	Not specified
8	1-1/2 inches	–
6	2 inches	–

NOTES

1 For SI units: 1 inch = 25.4 millimeters.

2 Wire-bending space at terminals shall be measured in a straight line from the edge of the terminal closest to the wall, in a direction perpendicular to the enclosure wall. (For instructions on measuring, see 16.2.9.)

3 The minimum wire-bending space required for wire sizes or combinations of wires not covered will be determined by investigation.

16.2.8 If a conductor is restricted by a barrier or other means from being bent where it leaves the connector, the distance is to be measured from the end of the barrier.

16.2.9 For a wire-bending space measurement, the lug or connector is to be at the smallest angle to the perpendicular to the box wall that it can assume without defeating any means provided to prevent its turning (such as a boss, shoulder, walls of a recess, multiple bolts securing the connector, and the like). However, it is assumed that the connector is not so oriented that the wire will be directed into a corner of the box to such extent that the transverse wall would necessitate additional bending. If the terminal is provided with one or more lugs or connectors for the connection of conductors in multiple, the distance is to be measured from the wire opening closest to the wall of the enclosure. If the connectors for a circuit are fixed in position (for example, by the wall of a recess) so that they are turned toward each other, the distance is to be measured at the wire opening nearest to the wall in a direction perpendicular to the wall. A barrier, shoulder, or the like is to be disregarded when the measurement is being made if it does not reduce the radius to which the wire must be bent otherwise.

16.2.10 A wiring space in which knockouts are provided shall be of such a width as to accommodate (with respect to bending) conductors of the maximum size likely to be used at that knockout.

Exception: The wiring space may be of lesser width when:

Documents
Document Sharing Hub
Full document details: UL 1727 2021

a) Knockouts of required size are provided elsewhere in the equipment;

b) The wiring space at such other point or points is sufficiently wide to accommodate the conductors in question; and

c) The knockout or knockouts at such other points can be conveniently used in the intended wiring of the appliance.

The values of the minimum acceptable width of a wiring space, with respect to conductors entering the knockout, are the same as the values of minimum bending space given in Table 16.3.

16.2.11 An electrical component shall not be mounted on a part, such as the cover of a wiring-terminal compartment, that must be moved so that field-wiring connections can be made or inspected.

16.2.12 A field-wiring compartment intended for connection of a supply raceway and mounted integrally with the appliance shall be attached so as to be kept from turning with respect to the appliance.

16.2.13 If the constructional features of an appliance are such that field-wiring connections can be made in the motor terminal compartment, the compartment shall comply with the applicable requirements for electric motors.

16.3 Wiring terminals and leads

16.3.1 An appliance intended for permanent connection to the power supply shall be provided with wiring terminals, including an equipment grounding terminal, for the connection of conductors having an ampacity acceptable for the appliance; or the appliance shall be provided with leads acceptable for such connection.

16.3.2 A wiring terminal shall be provided with a soldering lug or with a pressure terminal connector securely fastened in place (for example, firmly bolted or held by a screw).

Exception: A wire-binding screw may be used at a wiring terminal intended to accommodate a 10 AWG (5.3 mm^2) or smaller conductor if upturned lugs or a cupped washer or the equivalent are provided to hold the wire in position.

16.3.3 Upturned lugs or a cupped washer or the equivalent shall be capable of retaining the conductor mentioned in 16.3.1 under the head of the screw or the washer.

16.3.4 A wiring terminal shall be prevented from turning or shifting in position by means other than friction between surfaces. This may be accomplished by two screws or rivets; by square shoulders or mortices; by a dowel pin, lug or offset; by a connecting strap or clip fitted into an adjacent part; or by an equivalent means.

16.3.5 A wire-binding screw at a wiring terminal shall not be smaller than No. 10 (4.8 mm).

Exception: A No. 8 (4.2 mm) screw may be used at a terminal intended only for the connection of a 14 AWG (2.1 mm^2) conductor, and a No. 6 (3.5 mm) screw may be used for the connection of a 16 AWG (1.3 mm^2) or 18 AWG (0.82 mm^2) control-circuit conductor.

16.3.6 A terminal plate tapped for a wire-binding screw shall be of metal not less than 0.050 inch (1.27 mm) thick. There shall be two or more full threads in the metal, which may be extruded if necessary to provide the threads.

Documents
Document Sharing Hub
Full document details: UL 1727 2021

Exception: A plate less than 0.050 inch thick, but not less than 0.030 inch (0.762 mm) thick, may be used if the tapped threads are determined to have equivalent mechanical strength.

16.3.7 A wire-binding screw shall thread into metal.

16.3.8 An appliance intended for connection to a grounded power supply conductor and employing:

a) A lampholder of the Edison screw-shell type;

b) A single-pole switch; or

c) A single-pole, automatic control

shall have one terminal or lead intended for connection of the grounded conductor of the supply circuit. The terminal or lead intended for grounded connection shall be the one that is connected to the screw shell of a lampholder and shall have no connection to a single pole switch or single pole automatic control.

Exception: With respect to connection of a single pole automatic control, the requirements in 32.1 shall apply.

16.3.9 With reference to 16.3.8, if leads from a motor or other component terminate in an attachment plug intended for insertion in a receptacle that is:

a) Provided as part of the appliance and

b) Intended for connection of the branch-circuit power supply conductors,

the plug and receptacle shall be polarized if a single-pole switch or an Edison-base lampholder is connected in the load side of these devices.

16.3.10 A terminal intended for the connection of a grounded circuit conductor shall be made of or plated with a metal substantially white in color and shall be readily distinguishable from the other terminals, or identification of that terminal shall be clearly shown in some other manner, such as on an attached wiring diagram.

16.3.11 A lead intended for field connection shall comply with the following:

a) The lead shall be not smaller than 18 AWG (0.82 mm^2);

b) The insulation thickness shall comply with Table 16.5; and

c) The free length of the lead inside an outlet box or wiring compartment shall be at least 6 inches (152 mm).

Documents
Document Sharing Hub
Full document details: UL 1727 2021

Table 16.5
Characteristics of leads intended for field connection

Insulation	Nominal wall thickness of insulation,		Braid or jacket required	Nominal thickness of braid or jacket,	
	inch	(mm)		inch	(mm)
Thermoplastic or neoprene	1/32[a]	(0.8)	No[a]	–	–
Rubber	1/32[b]	(0.8)	Yes[a]	1/64[a]	(0.4)
Cross-linked synthetic polymer[c]	1/64	(0.4)	No	–	–

[a] The nominal wall thickness may be less than 1/32 inch but not less than 1/64 inch if the wire is provided with a braid or jacket having a nominal thickness not less than 1/64 inch.

[b] For heat-resistant rubber other than of a silicone type, the nominal wall thickness is to be not less than 3/64 inch (1.2 mm) and no braid is required.

[c] Synthetic compounds other than neoprene or rubber, such as that used on Type XHHW wire.

16.3.12 The exterior surface of a lead intended for field connection shall be white or grey, and that lead shall be readily distinguishable from other leads.

16.3.13 The exterior surface of an insulated lead intended solely for the connection of an equipment-grounding conductor shall be green with or without one or more yellow stripes, and no other lead shall be so identified.

16.3.14 A wire-binding screw intended for the connection of an equipment grounding conductor shall have a green-colored head that is hexagonal, or slotted, or both. A pressure wire connector intended for connection of such a conductor shall be plainly identified by the marking "G," "GR," "GND," "Grounding," or the like on or adjacent to the terminal or by a marking on the wiring diagram provided on the appliance. The wire-binding screw or pressure wire connector shall be so located that it is unlikely to be removed during servicing of the appliance.

16.4 Cord-connected appliances

16.4.1 An appliance intended for cord connection shall be provided with a length of flexible cord and an attachment plug for connection to the supply circuit. A coiled cord may be used in a hand-supported or wall-hung appliance. A coiled cord may also be used in a floor- or counter-supported appliance if such usage will not result in a condition (for example, the appliance being pulled off a table by the force of the cord) likely to present a risk of burn, electric shock, fire, or injury to persons. The cord length is to be measured from the point of cord entry into the enclosure, or into the wiring device at the attachment plug and shall be within the limits specified in Table 16.6.

16.4.2 If a coiled cord is used, the cord length shall comply with Table 16.6 when the cord is in the uncoiled position.

Documents
Document Sharing Hub
Full document details: UL 1727 2021

Table 16.6
Cord lengths for specific conditions

Type of appliance	Cord length			
	Minimum,		Maximum,	
	feet	(m)	feet	(m)
Appliance supported by table or counter top	5	(1.52)	8	(2.44)
Wall-hung appliance with attached appliance supported by hand	10[a]	(3.05)	12[a]	(3.66)
	2[b]	(0.61)	3[b]	(0.91)
Appliance usually supported by hand	9	(2.74)	12	(3.66)
Hair dryer, floor-supported	3[c]	(0.91)	9	(2.74)
All appliances not covered above	6	(1.83)	8	(2.44)

[a] Between wall unit and hand unit.

[b] Between wall unit and receptacle.

[c] If the cord entry point is higher than 2 feet (0.61 m) above the floor, one additional foot (0.3 m) is to be added to the minimum cord length for each additional foot that the cord entry point is located above the floor, or fraction thereof, up to a maximum cord length of 6 feet (1.83 m).

16.4.3 The flexible cord may be permanently attached to the appliance; or, for other than a hand-supported appliance, in the form of a detachable power supply cord with means for connection to the appliance. Examples of the means for connection are:

a) An appliance plug;

b) A flatiron plug; or

c) A cord connector cooperating with pin or blade terminals on the appliance.

16.4.4 A cord set, detatchable power supply cord, and power supply cord with or without integral fittings, shall comply with the requirements in the Standard for Cord Sets and Power Supply Cords, UL 817.

Exception: A power supply with integral swivel assembly complies with the applicable requirements in this standard and the following requirements in UL 817:

a) Normal Temperature Test, Section 87, with the temperature rise at swivel contact not more than 30°C;

b) Dielectric Voltage Withstand Test, Section 88, with dielectric voltage applied:

1) Between two individual conductors of swivel plug and

2) Between conductors of swivel plug and metal foil tightly wrapped onto surface of molded-on swivel plug (other than fitting face);

c) Insulation Resistance Test, Section 89; and

d) Accelerated Aging Tests, Section 90.

16.4.5 The ampacity of the cord and of the plug shall be not less than the current rating of the appliance. Such components shall be rated for use at a voltage equal to the rated voltage of the appliance.

16.4.6 With respect to 16.4.5, the voltage rating of a dual voltage appliance is considered to be that for which the appliance is set when it is shipped from the factory.

Documents
Document Sharing Hub
Full document details: UL 1727 2021

16.4.7 The flexible cord shall be of a type indicated in Table 16.7 or the equivalent.

Table 16.7
Acceptable types of cords and limitations on their use

Appliance on which cord is to be used	Cords acceptable where temperatures higher than 121°C (250°F) are attained on any surface the cord can touch	Cords acceptable where 121°C (250°F) or lower temperatures are attained on any surface the cord can touch
Floor supported	HSJ, HSJO, HS, HSO	HSJ, HSJO, HS, HSO, SJ, SJE, SJO, SJT, SJTO, S, SE, SO, ST, STO
Hand-supported hair dryers, heated-air curling irons and brushes, and counter-supported appliances	HPD, HPN, HSJ, HSJO	HPD, HPN, HSJ, HSJO, SP-2, SPE-2, SPT-2, SV, SVE, SVO, SVT, SVTO, SJ, SJE, SJO, SJT, SJTO
Facial saunas	–	SP-2, SPE-2, SPT-2
Combs	SP-2, SPE-2, SPT-2, HPN	SP-2, SPE-2, SPT-2, HPN
Curling irons and brushes, hair-crimping and hair-straightening irons, and similar hand-supported appliances	TPT[a], SP-1, SPE-1, SPT-1, XT[b], HPD, HPN	TPT[a], SP-1, SP-2, SPE-1, SPE-2, SPT-1, SPT-2, XT[b], HPD, HPN
Manicure and pedicure sets	–	SP-2, SPE-2, SPT-2

[a] Type TPT cord may be used with appliances rated 50 watts or less and weighing 1/2 pound (454 g) or less. The weight is to be determined without the power supply cord.

[b] Minimum 20 AWG (0.52 mm^2) parallel, 2-conductor construction required.

16.4.8 The attachment plug of a cord-connected appliance and the integral blades of a direct plug-in appliance provided with a 15- or 20-ampere, general-use receptacle shall be of the 3-wire grounding type. The attachment plug and the integral blades of all other cord-connected and direct plug-in appliances provided with either a line-connected, single-pole on-off switch or overcurrent protective device, or an Edison-base lampholder shall be polarized or of the grounding type.

16.4.9 A power supply cord with integral fittings shall comply with the requirements in the Standard for Cord Sets and Power Supply Cords, UL 817, except that it is not required to be provided with integral overcurrent protection.

16.4.10 Attachment plugs, appliance couplers, appliance inlets (motor attachment plugs), and appliance (flatiron) plugs, shall comply with the Standard for Attachment Plugs and Receptacles, UL 498. See 20.3.15 for single and multipole connectors for use in data, signal, control and power applications within and between electrical equipment.

Exception No. 1: Attachment plugs and appliance couplers integral to cord sets or power supply cords that are investigated in accordance with the Standard for Cord Sets and Power Supply Cords, UL 817 are not required to comply with UL 498.

Exception No. 2: A fabricated pin terminal assembly need not comply with UL 498 if it complies with:

a) Mechanical Assembly, Section 13;

b) Accessibility of live parts; Section 9.4;

c) Live Parts, Section 17;

d) Pin terminals, Section 16.5;

e) Electrical Insulation, Section 23; and

Documents
Document Sharing Hub
Full document details: UL 1727 2021

f) Spacings, Section 34

of this standard.

16.4.11 Female devices (such as appliance couplers, and connectors) that are intended, or that may be used, to interrupt current in the end product, shall be suitably rated for current interruption of the specific type of load, when evaluated with its mating plug or connector. For example, an appliance coupler that can be used to interrupt the current of a motor load shall have a suitable horsepower rating when tested with its mating plug.

16.4.12 Connections of the flexible cord conductors to a 2- or 3-wire polarized attachment plug shall be as illustrated in Figure 16.1.The polarity identification of the flexible cord shall comply with Table 16.8.

Figure 16.1

Connection to attachment plug

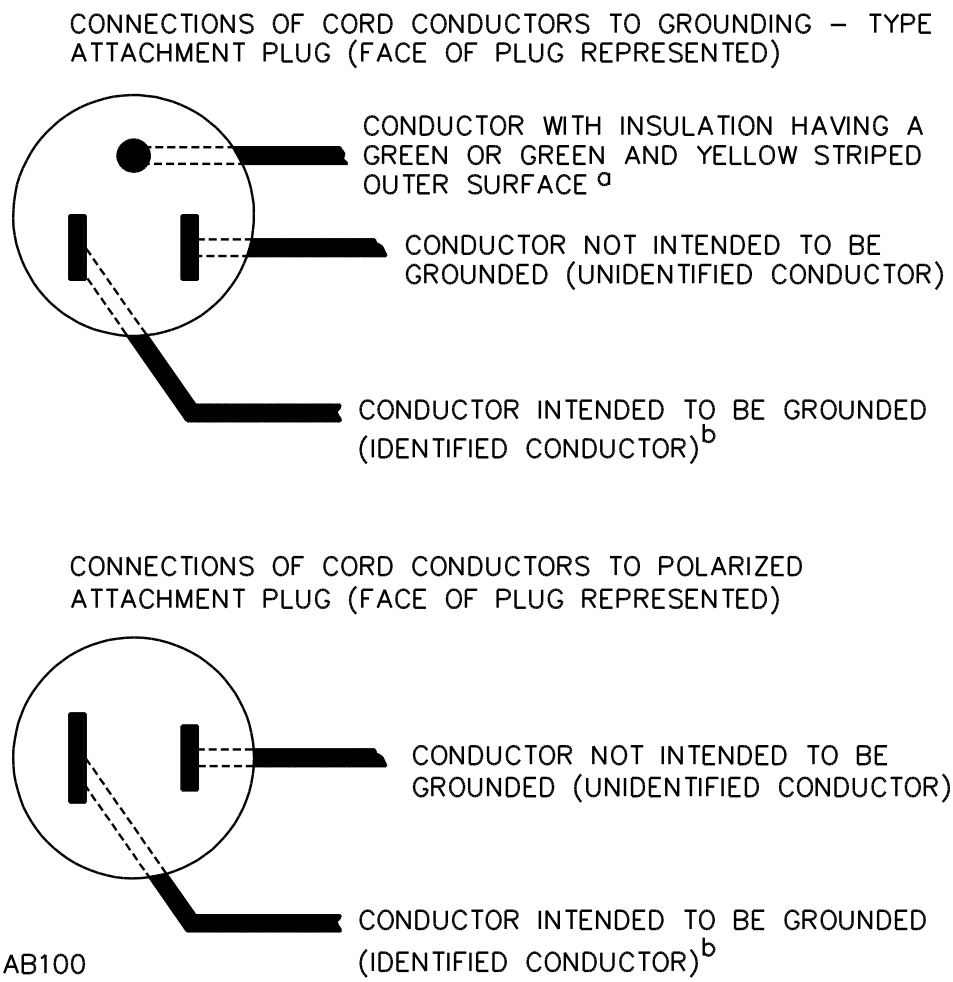

[a] In the above illustration, the blade to which the green conductor is connected may have a U-shaped or circular cross section.

[b] Signifies a conductor identified in accordance with Table 16.8.

Documents
Document Sharing Hub
Full document details: UL 1727 2021

Table 16.8
Polarity identification of flexible cords

Method of polarity identification	Combinations	
Wire intended to be grounded[a]	All other wires[a]	
Colored braid	Solid white or gray	Solid color other than white or gray
Tracer in braid	Solid white or gray braid with no tracer in braid[b]	Solid white or gray braid with a colored tracer in braid[b]
Tracer in braid	Colored tracer in braid of a color other than white or gray	No tracer in braid of solid color other than white or gray
Colored insulation[c]	Solid white or gray	Solid color other than white or gray
Colored insulation[c]	Light blue[d]	Solid color other than light blue, white, or gray[d]
Colored separator[e]	White or gray	Color other than white or gray
Tinned conductors[f]	Tin or other white metal on all strands of the conductor	No tin or other white metal on the strands of the conductor
Surface marking[e]	One or more stripes, ridges, or grooves, or a combination of these on the exterior surface of the cord	–

[a] A conductor having insulation finished to show a green color with or without one or more straight or helical unbroken yellow stripes or having a green braid with or without one or more yellow tracers is to be used only as an equipment grounding conductor. See also 38.1.4 for the description of an equipment grounding conductor and Figure 16.1 for the connection of conductors to attachment plugs.

[b] Only for Types C and PD cords.

[c] Only for a cord having no braid on any individual conductor.

[d] Only for a cord having a jacket that is not integral with the circuit conductor insulation.

[e] Only for Types SP-1, SP-2, SPE-1, SPE-2, SPT-1, and SPT-2 cords.

[f] Only for Types SPT-1 and SPT-2 cords.

16.4.13 A cord reel shall comply with "special use cord reel" requirements of the Standard for Cord Reels, UL 355. For products provided with cord tag, the cord tag shall not retract into cord reel.

16.5 Pin terminals

16.5.1 If an appliance is provided with pin terminals, the construction of the appliance shall be such that no live part will be exposed to unintentional contact both during or after the placement of the plug on the pins in the intended manner.

16.5.2 If an appliance is provided with pin terminals, a pin guard is required such that:

a) A straight edge placed in any position, across and in contact with edges of the plug opening without the plug in place, cannot be made to contact any current-carrying pin.

b) With the plug aligned with the pins and the face of the plug in a plane located perpendicular to the end or ends of the farthest projecting current-carrying pin, the probe illustrated in Figure 9.1 shall not touch any current-carrying pin while the probe is inserted through any opening with the appliance in any position.

16.5.3 If the pins on the appliance are of American National Standard configuration, the plug used in 16.5.2(b) shall consist of an appliance plug in accordance with the Standard for Wiring Devices – Dimensional Specifications, ANSI/NEMA WD6-1997.

Documents
Document Sharing Hub
Full document details: UL 1727 2021

16.5.4 If the pins on the appliance are not of an American National Standard configuration, the plug used in 16.5.2(b) is to be the plug supplied with the appliance, 125 volts, 10 amperes, and 250 volts, 5 amperes.

16.5.5 If an appliance employs three or more pin terminals intended for use with a plug that covers all the pins, the terminals shall be so spaced that they will not mate with a cord connector for which the pins are not intended, such as a flatiron plug or an appliance plug. The plug these pins will accommodate shall be that required for the particular application.

16.5.6 A pin terminal shall be securely and rigidly mounted and shall be prevented from shifting in position by means other than friction between surfaces.

16.5.7 The requirement in 16.5.6 is intended primarily to provide for the maintenance of spacings as given in 34.2 and to provide for the maintenance of required spacings between pin terminals. Under this requirement, consideration is also to be given to the means for locking terminals in position to maintain tightness.

16.5.8 The material on which the pin terminals are mounted, the proximity of any vapor outlet to the terminals, and the direction of the vapor spray shall be such that water will be prevented from accumulating at the terminals.

16.6 Strain relief

16.6.1 Strain relief shall be provided in accordance with the Strain Relief Test, Section 58, such that stress on a flexible cord will not be transmitted to a terminal, splice, or internal wiring in the appliance or in a fitting.

16.6.2 Insulating bushings serving as strain relief shall comply with the Standard for Insulating Bushings, UL 635. Tests specified in this standard (e.g. Strain Relief Test, Section 58) may still need to be performed to confirm the combination of the insulating bushing and the supporting part are suitable.

16.6.3 Strain relief shall be provided in accordance with the Torque Test, Section 59, such that stress on a flexible cord will not be transmitted to a terminal, splice, or internal wiring in the appliance or in a fitting.

16.6.4 A metal strain-relief clamp or band may be used with Type SP-2, SPE-2, or lighter general-use rubber-insulated cord only if acceptable auxiliary insulation is provided over the cord for mechanical protection.

Exception: The auxiliary insulation may be omitted for Type SV, SVE, SVO, SVEO, or SVOO cord.

16.6.5 A strain relief clamp of any material, metal or otherwise, is not acceptable for use on Type SPT-1, SPT-2, SVT, SVTO, or SVTOO cord.

Exception: A clamp may be used if the cord is protected by varnished-cloth tubing or by means that have been determined to be the equivalent under the clamp, and the construction complies with the requirements specified in 58.3.

16.6.6 For thermoplastic-insulated cord heavier than Types SVT, SVTO, and SVTOO, a clamp may be used, and auxiliary insulation is not required unless it is judged that the clamp is damaging to the cord insulation.

16.6.7 Means shall be provided to prevent the flexible cord from being pushed into the appliance enclosure through the cord-entry hole if such displacement might subject the cord to mechanical damage or to exposure to a temperature higher than that for which the cord is rated, or might reduce spacings

AVA Documents
Document Sharing Hub
Full document details: UL 1727 2021