UL 1278

Movable and Wall- or Ceiling-Hung Electric Room Heaters

UL COPYRIGHTED MATERIAL –
NOT AUTHORIZED FOR FURTHER REPRODUCTION OR
DISTRIBUTION WITHOUT PERMISSION FROM UL

Documents
Document Sharing Hub

Full document details: UL 1728 2008

UL COPYRIGHTED MATERIAL –
NOT AUTHORIZED FOR FURTHER REPRODUCTION OR
DISTRIBUTION WITHOUT PERMISSION FROM UL

Documents
Document Sharing Hub

Full document details: UL 1728 2008

Underwriters Laboratories Inc. (UL)
333 Pfingsten Road
Northbrook, IL 60062-2096

UL Standard for Safety for Movable and Wall- or Ceiling-Hung Electric Room Heaters, UL 1278

Third Edition, Dated June 21, 2000

Revisions: This Standard contains revisions through and including February 11, 2008.

Summary of Topics

Revision pages have been issued for the Standard for Movable and Wall- or Ceiling-Hung Electric Room Heaters, UL 1278, to reflect the latest ANSI approval date and to incorporate the proposals dated September 21, 2007, and November 23, 2007. These proposals include the following:

- ***Additional supply cord requirements added to Section 16, 64, 65 and new Sections 59A – 59D.***

- ***Revision to Table 16.2 to include electrical connections at the point of connection of the power supply cord to internal wiring/ connectors in heaters.***

- ***Revision to Paragraph 39.2.1.1 to clarify the requirements for normal operation and temperature-limiting devices.***

- ***Revision to Paragraph 18.3.1 to include additional manufacturing and production line tests under the QA audit program.***

- ***Revision to Section 42 to increase the electrical wiring endurance cycles from 100,000 to 750,000 when subjected to repetitive motion.***

UL Standards for Safety are developed and maintained in the Standard Generalized Markup Language (SGML). SGML -- an international standard (ISO 8879-1986) -- is a descriptive markup language that describes a document's structure and purpose, rather than its physical appearance on a page. Due to formatting differences resulting from the use of UL's new electronic publishing system, please note that additional pages (on which no requirements have been changed) may be included in revision pages due to relocation of existing text and reformatting of the Standard.

Text that has been changed in any manner is marked with a vertical line in the margin. Changes in requirements are marked with a vertical line in the margin and are followed by an effective date note indicating the date of publication or the date on which the changed requirement becomes effective.

The following table lists the future effective dates with the corresponding reference.

UL COPYRIGHTED MATERIAL –
NOT AUTHORIZED FOR FURTHER REPRODUCTION OR
DISTRIBUTION WITHOUT PERMISSION FROM UL

Documents
Document Sharing Hub

Full document details: UL 1728 2008

Future Effective Date	References
February 11, 2011	Table 16.1, Table 16.2, Section 16A, 16.4.1, 18.3.1, 39.2.1.1, 42.2.1, 42.2.2, 42.2.4, Sections 59A – 59D, 64.13, 65.2.1, 65.2.3, 65.3.2, 65.3.3, SB16.3

The new and revised requirements are substantially in accordance with UL's Proposal(s) on this subject dated September 21, 2007 and November 23, 2007.

The revisions dated February 11, 2008 include a reprinted title page (page1) for this Standard.

As indicated on the title page (page 1), this UL Standard for Safety is an American National Standard. Attention is directed to the note on the title page of this Standard outlining the procedures to be followed to retain the approved text of this ANSI/UL Standard.

The UL Foreword is no longer located within the UL Standard. For information concerning the use and application of the requirements contained in this Standard, the current version of the UL Foreword is located on ULStandardsInfoNet at: http://ulstandardsinfonet.ul.com/ulforeword.html

The master for this Standard at UL's Northbrook Office is the official document insofar as it relates to a UL service and the compliance of a product with respect to the requirements for that product and service, or if there are questions regarding the accuracy of this Standard.

UL's Standards for Safety are copyrighted by UL. Neither a printed copy of a Standard, nor the distribution diskette for a Standard-on-Diskette and the file for the Standard on the distribution diskette should be altered in any way. All of UL's Standards and all copyrights, ownerships, and rights regarding those Standards shall remain the sole and exclusive property of UL.

All rights reserved. No part of this publication may be reproduced, stored in a retrieval system, or transmitted in any form by any means, electronic, mechanical photocopying, recording, or otherwise without prior permission of UL.

Revisions of UL Standards for Safety are issued from time to time. A UL Standard for Safety is current only if it incorporates the most recently adopted revisions.

UL provides this Standard ″as is″ without warranty of any kind, either expressed or implied, including but not limited to, the implied warranties of merchantability or fitness for any purpose.

In no event will UL be liable for any special, incidental, consequential, indirect or similar damages, including loss of profits, lost savings, loss of data, or any other damages arising out of the use of or the inability to use this Standard, even if UL or an authorized UL representative has been advised of the possibility of such damage. In no event shall UL's liability for any damage ever exceed the price paid for this Standard, regardless of the form of the claim.

UL will attempt to answer support requests concerning electronic versions of its Standards. However, this support service is offered on a reasonable efforts basis only, and UL may not be able to resolve every support request. UL supports the electronic versions of its Standards only if they are used under the conditions and operating systems for which it is intended. UL's support policies may change from time-to-time without notification.

UL reserves the right to change the format, presentation, file types and formats, delivery methods and formats, and the like of both its printed and electronic Standards without prior notice.

UL COPYRIGHTED MATERIAL –
NOT AUTHORIZED FOR FURTHER REPRODUCTION OR
DISTRIBUTION WITHOUT PERMISSION FROM UL

Documents
Document Sharing Hub

Full document details: UL 1728 2008

Purchasers of the electronic versions of UL's Standards for Safety agree to defend, indemnify, and hold UL harmless from and against any loss, expense, liability, damage, claim, or judgement (including reasonable attorney's fees) resulting from any error or deviation introduced while purchaser is storing an electronic Standard on the purchaser's computer system.

If a single-user version electronic Standard was purchased, one copy of this Standard may be stored on the hard disk of a single personal computer, or on a single LAN file-server or the permanent storage device of a multiple-user computer in such a manner that this Standard may only be accessed by one user at a time and for which there is no possibility of multiple concurrent access.

If a multiple-user version electronic Standard was purchased, one copy of the Standard may be stored on a single LAN file-server, or on the permanent storage device of a multiple-user computer, or on an Intranet server. The number of concurrent users shall not exceed the number of users authorized.

Electronic Standards are intended for on-line use, such as for viewing the requirements of a Standard, conducting a word search, and the like. Only one copy of the Standard may be printed from each single-user version of an electronic Standard. Only one copy of the Standard may be printed for each authorized user of a multiple-user version of an electronic Standard. Because of differences in the computer/software/printer setup used by UL and those of electronic Standards purchasers, the printed copy obtained by a purchaser may not look exactly like the on-line screen view or the printed Standard.

An employee of an organization purchasing a UL Standard can make a copy of the page or pages being viewed for their own fair and/or practical internal use.

The requirements in this Standard are now in effect, except for those paragraphs, sections, tables, figures, and/or other elements of the Standard having future effective dates as indicated in the note following the affected item. The prior text for requirements that have been revised and that have a future effective date are located after the Standard, and are preceded by a ″SUPERSEDED REQUIREMENTS″ notice.

New product submittals made prior to a specified future effective date will be judged under all of the requirements in this Standard including those requirements with a specified future effective date, unless the applicant specifically requests that the product be judged under the current requirements. However, if the applicant elects this option, it should be noted that compliance with all the requirements in this Standard will be required as a condition of continued Listing and Follow-Up Services after the effective date, and understanding of this should be signified in writing.

Copyright © 2008 Underwriters Laboratories Inc.

UL COPYRIGHTED MATERIAL –
NOT AUTHORIZED FOR FURTHER REPRODUCTION OR
DISTRIBUTION WITHOUT PERMISSION FROM UL

Documents
Document Sharing Hub

Full document details: UL 1728 2008

This Standard consists of pages dated as shown in the following checklist:

Page	Date
1-6B	February 11, 2008
7-9	June 21, 2000
10	January 26, 2006
11-31	June 21, 2000
32-34B	February 11, 2008
35	June 21, 2000
36-36B	February 11, 2008
37	June 21, 2000
38-38B	February 11, 2008
39-41	June 21, 2000
42-44A	February 11, 2008
44B	January 26, 2006
45-46	June 21, 2000
47-48B	January 26, 2006
49-59	June 21, 2000
60-62B	February 11, 2008
63-74	June 21, 2000
75-76	February 11, 2008
77-87	June 21, 2000
88-88H	February 11, 2008
89-92	June 21, 2000
93-94B	February 11, 2008
95-96	June 21, 2000
97-98B	February 11, 2008
99-100	June 21, 2000
SA1-SA10	June 21, 2000
SB1-SB5	June 21, 2000
SB6	February 11, 2008
SC1-SC6	June 21, 2000
SD1-SD2	June 21, 2000
SE1-SE8	June 21, 2000
A1	January 26, 2006
A2	June 21, 2000
B1-B2	February 11, 2008
SR1-SR4	February 11, 2008

UL COPYRIGHTED MATERIAL –
NOT AUTHORIZED FOR FURTHER REPRODUCTION OR
DISTRIBUTION WITHOUT PERMISSION FROM UL
Documents
Document Sharing Hub
Full document details: UL 1728 2008

JUNE 21, 2000
(Title Page Reprinted: February 11, 2008)

ANSI/UL 1278-2008

1

UL 1278

Standard for Movable and Wall- or Ceiling-Hung Electric Room Heaters

First Edition – September, 1992
Second Edition – September, 1994

Third Edition

June 21, 2000

The most recent designation of ANSI/UL 1278 as an American National Standard (ANSI) occurred on February 7, 2008. The ANSI approval for this standard does not include the Cover Page, Transmittal Pages, or Title Page.

This ANSI/UL Standard for Safety, which consists of the Third edition with revisions through February 11, 2008, is under continuous maintenance, whereby each revision is ANSI approved upon publication.

An effective date included as a note immediately following certain requirements is one established by Underwriters Laboratories Inc. and is not part of the ANSI approved standard.

Revisions of this Standard will be made by issuing revised or additional pages bearing their date of issue. A UL Standard is current only if it incorporates the most recently adopted revisions, all of which are itemized on the transmittal notice that accompanies the latest set of revised requirements. Comments or proposals for revisions on any part of the Standard may be submitted to UL at any time. Proposals should be submitted via a Proposal Request in UL's On-Line Collaborative Standards Development System (CSDS) at http://csds.ul.com.

COPYRIGHT © 1992, 2008 UNDERWRITERS LABORATORIES INC.

UL COPYRIGHTED MATERIAL –
NOT AUTHORIZED FOR FURTHER REPRODUCTION OR
DISTRIBUTION WITHOUT PERMISSION FROM UL

Documents
Document Sharing Hub

Full document details: UL 1728 2008

No Text on This Page

UL COPYRIGHTED MATERIAL –
NOT AUTHORIZED FOR FURTHER REPRODUCTION OR
DISTRIBUTION WITHOUT PERMISSION FROM UL

Documents
Document Sharing Hub

Full document details: UL 1728 2008

CONTENTS

INTRODUCTION

1 Scope 11
2 General 11
2.1 General 11
2.2 Terminology 11
3 Glossary 11
4 Components 13
5 Units of Measurement 13
6 References 14

CONSTRUCTION

7 Enclosure 14
8 Accessibility of Live Parts 16
9 Accessibility of Moving Parts 23
10 Guarding of Heating Elements 24
10.1 General 24
10.2 Panel-type heaters 28
11 Parts Subject to Pressure 28
12 Polymeric Materials 30
13 Heat Transfer Fluids 30
13.1 General 30
14 Assembly of Components 31
15 Protection Against Corrosion 31
16 Supply Connections 32
16A Special Protection Devices 36
17 Current-Carrying Parts 36A
18 Internal Wiring 36A
18.1 General 36A
18.2 Protection of wiring 37
18.3 Wire connectors 38
18.4 Separation of circuits 38A
19 Heating Elements 39
20 Heating Element Supports 39
21 Electrical Insulation 39
22 Thermal Insulation 39
23 Materials in an Air-Handling Compartment 40
24 Motors 40
25 Motor Overload Protection 41
26 Overcurrent Protection 41
26.1 General 41
26.2 Heating elements 42
26.3 Motors and motor-circuits 43
26.4 Tapped high-voltage control circuits 43
26.5 High-voltage transformers 44
26.6 Low-voltage transformers 45
27 Secondary Circuits 45
27.1 General 45
27.2 Limited-energy-secondary circuits 46

UL COPYRIGHTED MATERIAL –
NOT AUTHORIZED FOR FURTHER REPRODUCTION OR
DISTRIBUTION WITHOUT PERMISSION FROM UL
Documents
Document Sharing Hub
Full document details: UL 1728 2008

28 Temperature Limiting Controls 47
29 Alarms 48
30 Lampholders 48A
31 Pilot Lights 49
32 Switches 50
33 Automatic Controls and Control Circuits 51
33.1 General 51
33.2 Terminals and actuating members of safety and temperature limiting controls 53
34 Spacings 53
35 Grounding 54

PERFORMANCE

36 General 55
37 Power Input Test 55
38 Leakage Current Test 55
39 Normal Temperature Tests 58
39.1 General 58
39.2 Temperature controls 62
39.3 Specified test conditions 62A
40 Alarm Device Endurance Test 63
41 Abnormal Operation Tests 63
41.1 General 63
41.2 Overvoltage test 65
41.3 Stalled-fan test 65
41.4 Tip-over test 65
41.5 Vertical-wall test 65
41.6 Terry cloth drape test 66
41.7 Terry cloth band drape test 67
41.8 Wall-hung heaters 69
41.9 Abnormal ambient test 71
41.10 Motor overload and stalled motor – motors protected by a remote protective device . 72
41.11 Impedance-protected motors 73
41.12 Motor connected across heating elements 73
42 Endurance Test 74
42.1 Temperature Control 74
42.2 Electrical wiring 74
43 Short Circuit Tests 76
44 Overload Test – High-Voltage Transformers 77
45 Burnout Test – High-Voltage Transformers 78
46 Component Failure Test 78
47 Dielectric Voltage-Withstand Test 79
48 Insulation Resistance Test 79
49 Water Spray Test 79
50 Stability of Movable Heaters 80
51 Element Support Impact Tests 80
52 Drop Test 83
53 Test for Permanence of Cord Tag 84
53.1 General 84
53.2 Test conditions 85
53.3 Test method 85
54 Protection Against Injury to Persons Test 85
55 Knob Securement Test 86

UL COPYRIGHTED MATERIAL –
NOT AUTHORIZED FOR FURTHER REPRODUCTION OR
DISTRIBUTION WITHOUT PERMISSION FROM UL
Documents
Document Sharing Hub
Full document details: UL 1728 2008

56 Strength of Adjustment Stop Test 86
57 Hydrostatic Test 87
58 Strain Relief Test 87
59 Permanence of Marking 88
59A Supply Cord Abrasion 88
59B Supply Cord Pinching – Mandrel 88A
59C Supply Cord Crushing - Mandrel 88C
59D Supply Cord Flexing 88D

MANUFACTURING AND PRODUCTION TESTS

60 Production-Line Dielectric Voltage-Withstand 88H
61 Production-Line Grounding Continuity 90
62 Production-Line Tip Over 90

RATINGS

63 Details 90

MARKINGS

64 Details 91
65 Instructions for Use and Care 95
65.1 General 95
65.2 Important instructions 96
65.3 User instructions 98
65.4 Grounding instructions 98A
65.5 Heater carton information 99

SUPPLEMENT SA - CERTAIN RADIANT ROOM HEATERS

INTRODUCTION

SA1 Scope SA1

CONSTRUCTION

SA2 Enclosure SA1
SA2.1 General SA1
SA2.2 Guards SA3
SA3 Stability SA3
SA4 Supply Connections SA3
SA5 Internal Wiring SA3
SA6 Automatic Controls and Control Circuits SA4
SA7 Spacings SA4

UL COPYRIGHTED MATERIAL –
NOT AUTHORIZED FOR FURTHER REPRODUCTION OR
DISTRIBUTION WITHOUT PERMISSION FROM UL
Documents
Document Sharing Hub
Full document details: UL 1728 2008

PERFORMANCE

SA8 General SA5
SA9 Normal Temperature Test SA5
SA9.1 General SA5
SA9.2 Normal temperature SA6
SA10 Padded Surface and Blanketing Test SA7
SA11 Curtain Drape Test SA8
SA12 Shredded Paper Test SA8

MANUFACTURING AND PRODUCTION TESTS

SA13 General SA8

MARKING

SA14 Details SA10

SUPPLEMENT SB - HEATERS INTENDED FOR USE IN BATHROOMS, LAUNDRY AREAS AND SIMILAR INDOOR LOCATIONS

INTRODUCTION

SB1 Scope SB1

CONSTRUCTION

SB2 Enclosure SB1
SB3 Current-Carrying Parts SB1
SB4 Thermal Insulation SB1
SB5 Immersion Detection Circuit Interrupters (IDCI'S) SB1
SB6 Ground Fault Circuit Interrupters (GFCI'S) SB2
SB7 Other Protective Devices SB2
SB8 Switches SB3
SB9 Grounding SB3

PERFORMANCE

SB10 Immersion Leakage Current Tests SB3
SB10.1 General SB3
SB10.2 Rising water immersion SB4
SB10.3 Drop immersion SB4
SB10.4 Tip-over immersion test SB4
SB10.5 Saturation immersion test SB4
SB11 Dew Point Test SB5
SB12 Splash Test SB5

UL COPYRIGHTED MATERIAL –
NOT AUTHORIZED FOR FURTHER REPRODUCTION OR
DISTRIBUTION WITHOUT PERMISSION FROM UL
Documents
Document Sharing Hub
Full document details: UL 1728 2008

MANUFACTURING AND PRODUCTION TESTS

SB13 Production Line Trip-Time Measurement SB5
SB14 Test Button Activation SB5

MARKINGS

SB15 Details SB6
SB16 Instructions for Use and Care SB6

UL COPYRIGHTED MATERIAL –
NOT AUTHORIZED FOR FURTHER REPRODUCTION OR
DISTRIBUTION WITHOUT PERMISSION FROM UL
Documents
Document Sharing Hub
Full document details: UL 1728 2008

No Text on This Page

UL COPYRIGHTED MATERIAL –
NOT AUTHORIZED FOR FURTHER REPRODUCTION OR
DISTRIBUTION WITHOUT PERMISSION FROM UL

Documents
Document Sharing Hub

Full document details: UL 1728 2008

SUPPLEMENT SC - MOVABLE ELECTRIC ROOM HEATERS WITH SEMICONDUCTOR HEATING ELEMENTS

INTRODUCTION

SC1 Scope SC1

CONSTRUCTION

SC2 Heating Element SC1
SC3 Fan Speed Control, Semiconductor Type SC1
SC4 Switches SC1

PERFORMANCE

SC5 General SC2
SC6 Input Test SC2
SC7 Normal Temperature Test SC2
SC8 Low Ambient Temperature Starting Test SC2
SC9 Restricted Inlet, Abnormal Operation Test SC2
SC10 DC Offset Voltage Temperature Test SC3
SC11 Fan Speed Controls, Abnormal Operation Tests SC4
SC12 Endurance Test SC4
SC13 Input Current Test SC5
SC14 Overload and Endurance Test SC5

SUPPLEMENT SD - FOLLOW-UP INSPECTION INSTRUCTIONS

Supplement SD deleted June 21, 2000

SUPPLEMENT SE - DIRECT PLUG-IN HEATERS

INTRODUCTION

SE1 Scope SE1

CONSTRUCTION

SE2 General SE1
SE3 Enclosure SE2
SE4 Input Connections SE2
SE5 Grounding SE5
SE6 Blade Secureness Test SE5
SE7 Security of Input Contacts Test SE5
SE8 Positioning SE5
SE9 Abuse Tests – General SE5

UL COPYRIGHTED MATERIAL –
NOT AUTHORIZED FOR FURTHER REPRODUCTION OR
DISTRIBUTION WITHOUT PERMISSION FROM UL
Documents
Document Sharing Hub
Full document details: UL 1728 2008

SE10 Abuse Tests – Impact Tests SE6
SE11 Abuse Tests – Rod Pressure SE6
SE12 Abuse Tests – Resistance to Crushing SE6
SE13 Abuse Tests – Switch Retainment SE6
SE14 Abuse Tests – Rotating Plug Assembly Torque Test SE7
SE15 Abuse Tests – Static Load-Retainer Plate SE7
SE16 Marking SE7
SE17 Limitations SE7
SE18 Abnormal Operation Tests SE7

APPENDIX A

Standards for Components. A1

APPENDIX B

Addendum to the Vertical Wall Test

UL COPYRIGHTED MATERIAL –
NOT AUTHORIZED FOR FURTHER REPRODUCTION OR
DISTRIBUTION WITHOUT PERMISSION FROM UL
Documents
Document Sharing Hub
Full document details: UL 1728 2008

No Text on This Page

UL COPYRIGHTED MATERIAL –
NOT AUTHORIZED FOR FURTHER REPRODUCTION OR
DISTRIBUTION WITHOUT PERMISSION FROM UL

Documents
Document Sharing Hub

Full document details: UL 1728 2008

This page intentionally left blank.

UL COPYRIGHTED MATERIAL –
NOT AUTHORIZED FOR FURTHER REPRODUCTION OR
DISTRIBUTION WITHOUT PERMISSION FROM UL

Documents
Document Sharing Hub

Full document details: UL 1728 2008

INTRODUCTION

1 Scope

1.1 These requirements cover movable and wall- or ceiling-hung electric room-heating equipment rated 600 volts or less to be employed in ordinary locations in accordance with the National Electrical Code, ANSI/NFPA 70.

1.2 These requirements do not cover fixed heaters, location-dedicated heaters, baseboard heaters, duct heaters, central-heating furnaces, fan-coil units, panel- or cable-type radiant-heating equipment, electric boilers, or any other electric heating equipment or appliances that are covered in or as a part of separate, individual requirements.

1.3 A product that contains features, characteristics, components, materials, or systems new or different from those covered by the requirements in this standard, and that involves a risk of fire or of electric shock or injury to persons shall be evaluated using appropriate additional component and end-product requirements to maintain the level of safety as originally anticipated by the intent of this standard. A product whose features, characteristics, components, materials, or systems conflict with specific requirements or provisions of this standard does not comply with this standard. Revision of requirements shall be proposed and adopted in conformance with the methods employed for development, revision, and implementation of this standard.

2 General

2.1 General

2.1.1 If the operation of a heater involves the generation and confining under pressure of steam or other gas, consideration is to be given to the possibility of risk of explosion incident to such operation. This applies in the case of an appliance having immersed electrodes, if the electrolysis of water may result in the accumulation of oxygen and hydrogen. The appliance is not acceptable unless its strength is such that it will withstand any risk of explosion that may be involved.

2.2 Terminology

2.2.1 Unless indicated otherwise, all voltage and current values mentioned in this standard are rms.

3 Glossary

3.1 For the purposes of this standard the following definitions apply.

3.2 ANGLE OF CRITICAL BALANCE – The minimum angle through which a heater must be tipped to cause it to tip over due solely to the force of gravity.

3.3 CHARRING WITH CROSSCHECKING – Manifestation of ignition by separation of wood fibers in the direction with the grain and also in the direction across the grain. See Appendix B , Addendum to the Vertical Wall Test.

3.4 COMMERCIAL/INDUSTRIAL HEATER – Any heater that is either:

a) Rated 2 kilowatts or greater and marked as a commercial/industrial heater in accordance with 64.10,

b) Rated greater than 250 volts,

UL COPYRIGHTED MATERIAL –
NOT AUTHORIZED FOR FURTHER REPRODUCTION OR
DISTRIBUTION WITHOUT PERMISSION FROM UL
Documents
Document Sharing Hub
Full document details: UL 1728 2008

c) A polyphase heater, or

d) Rated greater than 6 kilowatts.

3.5 CONTROL CIRCUIT – A circuit that carries the electric signals directing the operation of a controller which, in turn, governs power delivered to a motor or other load. A control circuit does not carry the main power current.

3.6 ELEVATED USE LOCATION – A stationary horizontal surface (for example, table, desk or shelf) where a heater is likely to be used if the heater weighs less than 8 lbs (3.6 kg), and:

a) The heater advertised as being suitable for use at an elevated location in literature or operating instructions furnished with the heater or by marking on the heater or its packaging, or

b) The overall dimensions of the heater, including any permanently extending handles, grilles, feet or stands do not exceed any one of the following:

1) Total added dimensions of length, height, and depth – 30 inches (76.2 cm).

2) Length – 24 inches (61 cm).

3) Height – 14 inches (35.6 cm).

3.7 FIXED HEATER – A heater that is fastened or otherwise assigned to a specific location, and is permanently wired to the branch circuit.

3.8 FLASH POINT – The minimum temperature of a flammable liquid at which sufficient vapor is given off to form an ignitable mixture with the air near the surface of the liquid or within the vessel used, as determined by appropriate test procedure and apparatus.

3.9 IGNITION – Glowing, emission of embers, or flaming of the materials described in 41.1.9 – 41.1.13. Charring without glowing or without emission of embers is not ignition.

3.10 LINE-VOLTAGE CIRCUIT – A circuit involving a potential of not more than 600 volts, and having circuit characteristics in excess of those of a low-voltage or an isolated-limited-secondary circuit.

3.11 LOCATION-DEDICATED HEATER – A cord-connected heater that is normally placed in one location for usage such as:

a) Cord-connected wall- or ceiling-mounted heater, or

b) Freestanding cord-connected heater that exceeds the weight and/or dimension limitations of a movable heater.

3.12 LOW-VOLTAGE (SECONDARY) CIRCUIT – A circuit involving a potential of not more than 30 volts alternating-current, (42.4 volt peak or direct-current), and supplied by a primary battery or by a standard Class 2 transformer, or by a combination of transformer and fixed impedance that, as a unit, complies with all the performance requirements for a Class 2 transformer. A circuit derived from a source of supply classified as a line voltage circuit, using resistance in series with the supply circuit as a means of limiting the voltage and current, is not considered to be a low voltage nor an isolated limited secondary circuit.

UL COPYRIGHTED MATERIAL –
NOT AUTHORIZED FOR FURTHER REPRODUCTION OR
DISTRIBUTION WITHOUT PERMISSION FROM UL
Documents
Document Sharing Hub
Full document details: UL 1728 2008

3.13 MOVABLE HEATER – A freestanding cord and plug connected heater that does not exceed 65 pounds (29.4 kg) and has no dimension greater than 8 feet (2.4 m).

3.14 TEMPERATURE CONTROLS – Devices that respond with a change in temperature (thermostatic devices) may be one of the following types:

a) Regulating – Functions only to regulate the temperature of the heater under intended conditions of use, and whose malfunction would not result in a risk of fire.

b) Limiting – Functions only under conditions that produce abnormal temperatures. The malfunction of such a device will result in a risk of fire.

c) Auxiliary – Thermostatic device other than of the regulating or limiting type.

3.15 VISIBLY GLOWING HEATING ELEMENT – A heating element whose visible portion attains a temperature of at least 650°C (1202°F) under intended conditions of operation.

3.16 WALL (OR CEILING) HUNG HEATER – A cord-connected heater having a mass not exceeding 50 pounds (22.7 kg) that is attached to the wall (or ceiling) in such a manner that it can be removed without the use of tools.

3.17 WALL (OR CEILING) MOUNTED HEATER – A heater that is permanently attached to the wall (or ceiling) in such a manner that tools are necessary for its removal.

4 Components

4.1 Except as indicated in 4.2, a component of a product covered by this Standard shall comply with the requirements for that component. See Appendix A for a list of standards covering components used in the products covered by this standard.

4.2 A component is not required to comply with a specific requirement that:

a) Involves a feature or characteristic not required in the application of the component in the product covered by this standard, or

b) Is superseded by a requirement in this standard.

4.3 A component shall be used in accordance with its rating established for the intended conditions of use.

4.4 Specific components are incomplete in construction features or restricted in performance capabilities. Such components are intended for use only under limited conditions, such as certain temperatures not exceeding specified limits, and shall be used only under those specific conditions.

5 Units of Measurement

5.1 Values stated without parentheses are the requirement. Values in parentheses are explanatory or approximate information.

UL COPYRIGHTED MATERIAL –
NOT AUTHORIZED FOR FURTHER REPRODUCTION OR
DISTRIBUTION WITHOUT PERMISSION FROM UL
Documents
Document Sharing Hub
Full document details: UL 1728 2008

6 References

6.1 Any undated reference to a code or standard appearing in the requirements of this standard shall be interpreted as referring to the latest edition of that code or standard.

CONSTRUCTION

7 Enclosure

7.1 The enclosure of a heater shall be so formed and assembled that it will have the strength and rigidity necessary to resist the abuses likely to be encountered during its intended service. The degree of resistance inherent in the appliance shall preclude total or partial collapse with the attendant reduction of spacings, loosening or displacement of parts, and other serious defects which alone or in combination constitute a risk of fire, electric shock, explosion, or injury to persons.

7.2 Among the factors taken into consideration if an enclosure is being judged for acceptability are its:

a) Mechanical strength,

b) Resistance to impact,

c) Moisture-absorption properties,

d) Flammability,

e) Resistance to corrosion, and

f) Resistance to distortion at temperatures

to which the enclosure may be subjected under conditions of intended or abnormal use. For the requirements for a polymeric enclosure or part of an enclosure of a polymeric material, see Polymeric Materials, Section 12.

7.3 The enclosure of a heater shall prevent molten metal, burning insulation, flaming particles, or similar material from falling on combustible materials, including the surface upon which the heater is supported.

7.4 The requirement in 7.3 necessitates use of a barrier:

a) Under a motor unless:

1) The structural parts of the motor or of the heater provide the equivalent of such a barrier.

2) The protection provided with the motor is such that no burning insulation or molten material falls to the surface that supports the heater if the motor is energized under each of the following fault conditions:

i) Open main winding,

ii) Open starting winding, and

iii) Starting switch short-circuited

UL COPYRIGHTED MATERIAL –
NOT AUTHORIZED FOR FURTHER REPRODUCTION OR
DISTRIBUTION WITHOUT PERMISSION FROM UL
Documents
Document Sharing Hub
Full document details: UL 1728 2008

3) The motor is provided with a thermal motor protector (a protective device that is sensitive to both temperature and current) that will prevent the temperature of the motor windings from becoming more than 125°C (257°F) under the maximum load under which the motor will run without causing the protector to cycle, and from becoming more than 150°C (302°F) with the rotor of the motor locked, or

4) The motor is impedance protected and the locked-rotor temperature of the motor winding is not more than 150°C (302°F) with the heater otherwise operating as intended.

b) Under wiring, unless the wire insulation is of the flame-retardant type, VW-1 (FR-1) or the equivalent.

It will also necessitate that a switch, transformer, relay, solenoid, or similar device be individually and completely enclosed except at terminals, unless it can be shown that malfunction of the component would not result in a risk of fire or unless there are no openings in the bottom of the enclosure. An opening in the bottom of the enclosure is not acceptable if it is located directly below field- or factory-made connections (splices) or overload or overcurrent protective devices.

7.5 Except as noted in 7.6, an opening for ventilation in the enclosure, other than in the bottom, of a heater and an opening associated with the dissipation of heated air from the element shall be provided with one or more baffles that will prevent the emission of flame, molten metal, burning insulation, or similar material from the heater.

7.6 In a compartment other than one that houses an overload or overcurrent protective device, the baffles mentioned in 7.5 may be omitted if:

a) No ventilating opening in a vertical wall, other than one associated with the dissipation of heated air from the elements during intended operation of the heater, is more than 3/8 inch (9.5 mm) in width, or

b) The heater is constructed to be acceptable for the purpose, as shown by appropriate investigation.

7.7 Cast- and sheet-metal portions of the enclosure shall not be thinner than indicated in Table 7.1 unless the enclosure is found to be acceptable when judged under considerations such as are mentioned in 7.2 and 7.8.

UL COPYRIGHTED MATERIAL –
NOT AUTHORIZED FOR FURTHER REPRODUCTION OR
DISTRIBUTION WITHOUT PERMISSION FROM UL
Documents
Document Sharing Hub
Full document details: UL 1728 2008

Table 7.1
Minimum acceptable thicknesses of enclosure metal

Metal	At small, flat, unreinforced surfaces and at surfaces that are reinforced by curving, ribbing, and similar means (or are otherwise of a shape, size or both) to provide mechanical strength		At relatively large unreinforced flat surfaces	
	Inches	mm	Inches	mm
Die-cast metal	3/64	1.2	5/64	2.0
Cast malleable iron	1/16	1.6	3/32	2.4
Other cast metal	3/32	2.4	1/8	3.2
Uncoated sheet steel	0.026[a]	0.66[a]	–	–
Galvanized sheet steel	0.029[a]	0.74[a]	–	–
Nonferrous sheet metal	0.036[a]	0.91[a]	–	–

[a] Thinner sheet metal may be employed if found to be acceptable when the enclosure is judged under considerations such as those mentioned in 7.2 and 7.8.

7.8 In addition to being considered with reference to the factors mentioned in 7.2, an enclosure of sheet metal is to be judged with respect to its size and shape, the thickness of metal, and its acceptability for the particular application, considering the intended use of the heater.

7.9 At points where the face of an attachment-plug receptacle projects through it, the enclosure of a heater shall have a thickness not less than:

a) 0.032 inch (0.81 mm) if of ferrous metal,

b) 0.045 inch (1.14 mm) if of nonferrous metal, and

c) 0.10 inch (2.5 mm) if of insulating material, except that an enclosure of insulating material may be of lesser thickness if formed or reinforced to provide physical strength. The insulating material shall be noncombustible.

8 Accessibility of Live Parts

8.1 An electrical part of a heater shall be so located or enclosed that protection against unintentional contact with uninsulated live parts will be provided, except that this requirement does not apply to a visibly glowing open-wire element and the connections immediately adjacent to the element. See 3.1, 8.2, 32.7 and 32.14. Insulated motor brush caps do not require additional enclosures.

8.2 The requirement in 8.1 does not apply to the sheath of an isolated metal-clad element in a heater having provision for grounding the enclosure, although such a sheath is considered to be a bare live part when spacings are being measured.

8.3 In determining if an opening in an enclosure is acceptable, consideration is to be given to:

a) The proximity of uninsulated live parts (as determined by applying 8.1, 8.2, 8.4, 8.5, and 8.15 and

b) The possibility of the emission of burning insulation, molten metal, and similar materials through the opening (as determined by applying 7.3 – 7.6.)

UL COPYRIGHTED MATERIAL –
NOT AUTHORIZED FOR FURTHER REPRODUCTION OR
DISTRIBUTION WITHOUT PERMISSION FROM UL
Documents
Document Sharing Hub
Full document details: UL 1728 2008

8.4 To reduce the likelihood of unintentional contact that may involve a risk of electric shock from an uninsulated live part or film-coated wire, an opening in an enclosure shall comply with either (a) or (b).

a) For an opening that has a minor dimension (see 8.8) less than 1 inch (25.4 mm), such a part or wire shall not be contacted by the probe illustrated in Figure 8.3.

b) For an opening that has a minor dimension of 1 inch or more, such a part or wire shall be spaced from the opening as specified in Table 8.1.

Exception: An integral enclosure of a motor need not comply with these requirements if it complies with the requirements in 8.5.

8.5 With respect to a part or wire as mentioned in 8.4, in an integral enclosure of a motor as mentioned in the exception to 8.4:

a) An opening that has a minor dimension (see 8.8) less than 3/4 inch (19.1 mm) is acceptable if:

1) Film-coated wire cannot be contacted by the probe illustrated in Figure 8.2;

2) In a directly accessible motor (see 8.9), an uninsulated live part cannot be contacted by the probe illustrated in Figure 8.4; or

3) In an indirectly accessible motor (see 8.9), an uninsulated live part cannot be contacted by the probe illustrated in Figure 8.1.

b) An opening that has a minor dimension of 3/4 inch (15.1 mm) or more is acceptable if a part or wire is spaced from the opening as specified in Table 8.1.

Table 8.1
Minimum acceptable distance from an opening to a part that may involve a risk of electric shock

Minor dimension[a] of opening		Minimum distance from opening to part	
Inches[b]	mm[b]	Inches[b]	mm[b]
3/4[c]	(19.1	4-1/2	(114.0)
1[c]	(25.4)	6-1/2	(165.0)
1-1/4	(31.8)	7-1/2	(190.0)
1-1/2	(38.1)	12-1/2	(318.0)
1-7/8	(47.6)	15-1/2	(394.0)
2-1/8	(54.0)	17-1/2	(444.0)
d		30	(726.0)

[a] See 8.8.
[b] Between 3/4 inch and 2-1/8 inches, interpolation is to be used to determine a value between values specified in the table.
[c] Any dimension less than 1 inch applies to a motor only.
[d] More than 2-1/8 inches, but not more than 6 inches (152.0 mm).

8.6 The probes mentioned in 8.4 and 8.5 and illustrated in Figures 8.1, 8.2, 8.3, and 8.4 shall be applied to any depth that the opening will permit; and shall be rotated or angled before, during, and after insertion through the opening to any position that is necessary to examine the enclosure. The probes illustrated in Figures 8.3 and 8.4 shall be applied in any possible configuration; and, if necessary, the configuration shall be changed after insertion through the opening.

UL COPYRIGHTED MATERIAL –
NOT AUTHORIZED FOR FURTHER REPRODUCTION OR
DISTRIBUTION WITHOUT PERMISSION FROM UL
Documents
Document Sharing Hub
Full document details: UL 1728 2008

Figure 8.1
Probe for uninsulated live parts

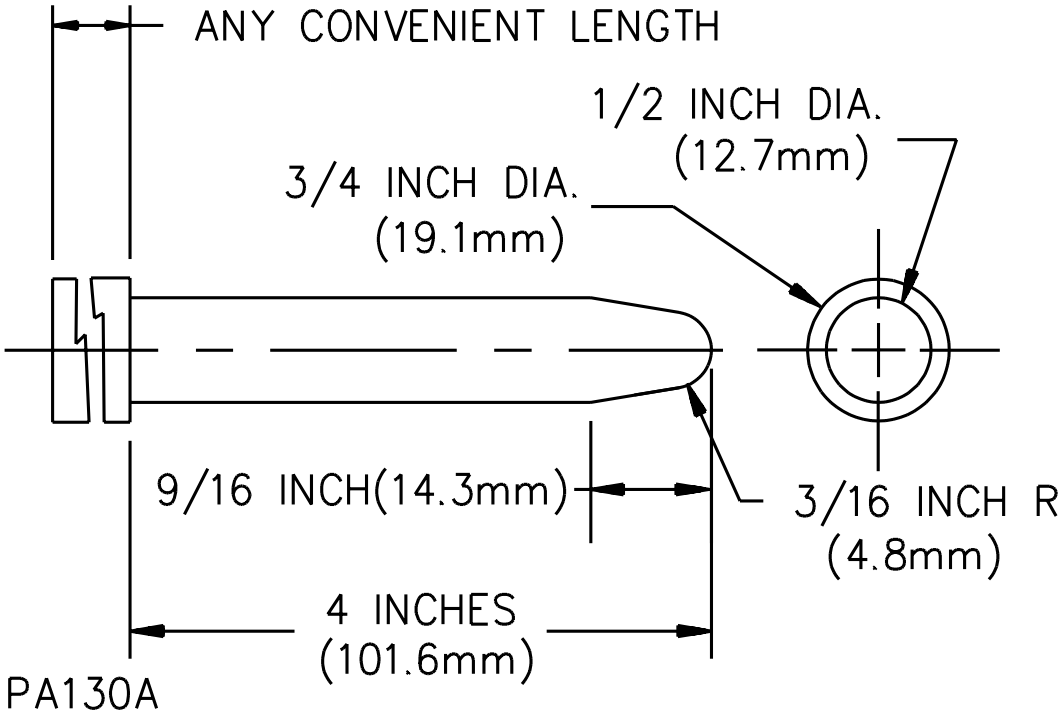

Figure 8.2
Probe for film-coated wire

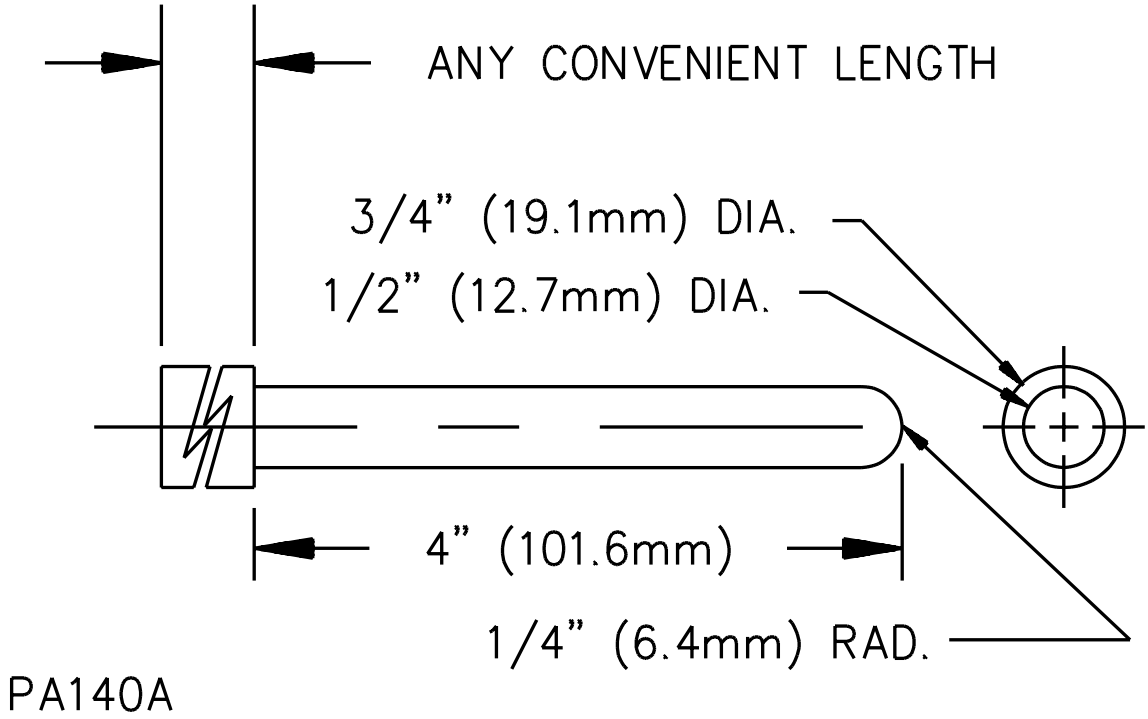

UL COPYRIGHTED MATERIAL –
NOT AUTHORIZED FOR FURTHER REPRODUCTION OR
DISTRIBUTION WITHOUT PERMISSION FROM UL
Documents
Document Sharing Hub
Full document details: UL 1728 2008

8.7 The probes mentioned in 8.6 and 8.8 shall be used as measuring instruments to judge the accessibility provided by an opening, and not as instruments to judge the strength of a material; they shall be applied with a force of 1 lb (4.4 N) through any opening.

8.8 With reference to the requirements in 8.4 and 8.5, the minor dimension of an opening is the diameter of the largest cylindrical probe having a hemispherical tip that can be inserted through the opening.

8.9 With reference to the requirements in 8.5, an indirectly accessible motor is a motor:

a) That is accessible only by opening or removing a part of the outer enclosure, such as a guard or panel, that can be opened or removed without using a tool, or

b) That is located at such a height or is otherwise guarded or enclosed so that it is unlikely to be contacted.

A directly accessible motor is a motor:

c) That can be contacted without opening or removing any part, or

d) That is located so as to be accessible to contact.

8.10 During the examination of a heater in connection with the requirements in 8.1 – 8.9, a part of the outer enclosure that may be removed without the use of tools by the user of the heater (to permit the attachment of accessories, to allow access to means for making operating adjustments, or for other reasons) is to be disregarded – that is, it will not be assumed that the part in question affords protection against the risk of electric shock. A warning marking such as that specified in 64.5 is not considered to adequately protect against this risk of electric shock.

8.11 With reference to the requirements in 8.4 and 8.5, insulated brush caps are not required to be additionally enclosed.

8.12 During the examination of a heater in connection with the requirements in 8.1 – 8.9, a part of the outer enclosure that is removed with the use of tools by the user of the heater to permit resetting of the resettable temperature control is to be disregarded – that is, it will not be assumed that the part in question affords protection against the risk of electric shock, or injury to persons. A warning marking such as that specified in 64.5 is not considered to adequately protect against this risk of electric shock, or injury to persons.

Exception: A heater marked in accordance with 64.4 and that complies with 8.13 need not comply with this requirement.

8.13 A product may employ a resettable temperature control when the reset means is inaccessible if designed in a manner that the product cannot be disassembled with readily available tools, such as screw drivers, wrenches, and similar tools, and the product is marked in accordance with 64.4. Such fasteners as rivets, one way screws, fasteners not readily accessible after assembly, and similar fasteners would be considered as causing the product to be not readily disassembled.

8.14 Any manual adjustable controls shall be resettable or adjustable so that electrical or moving parts will not cause a risk of fire, or electric shock, to occur during the resetting or adjustment procedure. See Figure 8.5 and 8.10 and 8.12.

UL COPYRIGHTED MATERIAL –
NOT AUTHORIZED FOR FURTHER REPRODUCTION OR
DISTRIBUTION WITHOUT PERMISSION FROM UL
Documents
Document Sharing Hub
Full document details: UL 1728 2008

Figure 8.3
Articulate probe with web stop

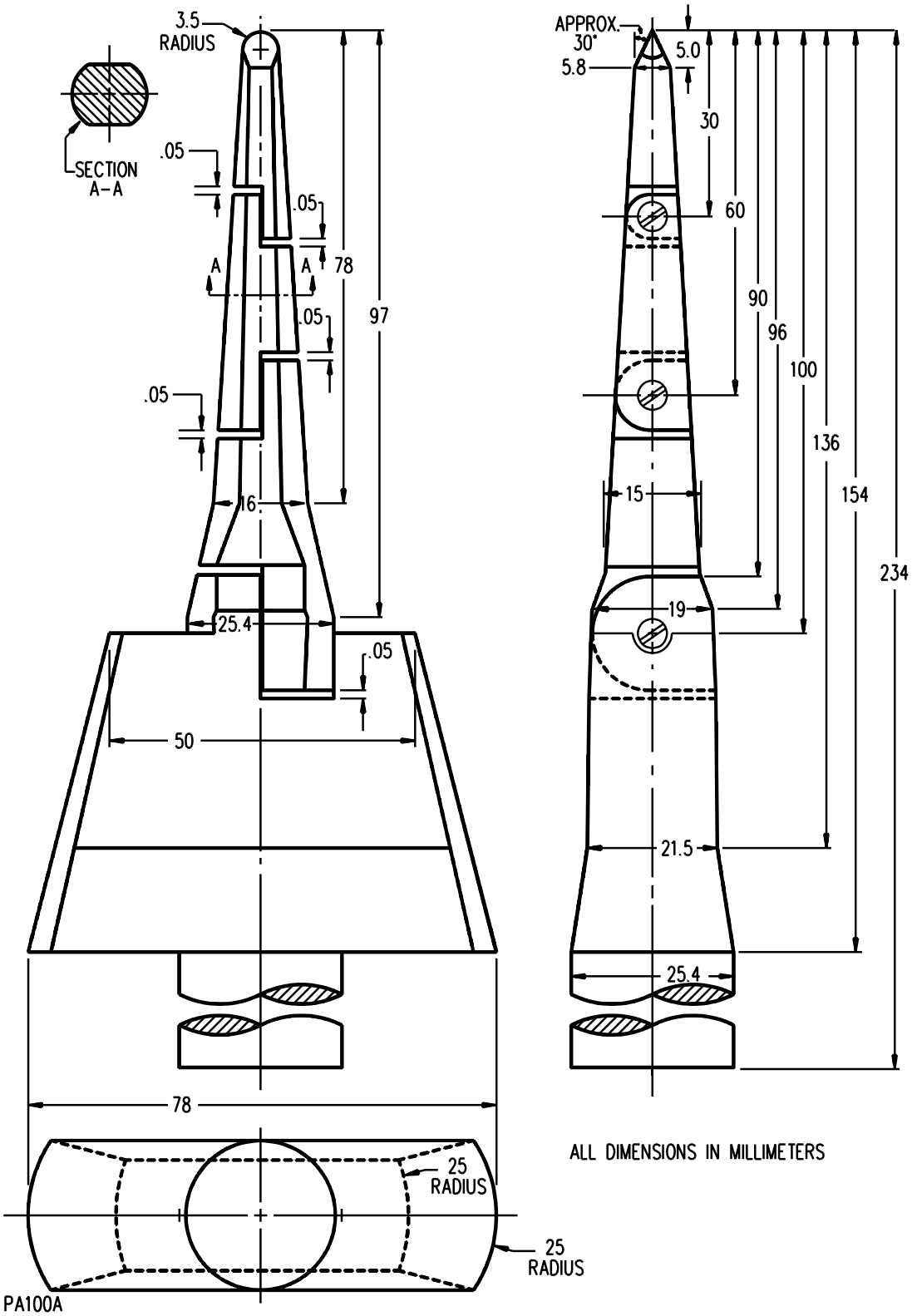

UL COPYRIGHTED MATERIAL –
NOT AUTHORIZED FOR FURTHER REPRODUCTION OR
DISTRIBUTION WITHOUT PERMISSION FROM UL

Documents
Document Sharing Hub

Figure 8.4
Articulate probe

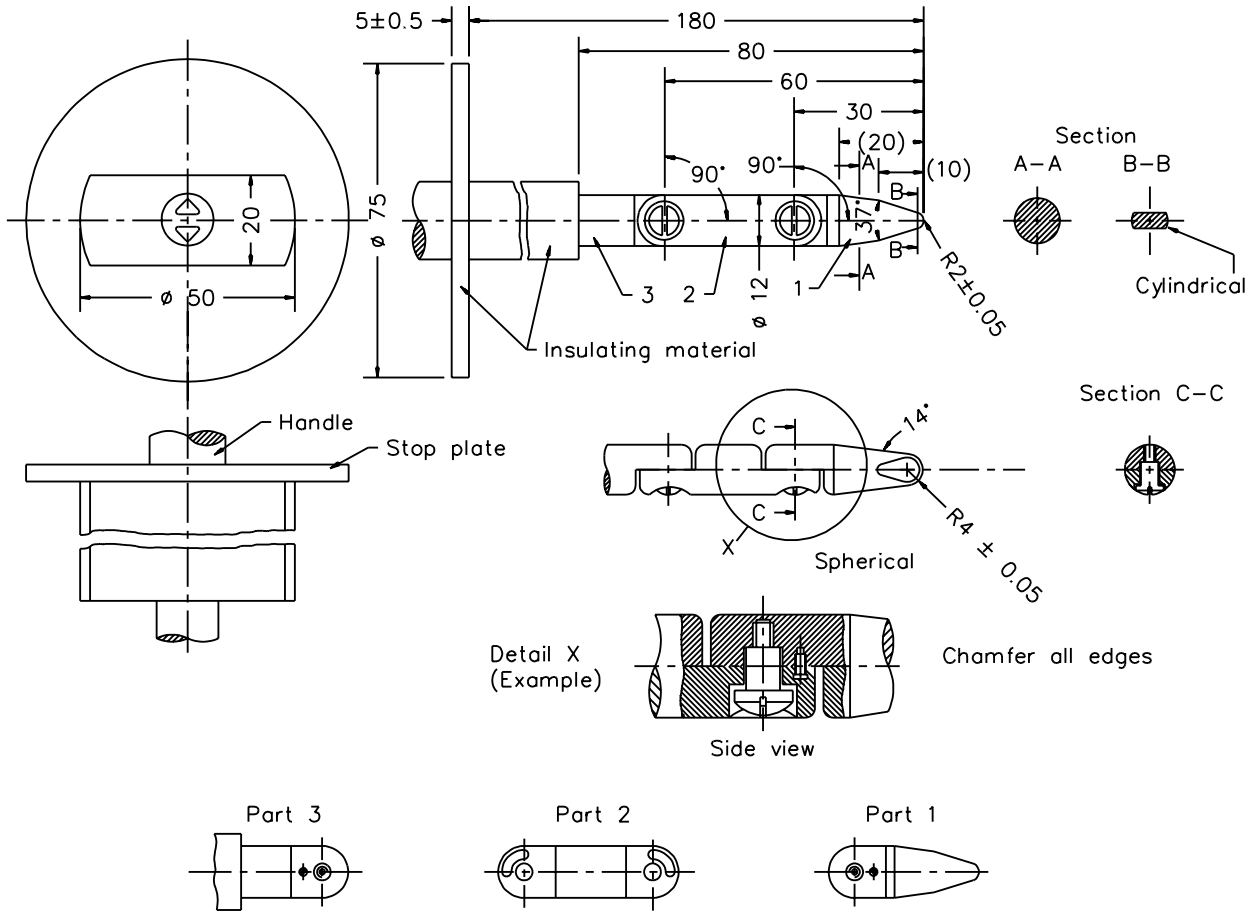

SA1788A

All dimensions in millimeters

UL COPYRIGHTED MATERIAL –
NOT AUTHORIZED FOR FURTHER REPRODUCTION OR
DISTRIBUTION WITHOUT PERMISSION FROM UL
Documents
Document Sharing Hub

8.15 An uninsulated live part shall not be located behind an opening that may be used to make a user service function such as adjusting or resetting a manual limit control if a 1/8-inch (3.2-mm) diameter straight rod can be made to touch the live part when the rod is inserted through the opening and moved to all positions possible without producing an angle of more than 30 degrees between the rod and the line drawn between the center of the opening and the center of the face of the part to be adjusted. The length of the rod beyond the opening is not to exceed the distance between the opening and the face of the adjustable mechanism by more than 3 inches (76 mm). See Figure 8.5.

8.16 The door or cover of an enclosure shall be provided with means for holding it securely in place in the closed position.

8.17 The door or cover of an enclosure shall be hinged if it gives access to any fuse, circuit breaker, or manually resettable temperature control and if uninsulated live parts are exposed during the replacement of the fuse or resetting of the manually resettable temperature control. Such a door or cover shall also be provided with a latch or the equivalent and a captive screw to secure the door or cover in place.

Figure 8.5
Accessibility of live or moving part through enclosure opening

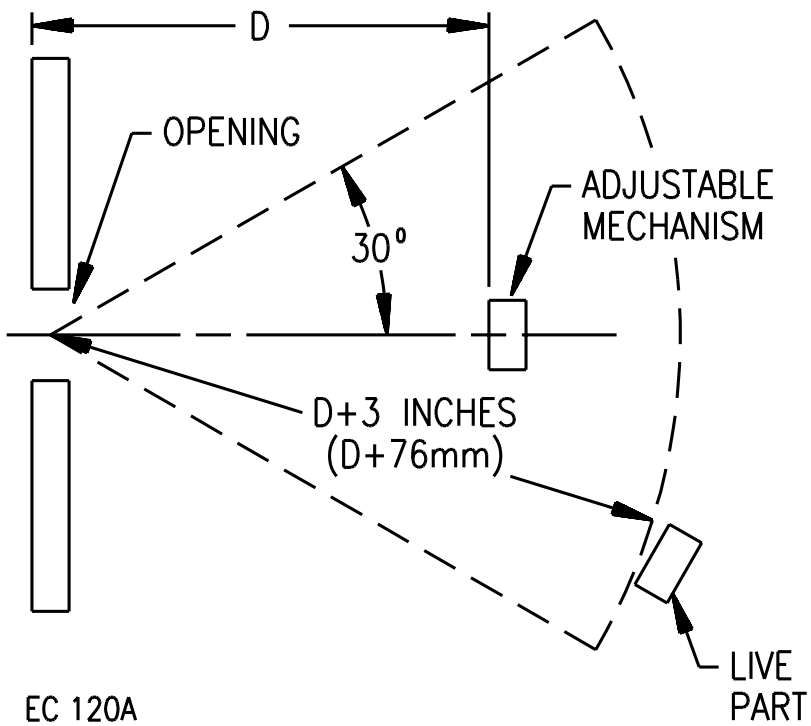

8.18 A door or cover giving access to any overload-protective device in other than a low-voltage circuit shall be tight fitting and shall suitably overlap the surface of the enclosure around the opening.

8.19 A spring latch, a magnetic latch, a dimple, or any other mechanical arrangement that will hold the door in place and would require some effort on the user's part to open it is considered to be an acceptable means for holding the door in place as required in 8.17.

UL COPYRIGHTED MATERIAL –
NOT AUTHORIZED FOR FURTHER REPRODUCTION OR
DISTRIBUTION WITHOUT PERMISSION FROM UL
Documents
Document Sharing Hub
Full document details: UL 1728 2008

8.20 A component of a heater that is likely to need inspection, replacement, cleaning, or other servicing shall be as accessible as practicable, and shall be accessible without the use of special tools if it is intended to be manually operated or adjusted or if it will definitely require periodic servicing.

9 Accessibility of Moving Parts

9.1 The rotor of a motor, a pulley, a belt, a gear, a fan, or other moving parts shall be enclosed or guarded to reduce the risk of injury to persons.

Exception: This requirement does not apply to a part or portion of a part that must be exposed to enable a heater to perform its intended function.

9.2 A fan blade shall be constructed of a material and in such a manner to reduce the risk of its breakage or its release of parts that could cause a risk of injury to persons.

9.3 The portion of a fan blade that can cause a risk of injury to persons shall be guarded so that the probe shown in Figure 9.1 cannot touch the part when inserted with a force of 1 lb (4.4 N) through any opening in the guard.

9.4 If a part used to comply with the requirement in 9.3 is made of a polymeric material, a piece of the material is to be re-examined for compliance with this requirement after being subjected to the Mold Stress-Relief Distortion Test as described in the Standard for Polymeric Materials – Use in Electrical Equipment Evaluations, UL 746C. See 12.1. While in the oven the part is to be assembled to the heater and the heater is to be in its intended operating position.

Figure 9.1
Probe for fan blades of air heaters

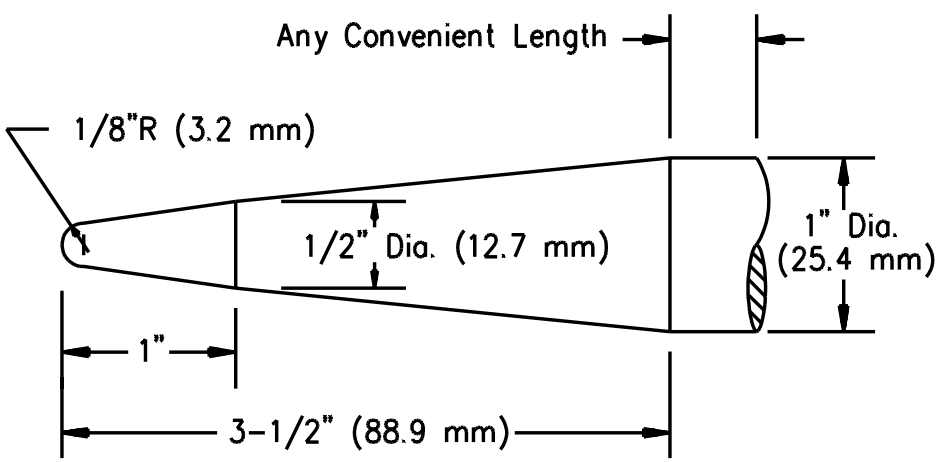

PA 160

UL COPYRIGHTED MATERIAL –
NOT AUTHORIZED FOR FURTHER REPRODUCTION OR
DISTRIBUTION WITHOUT PERMISSION FROM UL
Documents
Document Sharing Hub
Full document details: UL 1728 2008

9.5 A guard employed to comply with the requirement in 9.3 shall be either attached to the heater or shall require the use of a tool or tools for removal.

9.6 An enclosure, a frame, a guard, a handle, or other part of the heater that is exposed to contact during intended operation shall not be sufficiently sharp to constitute a risk of injury to persons.

9.7 Any manual adjustable controls shall be resettable or adjustable so that moving parts will not cause a risk of injury to persons to occur during the resetting or adjustment procedure. See Figure 8.5, 8.10 and 8.12.

10 Guarding of Heating Elements

10.1 General

10.1.1 The heating element and any part of the element assembly (such as an element support, sheath, and similar parts) shall be so guarded that flammable material as well as persons will be protected against contacting it.

10.1.2 Any heater projections such as guards or grilles that are intended to guard hot heater surfaces shall be positively secured to the heater such as by screws, rivets or welding or being engaged in slots so that they cannot be removed without the use of tools, breaking or permanent bending or distortion.

10.1.3 The acceptability of a guard is judged with respect to its general serviceability and with respect to the shape and size or both of the openings in it, in conjunction with the distance of the guard from the heating element and the other high-temperature parts mentioned in 10.1.1. Except as noted in 10.1.5, an opening in a guard is considered to be acceptable if, with the heater in any intended operating position, the following conditions are met:

a) The shape and size of an opening are such that a test gauge in the form of a right-circular cone having a base diameter of 2-3/4 inches (69.9 mm) and an altitude of 5-1/2 inches (139.7 mm), see Figure 10.1, is prevented from touching the heating element and the other high-temperature parts when the cone probe is inserted, apex first, in any manner. See 10.1.4.

b) The shape and size of an opening which permits the vertically downward entrance of a bar probe 1/2 inch (12.7 mm) wide and 1/16 inch (1.6 mm) thick, see Figure 10.2, are such that a triangle probe 1/16 inch thick and in the form of an isosceles triangle having a base of 2-3/4 inches and an altitude of 5-1/2 inches, see Figure 10.3, is prevented from touching the heating element and the other high-temperature parts when the triangle probe is inserted, apex first, in any manner. The testing of an opening with the triangle probe applies also where the vertically downward insertion of the bar is prevented by the construction of the guard, the use of an additional barrier, or both, unless the vertically applied bar tends to be deflected outward – that is, away from the guard.

c) The area of an opening in a substantially vertical face of a guard is not more than 3-1/4 square inches (2100 mm^2) if the size and/or shape of the opening permits the entrance from any horizontal direction of a vertically oriented rod probe 1/16 inch in diameter and 2-3/4 inch long, see Figure 10.4. Also, see Figure 10.5.

UL COPYRIGHTED MATERIAL –
NOT AUTHORIZED FOR FURTHER REPRODUCTION OR
DISTRIBUTION WITHOUT PERMISSION FROM UL
Documents
Document Sharing Hub
Full document details: UL 1728 2008

Figure 10.1
Cone probe

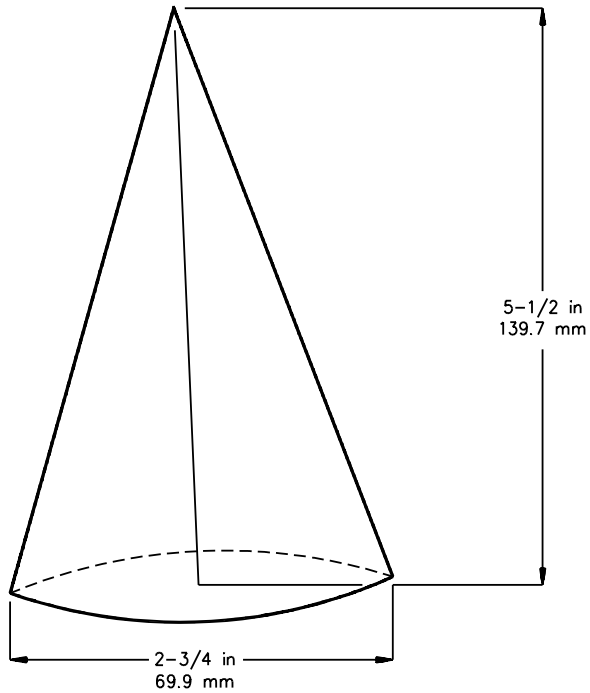

SM206

Figure 10.2
Bar probe

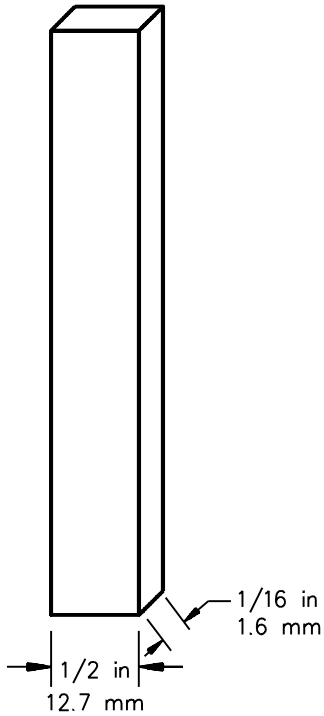

SM207

UL COPYRIGHTED MATERIAL –
NOT AUTHORIZED FOR FURTHER REPRODUCTION OR
DISTRIBUTION WITHOUT PERMISSION FROM UL
Documents
Document Sharing Hub
Full document details: UL 1728 2008

Figure 10.3
Triangle probe

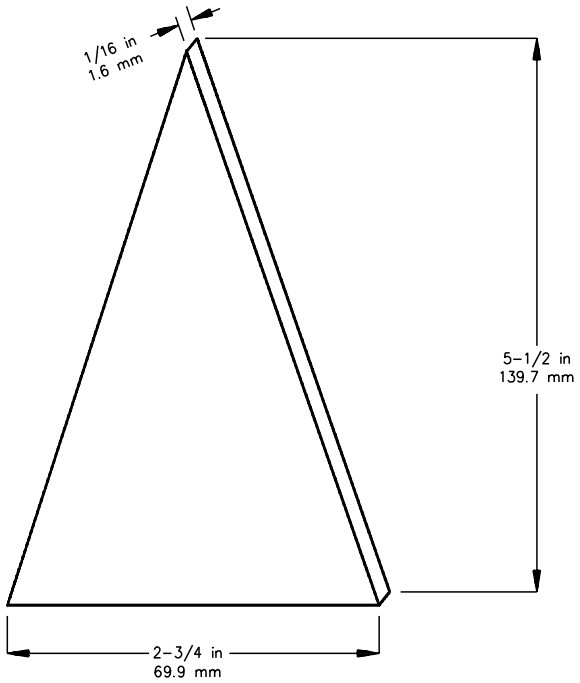

Figure 10.4
Rod probe

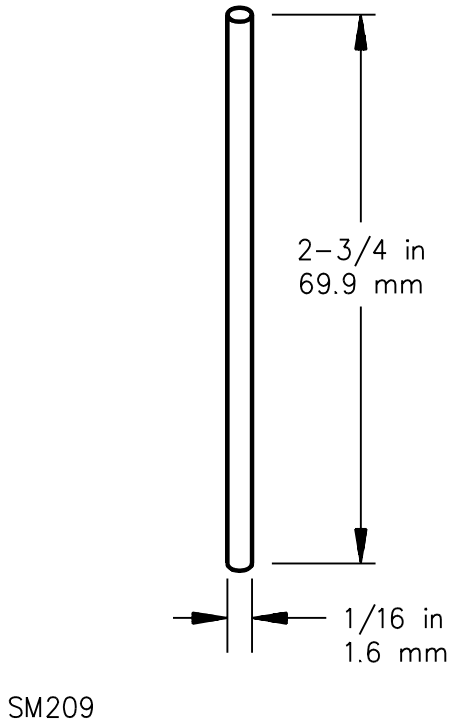

UL COPYRIGHTED MATERIAL –
NOT AUTHORIZED FOR FURTHER REPRODUCTION OR
DISTRIBUTION WITHOUT PERMISSION FROM UL
Documents
Document Sharing Hub
Full document details: UL 1728 2008

Figure 10.5
Guarding of heating elements

Application of bar gauge and rod gauge

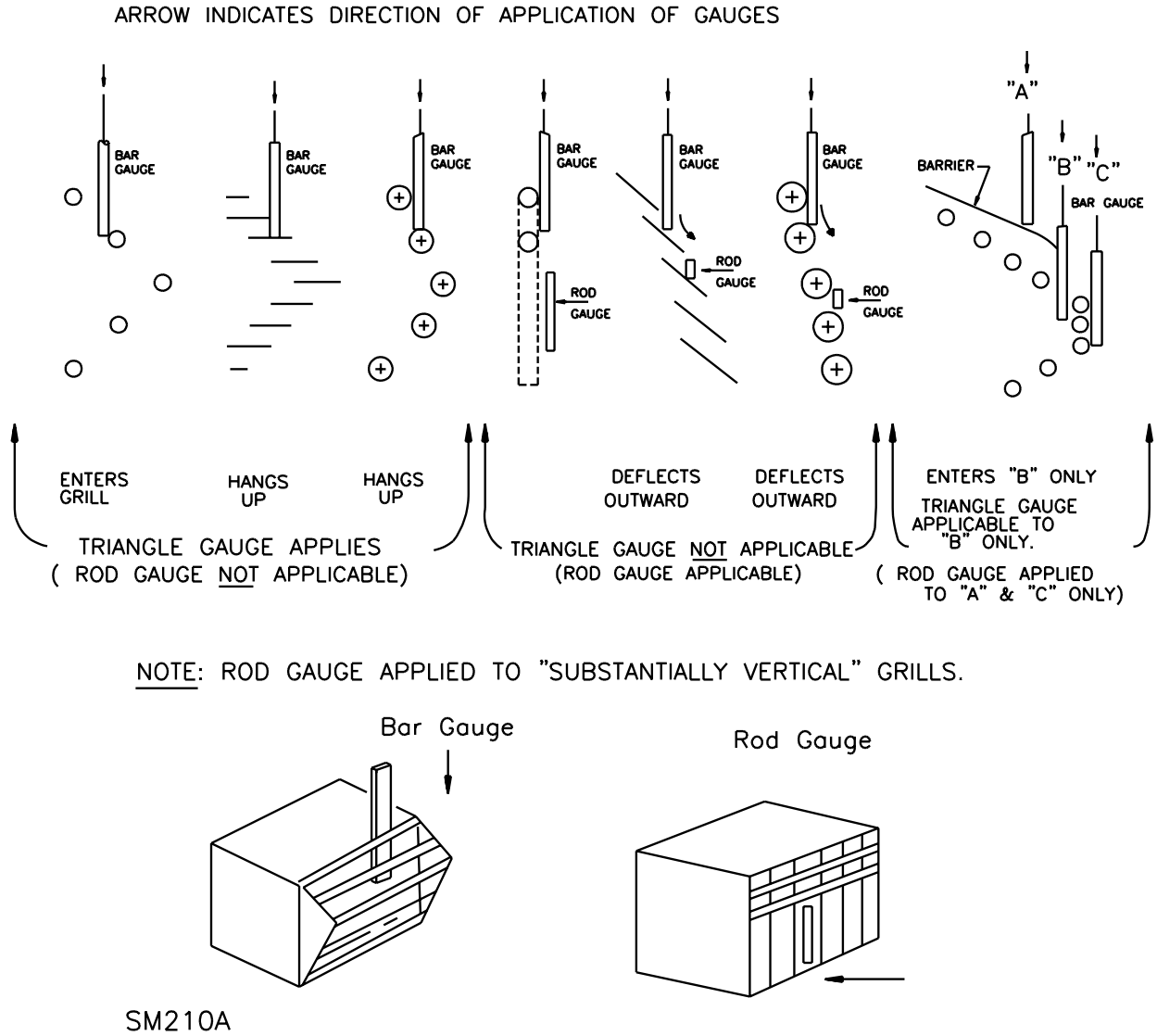

UL COPYRIGHTED MATERIAL –
NOT AUTHORIZED FOR FURTHER REPRODUCTION OR
DISTRIBUTION WITHOUT PERMISSION FROM UL
Documents
Document Sharing Hub
Full document details: UL 1728 2008

10.1.4 The fins of a metal-clad element are considered to be element-guarding members, and need not comply with the provisions in 10.1.3(a) if the temperature of the exposed edges (outer perimeter) of the fins is not more than 280°C (536°F).

10.1.5 Openings in the guard complying only with of 10.1.3(a) are acceptable for the following:

a) Except for a panel-type heater (see 10.2.1), an air heater in which the temperature of the heating element is not higher than 280°C (536°F) under conditions of intended operation, or

b) A fan-type heater in which the fan is always in operation when the heating element is on (energized) and the air current prevents clothing and the like from entering the guard.

10.1.6 A guard shall comply with one of the following if the switching arrangement on a grounded heater does not comply with 32.14 or the design employs a through-cord switch as described in 32.15.

a) No opening in the guard will permit passage of a rod having a diameter of 3/8 inch (9.5 mm).

b) No opening in the guard will permit passage of a rod having a diameter of 3/4 inch (19.1 mm) and no uninsulated live part or isolated metal-clad element is less than 4 inches (102 mm) from the nearest point on the guard at any opening which will permit the entrance of a rod having a diameter of 3/8 inch (9.5 mm).

10.1.7 If a heater is required to have a guard, and if the guard is readily removable, the heater and the guard shall be contained in the same carton as shipped from the factory. See also 64.17.

10.1.8 A heater in which the heating element is constructed for use only in an air current shall be so wired or controlled that the element can be operated only while under the cooling effect of the air stream. A heater in which the cooling effect of the motion of a part is necessary to limit temperatures shall be so wired or controlled that the element cannot be operated without such motion.

10.2 Panel-type heaters

10.2.1 A panel-type heater shall be provided with a guard that will prevent a test surface, in the form of a 6-inch square (a square 152 mm on a side) parallel to the element panel, from being brought closer than 1/2 inch (12.7 mm) to the plane of the front of the heater, excluding the guard.

Exception No. 1: A heater having an element panel operating at a temperature higher than 280°C (536°F) shall be guarded as described in 10.1.3.

Exception No. 2: A heater that will not cause glowing or flaming of the cheesecloth or the felt when subjected to the padded surface and blanketing test in 41.8.2.

11 Parts Subject to Pressure

11.1 Except as noted in 11.2 a pressure vessel having an inside diameter, width, height or cross-section diagonal of more than 6 inches (152 mm) with no limitation on length of vessel and subject to a pressure of more than 15 pounds force per square inch gauge (psig) (103 kilonewtons per square meter or 105 grams force per square millimeter) shall be certified by the National Board of Boiler and Pressure-Vessel Inspectors and marked in accordance with the appropriate boiler and pressure vessel code symbol of the American Society of Mechanical Engineers (ASME) – ″H ″, ″M ″, ″S ″, or ″U ″ – for a working pressure not less than the pressure determined by applying 11.2.

UL COPYRIGHTED MATERIAL –
NOT AUTHORIZED FOR FURTHER REPRODUCTION OR
DISTRIBUTION WITHOUT PERMISSION FROM UL
Documents
Document Sharing Hub
Full document details: UL 1728 2008

11.2 Except as noted in 11.3, a part of a heater that is subject to pressure (including the vapor pressure of a superheated fluid) shall comply with the Hydrostatic Test, Section 57.

11.3 A test need not be performed to determine whether or not a part complies with the requirement in 11.2 if the strength of the part is acceptable for the purpose as a result of its material and dimension – for example, copper or steel pipes of standard sizes and provided with standard fittings might be considered to have the necessary strength if they comply with Table 11.1.

Table 11.1
Minimum wall thickness[a] for copper and steel tubing

Outside diameter		Copper				Steel	
		Protected within the enclosure		Unprotected			
inches	mm	inches	mm	inches	mm	inches	mm
1/4	6.35	0.0245	0.623	0.0265	0.673	0.025	0.635
5/16	7.94	0.0245	0.623	0.0265	0.673	0.025	0.635
3/8	9.53	0.0245	0.623	0.0265	0.673	0.025	0.635
1/2	12.70	0.0245	0.623	0.0285	0.724	0.025	0.635
5/8	15.88	0.0315	0.799	0.0315	0.799	0.032	0.813
3/4	19.05	0.0315	0.799	0.0385	0.978	0.032	0.813
7/8	22.23	0.0410	1.041	0.0410	1.041	0.046	1.168
1	25.40	0.0460	1.168	0.0460	1.168	–	–
1-1/8	28.58	0.0460	1.168	0.0460	1.168	0.046	1.168
1-1/4	31.75	0.0505	1.283	0.0505	1.283	0.046	1.168
1-3/8	34.93	0.0505	1.283	0.0505	1.283	–	–
1-1/2	38.10	0.0555	1.410	0.0555	1.410	0.062	1.575
1-5/8	41.28	0.0555	1.410	0.0555	1.410	–	–
2-1/8	53.98	0.0640	1.626	0.0640	1.626	–	–
2-5/8	66.68	0.0740	1.880	0.0740	1.880	–	–

[a] Nominal wall thickness of tubing will have to be greater than the thickness indicated to maintain the minimal wall thickness.

11.4 A means for safely relieving pressure shall be provided for all parts in which pressure might be generated in the event of fire.

11.5 Pressure-relief devices (see 11.10), fusible plugs, soldered joints, spot or rolled weld joints, nonmetallic tubing, or other equivalent pressure-relief means may be employed to comply with the requirement in 11.4.

11.6 There shall be no shut-off valve between the pressure relief means and the parts that it is intended to protect.

11.7 A vessel having an inside diameter, width, height or cross-section diagonal of more than 3 inches (76.2 mm) and subject to air or steam pressure generated or stored within the appliance shall be protected by a pressure-relief device.

11.8 The start-to-discharge pressure setting of the pressure-relief device shall not be higher than the maximum working pressure of the vessel. The discharge rate of the device shall be great enough to relieve the pressure.

UL COPYRIGHTED MATERIAL –
NOT AUTHORIZED FOR FURTHER REPRODUCTION OR
DISTRIBUTION WITHOUT PERMISSION FROM UL
Documents
Document Sharing Hub
Full document details: UL 1728 2008

11.9 A pressure-relief device shall:

a) Be connected as close as possible to the pressure vessel or parts of the system that it is intended to protect,

b) Be so installed that it is accessible for inspection and repair and cannot be readily rendered inoperative,

c) Have its discharge opening so located and directed that the risk of scalding has been reduced to an acceptable degree, and

d) Have its discharge opening so located and directed that operation of the device will not deposit moisture on uninsulated live parts, or on insulation or components affected detrimentally by moisture.

11.10 A pressure-relief device having an adjustable setting is to be judged on the basis of its maximum setting unless the adjusting means is sealed at a lower setting.

11.11 A pressure-relief device is considered to be a pressure-actuated valve or rupture member designed to relieve excessive pressures automatically.

11.12 If a pressure-relief device is required, the electrical control responsible for limiting the pressure in the vessel shall be capable of performing under rated load for 100,000 cycles of operation and shall prevent the pressure from exceeding 90 percent of the relief-device setting under any condition of intended operation.

12 Polymeric Materials

12.1 Determination of the acceptability of a polymeric material shall be made based on the Standard for Polymeric Materials – Use in Electrical Equipment Evaluations, UL 746C.

12.2 For the purposes of conducting the Resistance to Impact Test in the Standard for Polymeric Materials – Use in Electrical Equipment Evaluations, UL 746C, a heater intended for indoor use that is provided with a polymeric enclosure shall be considered a floor-supported appliance even if it is specifically intended for use at elevated locations and be evaluated for use in locations where the temperature is capable of being less than normal room temperature, such as unheated warehouses or rooms.

Added 12.2 effective December 21, 2000

13 Heat Transfer Fluids

13.1 General

13.1.1 In a heater which uses a heat transfer fluid in its heating process, the fluid shall have a flash point (see 3.8) that is higher than the maximum operating temperature of the fluid measured during the Normal Temperature Test, Section 39.

UL COPYRIGHTED MATERIAL –
NOT AUTHORIZED FOR FURTHER REPRODUCTION OR
DISTRIBUTION WITHOUT PERMISSION FROM UL
Documents
Document Sharing Hub
Full document details: UL 1728 2008

14 Assembly of Components

14.1 A switch, a lampholder, a temperature control, an attachment-plug receptacle, a motor-attachment plug, or similar component shall be mounted securely and, except as noted in 14.2 and 14.3, shall be prevented from turning.

14.2 The requirement that a switch or a temperature control be prevented from turning may be waived if all five of the following conditions are met:

a) The switch or the temperature control is of a plunger or other type that does not tend to rotate when operated. A toggle switch is considered to be subject to forces that tend to turn the switch or the temperature control during operation of the switch,

b) The means for mounting the switch or the temperature control is not subject to loosening as the result of its operation,

c) The spacings are not reduced below the minimum acceptable values if the switch or the temperature control rotates,

d) The operation of the switch or the temperature control is by mechanical means rather than direct contact by persons, and

e) The shifting of the switch or the temperature control in position does not result in false indication of its setpoint with respect to the setpoint markings.

14.3 A lampholder of a type in which the lamp cannot be replaced (such as a neon pilot or indicator light in which the lamp is sealed in nonremovable jewel) need not be prevented from turning if rotation cannot reduce spacings below the minimum acceptable values.

14.4 The means for preventing the turning mentioned in 14.1 is to consist of more than friction between surfaces – for example, a toothed lock washer which provides both spring take-up and an interference lock is acceptable as means to prevent turning of a small stem-mounted switch or other device having a single-hole mounting means.

14.5 Uninsulated live parts shall be secured to the base or mounting surface that they will be prevented from turning or shifting in position if such motion may result in a reduction of spacings below the minimum acceptable values indicated in 34.1 – 34.6.

14.6 Friction between surfaces is not acceptable as a means to prevent shifting or turning of live parts, but a toothed lock washer which provides both spring take-up and an interference lock is acceptable.

15 Protection Against Corrosion

15.1 Except as noted in 15.2, iron and steel parts shall be protected against corrosion by enameling, galvanizing, plating, or other equivalent means if the deterioration of such unprotected parts would be likely to result in risk of fire, electric shock, explosion, or injury to persons.

15.2 In certain equipment where the oxidation of steel is not likely to be accelerated due to the exposure of metal to air and moisture or other oxidizing influence – thickness of metal and temperature also being factors – surfaces of sheet steel within an enclosure may not be required to be protected against corrosion. Cast-iron parts are not required to be protected against corrosion. A sheath employed on a heating element operating in air and terminal parts attached directly to the heating element need not be protected against corrosion.

UL COPYRIGHTED MATERIAL –
NOT AUTHORIZED FOR FURTHER REPRODUCTION OR
DISTRIBUTION WITHOUT PERMISSION FROM UL
Documents
Document Sharing Hub
Full document details: UL 1728 2008

15.3 The aging characteristics of plating or other finish used in a heater shall be such that deterioration of the finish will not result in unacceptable performance of the heater.

15.4 The sheath of an immersion-type heating element shall be of a metal resistant to corrosion by the liquid in which the element is intended to be immersed.

16 Supply Connections

16.1 The mass of a wall or ceiling hung heater shall not exceed 50 pounds (22.7 kg).

16.2 Hanging brackets and any necessary fasteners required for hanging the heater shall be provided as part of the product. Optional hanging kits may be available if marked in accordance with 64.10.

16.3 A wall-hung heater shall not have provisions for permanent mounting. Keyhole slots, not accessible for tightening of screws, or provisions for hanging on a bracket furnished with a heater would be acceptable for mounting such heaters.

16.4 A heater shall be provided with a length of attached flexible cord and an attachment plug for connection to the supply circuit, or shall have male pin terminals that accommodate a detachable power-supply cord. The length of the detachable power-supply cord or attached power-supply cord (including fittings) shall not be less than 6 feet (1.8 m) and not more than 8 feet (2.4 m). All detachable power-supply cords and attached power-supply cords shall comply with the requirements of the Standard for Cord Sets and Power-Supply Cords, UL 817.

Exception No. 1: The length of cord for Types SRDT and SPT-3 is specified in note b of Table 16.1.

Exception No. 2: Ceiling-hung heaters may have a cord not more than 17 feet (5.2 m) in length.

Table 16.1
Acceptable types of cord

Revised Table 16.1 effective February 11, 2011

Type of heater	Temperature of more than 121°C (250°F) on any heater surface likely to be contacted by cord[c,d]	Temperature of 121°C (250°F) or less on any heater surface likely to be contacted by cord[a,c,d]
1. Household heaters not intended for outdoor use	HPD, HPN, HSJO, HSJ	SP-2, SPT-2, SVO, SV, SVTO, SVT, SJO, SJ, SJTO, SJT, SRDT[b], SPT-3[b]
2. Commercial heaters not intended for outdoor use	HSJO, HSJ, HSO, HS	SJO, SJ, SJTO, SJT, SO, S, STO, ST, SRDT[b], SPT-3[b]

[a] Cords of the types indicated in the adjacent column may also be used.

[b] Restricted to a wall supported or a freestanding heater having a minimum cord length of 3 feet (0.9 m) and a maximum cord length of 6 feet (1.8 m).

[c] On a movable heater it is considered that any external surface that can be contacted by the cord is likely to be contacted by the cord.

[d] The maximum temperature on a heater is to be determined in accordance with the Normal Temperature Test (Section 39).

16.4.1 A power supply cord supplied as part of an appliance as described in Table 16.1, row 1 must additionally be subjected to the performance test requirements of Sections 59A – 59D.

Added 16.4.1 effective February 11, 2011

UL COPYRIGHTED MATERIAL –
NOT AUTHORIZED FOR FURTHER REPRODUCTION OR
DISTRIBUTION WITHOUT PERMISSION FROM UL

Documents
Document Sharing Hub

Full document details: UL 1728 2008

16.5 The size of the flexible cord, based on the current rating of the heater, shall be in accordance with Table 16.2.

Table 16.2
Cord wire size based on heater current rating[a]

Revised Table 16.2 effective February 11, 2011

		Maximum current rating of heater, amperes	
		Attachment plug connection and connections of supply cord to internal wiring of a heater shall be soldered, brazed, or welded[d]	
Cord wire size AWG[b]	Attachment plug connection crimped only[c]	Cord types S, SJ, SJO, SJT, SJTO, SO, SP, SPT, SRDT, ST, STO, SV, SVO, SVT, SVTO	Cord types HPD, HPN, HS, HSJ, HSJO, HSO
18	8	10	10
16	10.4	13	15
14	14.4	18	20

[a] This table limits the heater current on the basis of cord wire size, type of cord, type of connection between the cord wires and blades of the attachment plug and connections of power supply cord to internal wiring of a heater. For current limitation based on the attachment plug rating, see 16.6.

[b] The maximum current rating for other cord sizes can be determined from Table 400-5(A), Ampacity of Flexible Cords and Cables, National Electrical Code, ANSI/NFPA 70. When the attachment plug is connected by crimping only, the current rating of the heater is not to exceed 80 percent of the rating of the corresponding wire sizes of Type S Cord, regardless of the type of cord used.

[c] Applies to any acceptable cord type.

[d] A soldered connection shall be mechanically secured before being soldered. A soldered connection that is crimped before being soldered is considered to be mechanically secured before soldering. A brazed or welded connection may additionally be mechanically secured before brazing or welding.

16.6 The current rating of the attachment plug shall not be less than 125 percent of the current rating of the heater except that a 15-ampere attachment plug is acceptable for a heater rated at not more than 1500 watts at 120 volts, or 3000 watts at 240 volts, and a 20-ampere attachment plug is acceptable for a heater rated at not more than 2000 watts at 120 volts or 4000 watts at 240 volts.

16.7 The flexible cord shall be as indicated in Table 16.1 or shall be of type having such properties that it will be at least equally serviceable for the particular application.

16.8 The flexible cord provided with a heater intended for outdoor use shall be marked with the suffix letter ″W ″.

16.9 The attachment plug (of a permanently attached cord or of a cord set) shall be acceptable for its intended use. Some of the more common plug configurations are shown in Figure 16.1.

16.10 Supplementary insulation on a flexible cord shall not extend more than 1/2 inch (12.7 mm) outside the heater (unless provided with additional mechanical protection), shall be prevented from fraying or unraveling, and shall not affect adversely the means for providing strain relief.

16.11 Strain relief shall be provided to prevent a mechanical stress on a flexible supply cord from being transmitted to terminals, splices, or interior wiring.

UL COPYRIGHTED MATERIAL –
NOT AUTHORIZED FOR FURTHER REPRODUCTION OR
DISTRIBUTION WITHOUT PERMISSION FROM UL
Documents
Document Sharing Hub
Full document details: UL 1728 2008

Figure 16.1
Attachment plug configurations

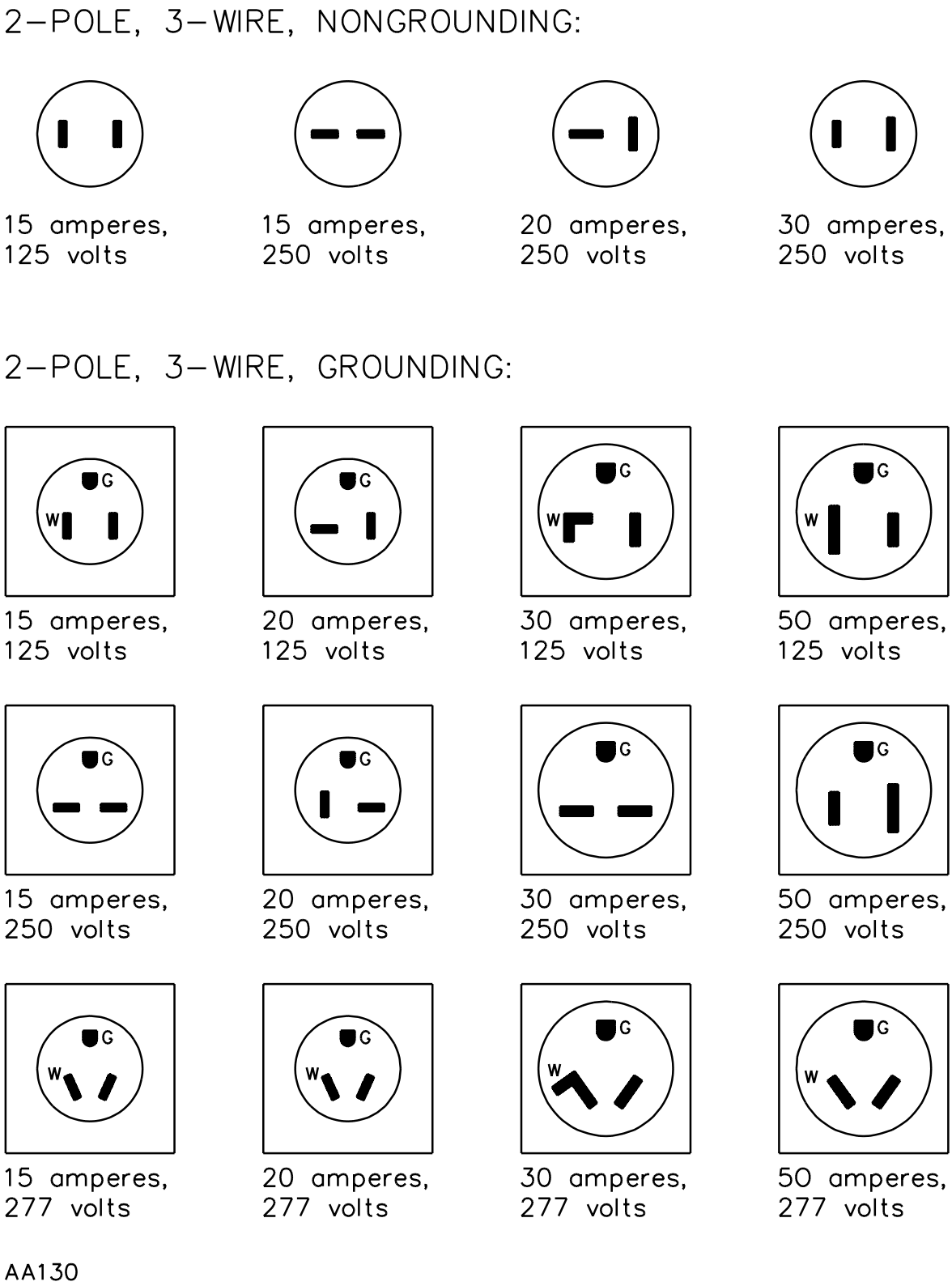

UL COPYRIGHTED MATERIAL –
NOT AUTHORIZED FOR FURTHER REPRODUCTION OR
DISTRIBUTION WITHOUT PERMISSION FROM UL
Documents
Document Sharing Hub
Full document details: UL 1728 2008

16.12 Means shall be provided to prevent the flexible cord from being pushed into the enclosure of a heater through the cord-entry hole if such displacement is likely to subject the cord to mechanical damage or to expose the cord to a temperature higher than that for which it is acceptable, or if it is likely to reduce spacings (such as to a metal strain-relief clamp) below the minimum acceptable values.

16.13 If a knot serves as strain relief in an attached flexible cord, any surface with which the knot may come in contact shall be free from projections, sharp edges, burrs, fins, and the like, which may cause abrasion of the insulators on the conductors.

UL COPYRIGHTED MATERIAL –
NOT AUTHORIZED FOR FURTHER REPRODUCTION OR
DISTRIBUTION WITHOUT PERMISSION FROM UL
Documents
Document Sharing Hub
Full document details: UL 1728 2008

No Text on This Page

UL COPYRIGHTED MATERIAL –
NOT AUTHORIZED FOR FURTHER REPRODUCTION OR
DISTRIBUTION WITHOUT PERMISSION FROM UL

Documents
Document Sharing Hub

Full document details: UL 1728 2008

16.14 If a heater is provided with pin terminals, the heater shall be constructed so that no live parts will be exposed to unintentional contact when the intended plug is in place on the pins.

16.15 A pin guard is required, such that:

a) A straight edge placed in any position, across and in contact with edges of the plug opening without the plug in place, cannot be made to contact any current-carrying pin.

b) With the plug aligned with the pins and the face of the plug in a plane located perpendicular to the end or ends of the farthest projecting current-carrying pin, the probe shown in Figure 8.3 shall not touch any current-carrying pin while the probe is inserted through any opening with the heater in any position.

16.16 A pin terminal shall be securely and rigidly mounted and shall be prevented from shifting in position by means other than friction between surfaces.

16.17 The requirement in 16.16 is intended primarily to provide for the maintenance of spacings in accordance with 34.1 – 34.6 and Table 34.1, and for spacings between pin-type terminals as indicated in Table 16.3. Under this requirement, consideration is also to be given to the means for locking terminals in position to maintain tightness.

Table 16.3
Pins

Type and rating of plug which accommodates the pins	Configuration of pins				Diameter of pins		Length of pins	
	Number	Arrange-ments	Spacings between centers					
			Inches	mm	Inches	mm	Inches	mm
Appliance plug rated for 5 amperes at 250 volts and for 10 amperes at 125 volts	2	in line	1/2	12.7	5/32 ±0.005	3.97 ±0.13	9/16 – 5/8	14.3 – 15.9
Flatiron plug rated for 5 amperes at 250 volts and for 10 amperes at 125 volts	2	in line	11/16	17.5	3/16 ±0.005	4.76 ±0.13	3/4 – 7/8	19.1 – 22.2
Jumbo appliance plug rated for 10 amperes at 250 volts and for 15 amperes at 125 volts	2	in line	1-1/16	27.0	3/16 ±0.005	4.76 ±0.13	3/4 – 7/8	19.1 – 22.2
Reversible plug (for two-heat control) rated for 10 amperes at 250 volts and for 15 amperes at 125 volts[a]	3	in line	7/8	22.2	3/16 ±0.005	4.76 ±0.13	3/4 – 7/8	19.1 – 22.2
Reversible plug (for two- or three-heat control) rated for 10 amperes at 250 volts and for 15 amperes at 125 volts[a]	3	One pin at each apex of an equilateral triangle	7/8	22.2	3/16 ±0.005	4.76 ±0.13	3/4 – 7/8	19.1 – 22.2

[a] Usually this plug is made without a contact in one of the holes.

UL COPYRIGHTED MATERIAL –
NOT AUTHORIZED FOR FURTHER REPRODUCTION OR
DISTRIBUTION WITHOUT PERMISSION FROM UL
Documents
Document Sharing Hub
Full document details: UL 1728 2008

16.18 If a heater employs three or more pin terminals intended for use with a plug that covers all the pins, the terminals shall be so spaced that they will not accommodate a flatiron or appliance plug or a cord connector; and the plug that these pins will accommodate shall be acceptable for the particular application.

16.19 The dimensions of pins and their center-to-center spacings (including the corresponding spacings of the female contacts of general-use plugs which will accommodate these arrangement of pins) are as indicated in Table 16.3.

16.20 At point where a flexible cord passes through an opening in a wall, barrier, or enclosing case, there shall be a bushing or the equivalent that shall be secured in place, and shall have a smooth, rounded surface against which the cord may bear. If Type SP-2, SPT-2, or other cord lighter than Type HSJ is employed, if the wall or barrier is of metal, and if the construction is such that the cord may be subjected to strain or motion, an insulating bushing shall be provided. The heat and moisture-resistant properties of the bushing material shall be acceptable for the particular application.

16.21 If the cord hole is in wood, porcelain, phenolic composition, or other nonconducting material, a smooth, rounded surface is considered to be equivalent to a bushing.

16.22 Ceramic materials and some molded compositions are acceptable generally for insulating bushings; but a separate bushing of wood, hot-molded shellac-and-tar composition, or rubber material (other than in a motor) is not acceptable. Vulcanized fiber may be employed if the bushing is not less than 3/64 inch (1.2 mm) thick and if it is so formed and secured in place that it will not be affected adversely by conditions of ordinary moisture.

16A Special Protection Devices

Added Section 16A effective February 11, 2011

16A.1 An AFCI or LCDI provided as part of a cord-connected appliance shall comply with the Standard for Arc Fault Circuit Interrupters, UL 1699.

16A.2 The AFCI or LCDI shall be installed as an integral part of the attachment plug or located in the supply cord within 4 in of the attachment plug.

16A.3 Arc fault detection testing shall include the following, as applicable:

a) Carbonized path arc clearing time test;

b) Point contact arc test;

c) Unwanted tripping test – Load Condition I;

d) Unwanted tripping test – Load Condition II – Condition B and C;

e) Unwanted tripping test – Load Condition III – Condition A;

f) Operation Inhibition - Masking.

Exception: The test carbonized path arc clearing time test is not applicable for LCDIs that are provided with shielded power-supply cords.

UL COPYRIGHTED MATERIAL –
NOT AUTHORIZED FOR FURTHER REPRODUCTION OR
DISTRIBUTION WITHOUT PERMISSION FROM UL
Documents
Document Sharing Hub
Full document details: UL 1728 2008

16A.4 An AFCI or LCDI provided as part of an appliance intended for outdoor use shall comply with the applicable requirements in Section 49.1.

17 Current-Carrying Parts

17.1 Plated ferrous materials may be used for current-carrying parts whose temperature during normal operation is more than 100°C (212°F), but plain (unplated) iron or steel shall not be used regardless of temperatures. A copper conductor, unless tinned, nickel-coated, silver-plated, or otherwise protected, shall not be subjected to a temperature rise of more than 125°C (225°F) at a pressure terminal connector or to a temperature rise of more than 175°C (315°F) elsewhere. Stainless steel and other corrosion-resistant alloys may be used for current-carrying parts regardless of temperature.

17.2 Ordinary ferrous materials, if provided with a corrosion-resistant coating, may be used for a current-carrying part as follows:

a) Within a motor or associated governor, and

b) On control-devices (such as combination tip-over and temperature controls) if the part has been evaluated as acceptable for use in an ambient temperature in excess of 100°C (212°F).

18 Internal Wiring

18.1 General

18.1.1 The internal wiring of a heater shall consist of wires of a size and type or types that are acceptable for the particular application, when considered with respect to:

a) The temperature and voltage to which the wiring is likely to be subjected,

b) Its exposure to oil or grease, and

UL COPYRIGHTED MATERIAL –
NOT AUTHORIZED FOR FURTHER REPRODUCTION OR
DISTRIBUTION WITHOUT PERMISSION FROM UL
Documents
Document Sharing Hub
Full document details: UL 1728 2008

No Text on This Page

UL COPYRIGHTED MATERIAL –
NOT AUTHORIZED FOR FURTHER REPRODUCTION OR
DISTRIBUTION WITHOUT PERMISSION FROM UL

Documents
Document Sharing Hub

Full document details: UL 1728 2008

c) Other conditions of service to which it is likely to be subjected.

18.1.2 For the purpose of these requirements, the internal wiring of an appliance is considered to be all the interconnecting wiring beyond the point where the power-supply cord enters the enclosure.

18.1.3 There is no temperature limit applicable to a conductor (except as noted in 17.1) provided with beads of noncarbonizable material or the equivalent.

18.2 Protection of wiring

18.2.1 The wiring and connections between parts of a heater shall be protected or enclosed, except that a length of flexible cord may be employed for external connections, or for internal connections that may be exposed during servicing, if flexibility of the wiring is essential.

18.2.2 The internal wiring of a heater in the vicinity of a lampholder that accepts either an infrared lamp or an ordinary lamp:

a) Shall be a jacketed type at least equivalent to Type SP-2 flexible cord. Asbestos-insulated wiring and appliance wiring material is not acceptable unless provided with sleeving or tubing.

b) Shall be routed along the metal surface of the heater enclosure and shall be so secured as to minimize the likelihood of its being hooked or grasped.

18.2.3 A conductor utilizing beads for insulation shall not be used outside an enclosure.

18.2.4 Internal wiring that is exposed through an opening in the enclosure of a heater is considered to be protected as required in 18.2.1 – 18.2.3 if, when judged as though it were film-coated wire, the wiring would be acceptable according to 8.2 – 8.4. Internal wiring within an enclosure is acceptable if, even though it can be touched with the probe, it is so protected or guarded that it cannot be grasped or hooked in such a manner that it could be subjected to stress.

18.2.5 If the wiring of a heater is located where it may be in proximity to combustible material or may be subjected to physical damage, it shall be in armored cable, rigid metal conduit, electrical metallic tubing, metal raceway, or shall otherwise be protected.

18.2.6 Wiring shall be protected from sharp edges (including male screw threads), burrs, fins, moving parts, and other agencies that might abrade the insulation on conductors.

18.2.7 A hole by means of which insulated wires pass through a sheet-metal wall within the overall enclosure of a heater shall be provided with a smooth, rounded bushing or shall have smooth, rounded surfaces upon which the wires may bear, to prevent abrasion of the insulation. A flexible cord used for external interconnection as mentioned in 18.2.1 shall be provided with strain relief and bushings in accordance with 16.11 – 16.13 and 16.20 – 16.22 unless the construction is such that the cord will be protected from stress or motion.

18.2.8 Insulated wires may be bunched and passed through a single opening in a metal wall within the enclosure of heater.

UL COPYRIGHTED MATERIAL –
NOT AUTHORIZED FOR FURTHER REPRODUCTION OR
DISTRIBUTION WITHOUT PERMISSION FROM UL
Documents
Document Sharing Hub
Full document details: UL 1728 2008

18.3 Wire connectors

18.3.1 All electrical connections, such as wire nuts, splicing wire connectors, quick-connect terminals, terminal connectors, multi-pin and other forms of wire connectors, shall comply with the following standards:

a) The Standard for Electrical Quick-Connect Terminals, UL 310;

b) The Standard for Wire Connectors and Soldering Lugs for Use with Copper Conductors, UL 486A;

c) The Standard for Splicing Wire Connectors, UL 486C;

d) The Standard for Equipment Wiring Terminals for Use with Aluminum and/or Copper Conductors, UL 486E; or

e) The Standard for Component Connectors for Use in Data, Signal, Control and Power Applications, UL 1977.

Exception No. 1: This requirement is not applicable to current-carrying connections that are located in a low-voltage circuit (see 3.12).

Exception No. 2: This requirement is not applicable to the following types of connections:

a) Brazed or welded connections;

b) Soldered connections on printed circuit boards located in a low-voltage circuit (see 3.12); or

c) Connections on small components that are mounted on printed circuit boards located in a low-voltage circuit (see 3.12).

Revised 18.3.1 effective February 11, 2011

18.3.2 A splice shall be provided with insulation equivalent to that of the wires involved if permanence of spacing between the splice and other metal parts is not provided.

18.3.3 Insulation consisting of two layers of friction tape, of two layers of thermoplastic tape, or of one layer of friction tape wrapped over one layer of rubber tape is acceptable on a splice. In determining if splice insulation consisting of coated-fabric, thermoplastic, or other type of tubing is acceptable, consideration is to be given to such factors as its dielectric properties, heat-resistant and moisture-resistant characteristics, and the like. Thermoplastic tape wrapped over a sharp edge is not acceptable.

18.3.4 The means of connecting stranded internal wiring to a wire-binding screw shall be such that loose strands of wire will be prevented from contacting other live parts not always of the same polarity as the wire and from contacting noncurrent-carrying conductive parts. This may be accomplished by use of pressure terminal connectors, soldering lugs, crimped eyelets, soldering all strands of the wire, or other equivalent means.

UL COPYRIGHTED MATERIAL –
NOT AUTHORIZED FOR FURTHER REPRODUCTION OR
DISTRIBUTION WITHOUT PERMISSION FROM UL
Documents
Document Sharing Hub
Full document details: UL 1728 2008