UL 1740

STANDARD FOR SAFETY

Robots and Robotic Equipment

This document is only permissible for use by MOHD AKHTAR of AECOM Technical Services Inc.. 8/15/2023 2:28:53 PM

Documents
Document Sharing Hub

Full document details: UL 1740 2023

This document is only permissible for use by MOHD AKHTAR of AECOM Technical Services Inc.. 8/15/2023 2:28:53 PM

Documents
Document Sharing Hub

ULSE INC. COPYRIGHTED MATERIAL – NOT AUTHORIZED FOR FURTHER REPRODUCTION OR DISTRIBUTION WITHOUT PERMISSION FROM ULSE INC.

UL Standard for Safety for Robots and Robotic Equipment, UL 1740

Fourth Edition, Dated January 26, 2018

Summay of Topics

This revision of ANSI/UL 1740 dated August 11, 2023 is being issued to incorporate the following requirements:

– General requirements for integration of robots: 32.3;

– Requirements for end-effectors: Section 35A;

– Batteries and Battery Circuits: 41.1.1, 41.2, 41.3, 41.3A, 41.3B, 41.4, 41.6, and Section 51.

– Clarification of water exposure requirements: 48.1, 48.2, and 49.1

Text that has been changed in any manner or impacted by ULSE's electronic publishing system is marked with a vertical line in the margin.

The new and revised requirements are substantially in accordance with Proposal(s) on this subject dated June 9, 2023.

All rights reserved. No part of this publication may be reproduced, stored in a retrieval system, or transmitted in any form by any means, electronic, mechanical photocopying, recording, or otherwise without prior permission of ULSE Inc. (ULSE).

ULSE provides this Standard "as is" without warranty of any kind, either expressed or implied, including but not limited to, the implied warranties of merchantability or fitness for any purpose.

In no event will ULSE be liable for any special, incidental, consequential, indirect or similar damages, including loss of profits, lost savings, loss of data, or any other damages arising out of the use of or the inability to use this Standard, even if ULSE or an authorized ULSE representative has been advised of the possibility of such damage. In no event shall ULSE's liability for any damage ever exceed the price paid for this Standard, regardless of the form of the claim.

Users of the electronic versions of UL's Standards for Safety agree to defend, indemnify, and hold ULSE harmless from and against any loss, expense, liability, damage, claim, or judgment (including reasonable attorney's fees) resulting from any error or deviation introduced while purchaser is storing an electronic Standard on the purchaser's computer system.

This document is only permissible for use by MOHD AKHTAR of AECOM Technical Services Inc.. 8/15/2023 2:28:53 PM

Documents
Document Sharing Hub

ULSE INC. COPYRIGHTED MATERIAL – NOT AUTHORIZED FOR FURTHER REPRODUCTION OR DISTRIBUTION WITHOUT PERMISSION FROM ULSE INC.

Full document details: UL 1740 2023

No Text on This Page

This document is only permissible for use by MOHD AKHTAR of AECOM Technical Services Inc.. 8/15/2023 2:28:53 PM

Documents
Document Sharing Hub
ULSE INC. COPYRIGHTED MATERIAL – NOT AUTHORIZED FOR FURTHER REPRODUCTION OR DISTRIBUTION WITHOUT PERMISSION FROM ULSE INC.
Full document details: UL 1740 2023

JANUARY 26, 2018
(Title Page Reprinted: August 11, 2023)

ANSI/UL 1740-2023

UL 1740

Standard for Robots and Robotic Equipment

First Edition – February, 1995
Second Edition – November, 1998
Third Edition – December, 2007

Fourth Edition

January 26, 2018

This ANSI/UL Standard for Safety consists of the Fourth Edition including revisions through August 11, 2023.

The most recent designation of ANSI/UL 1740 as an American National Standard (ANSI) occurred on August 11, 2023. ANSI approval for a standard does not include the Cover Page, Transmittal Pages, and Title Page.

Comments or proposals for revisions on any part of the Standard may be submitted to ULSE at any time. Proposals should be submitted via a Proposal Request in the Collaborative Standards Development System (CSDS) at https://csds.ul.com.

Our Standards for Safety are copyrighted by ULSE Inc. Neither a printed nor electronic copy of a Standard should be altered in any way. All of our Standards and all copyrights, ownerships, and rights regarding those Standards shall remain the sole and exclusive property of ULSE Inc.

COPYRIGHT © 2023 ULSE INC.

This document is only permissible for use by MOHD AKHTAR of AECOM Technical Services Inc.. 8/15/2023 2:28:53 PM

ULSE INC. COPYRIGHTED MATERIAL – NOT AUTHORIZED FOR FURTHER REPRODUCTION OR DISTRIBUTION WITHOUT PERMISSION FROM ULSE INC.

Documents
Document Sharing Hub

Full document details: UL 1740 2023

No Text on This Page

This document is only permissible for use by MOHD AKHTAR of AECOM Technical Services Inc.. 8/15/2023 2:28:53 PM

Documents
Document Sharing Hub
ULSE INC. COPYRIGHTED MATERIAL – NOT AUTHORIZED FOR FURTHER REPRODUCTION OR DISTRIBUTION WITHOUT PERMISSION FROM ULSE INC.
Full document details: UL 1740 2023

CONTENTS

INTRODUCTION

1 Scope 7
2 Glossary 7
3 Components 15
4 Units of Measurement 16
5 Undated References 16

CONSTRUCTION

6 General 16
7 Frame and Enclosure 16
7.1 General 16
7.2 Cast metal 16
7.3 Sheet metal 17
7.4 Doors and covers 19
7.5 Nonmetallic – General 23
7.6 Bonding 24
7.7 Parts of enclosures 24
7.8 Windows 24
7.9 Openings in enclosures – Ventilating openings 25
8 Mounting 26
9 Clearance 27
10 Operating Mechanism 27
11 Accessibility of Uninsulated Live Parts, Film-Coated Wire, and Moving Parts 27
12 Protection Against Corrosion 32
13 Polymeric Materials 33
13.1 General 33
13.2 Small parts 33
13.3 Insulating material 34
14 Field Connections 34
14.1 General 34
14.2 Terminals 36
15 Cord Connected Robotic Equipment 37
16 Strain Relief 37
17 Bushings 37
18 Current-Carrying Parts 37
19 Conductors 38
19.1 General 38
19.2 Interconnecting cords and cables 41
19.3 Interconnection of units 41
20 Grounding 42
20.1 General 42
20.2 Grounding means 42
20.3 Terminals and leads 42
21 Bonding of Internal Parts 43
21.1 General 43
21.2 Construction and connection 45
22 Motors 46
23 Printed-Wiring Boards 47
24 Transformers 47
25 Capacitors, Capristors and Varistors 47
25.1 Isolating components 47

This document is only permissible for use by MOHD AKHTAR of AECOM Technical Services Inc.. 8/15/2023 2:28:53 PM

ULSE INC. COPYRIGHTED MATERIAL – NOT AUTHORIZED FOR FURTHER REPRODUCTION OR DISTRIBUTION WITHOUT PERMISSION FROM ULSE INC.

Documents Document Sharing Hub

Full document details: UL 1740 2023

25.2 Across-the-line components 47
25.3 General....48
26 Supply-Circuit Disconnecting Means....48
26.1 General....48
26.2 Position indication....48
26.3 Supply conductors to be disconnected 48
26.4 Connections to supply lines 48
26.5 Exposed live parts 49
26.6 Mounting....49
26.7 Electrical cabinet interlocks (Not intended for Functional Safety of a Workcell) 49
26.8 Operating handle 49
26.9 Attachment plug and receptacle....49
27 Overcurrent Protection, Control-Circuit Conductors....50
28 Spacings 51
28.1 General....51
28.2 Clearance and creepage distances 51
29 Field Wiring Space 53
30 Separation of Circuits 54
31 Use with lasers or X-Radiation....55

PROTECTION AGAINST INJURY TO PERSONS

32 General 55
33 Sharp Corners and Edges....55
34 Moving Parts – Other Than the Robot 56
35 Moving Parts – Drive Power Indicator 56
35.1 General....56
35.2 Limiting robot motion....56
35.3 Robot control system 57
35.4 Emergency movement without drive power and brake release 57
35A End Effectors....57
36 Temperature 58
37 Mounting Devices....58
38 Parts Subject to Pressure....58
39 Pressure-Relief Devices 58
40 Protection of Users and Service Personnel....59
40.1 General....59
40.2 Robot control....60
40.3 Actuating controls 61
40.4 Robot manual mode....61
40.5 Pendant 62
40.6 Robot system workcell protection....62
40.7 Safeguarding requirements for maintenance – General 63
40.8 Electrical servicing 63
41 Batteries and Battery Circuits 63
41.1 General....63
41.2 Battery terminals 64
41.3 Lithium batteries (rechargeable/secondary) 64
41.3A Lithium Non-Rechargeable Batteries (primary) 64
41.3B Lead acid batteries 64
41.4 Non-lithium battery circuits 65
41.5 Fuel cells 65
41.6 Electrochemical capacitors....65
42 Accessories and Attachments 65

This document is only permissible for use by MOHD AKHTAR of AECOM Technical Services Inc.. 8/15/2023 2:28:53 PM

Documents
Document Sharing Hub

ULSE INC. COPYRIGHTED MATERIAL – NOT AUTHORIZED FOR FURTHER REPRODUCTION OR DISTRIBUTION WITHOUT PERMISSION FROM ULSE INC.

Full document details: UL 1740 2023

PERFORMANCE

43 General 65
44 Power Input and Maximum Ampacity Test 65
44.1 Power input 65
44.2 Maximum ampacity 65
45 Temperature Test 66
46 Overvoltage and Undervoltage Tests 70
47 Leakage Current Test 71
48 Robots Intended for Use in Water Environments 73
49 Outdoor-Use Tests 73
50 Maximum Low Voltage Measurement 74
51 Energy Source Low Voltage – Program Memory Loss 74
51.1 Battery or super-capacitor (Ultra-cap) overcharge 74
51.2 Battery or super-capacitor discharge 74
51.3 Battery / battery pack drop 74
51.4 Energy storage test results 74
51.5 Energy Source low voltage – program memory loss 74
52 Pendant Tests: Drop, Handle and Mounting Means 75
52.1 General 75
52.2 Pendant: Handle and mounting means 75
52.3 Pendant: Enabling device 75
53 Interconnecting Cords and Cables Test 75
54 Abnormal Operation Test 76
54.1 General 76
54.2 Loss of primary power single phase test 76
54.3 Locked ventilation motor test 76
54.4 Blocked mechanical filter test 76
54.5 Locked drive motor test 77
54.6 Locked brake test 77
55 Component Breakdown Test 77
56 Overload Test 77
57 Endurance Test 78
58 End of Travel Hardstop Test 78
59 Power Loss and Power Restoration Test 78
60 Emergency Stop Operation Test and Maximum Stopping Time and Distance or Angle Verification 78
61 Enabling Device Verification 78
62 Emergency Movement of Robot Without Drive Power Test (See 35.4) 79
63 Gripper (End-Effector) Test 79
64 Manual Mode Reduced Speed Measurement 79
65 Voltage Surge Test 79
66 Dielectric Voltage-Withstand Test 80
66.1 General 80
66.2 Power transformer dielectric withstand 81
67 Burnout Test (Transformer Overload) 82
68 Ground Resistance Test 82
69 Strain Relief Test 83
70 Flexing Test 83
71 Physical Stability Test 83
72 Lifting/Transportation Means Loading Test 83
73 Mounting Devices Test 84
74 Parts Subject to Pressure Tests 84
75 Pressure-Relief Devices Test 85
76 Enclosure Test 85
77 Horizontal Surface Loading Test 86

This document is only permissible for use by MOHD AKHTAR of AECOM Technical Services Inc.. 8/15/2023 2:28:53 PM

Documents
Document Sharing Hub

ULSE INC. COPYRIGHTED MATERIAL – NOT AUTHORIZED FOR FURTHER REPRODUCTION OR DISTRIBUTION WITHOUT PERMISSION FROM ULSE INC.

Full document details: UL 1740 2023

78 Gasket Tests 86
79 Glass Window Impact Test 86
80 Securement of Snap-On Cover Test 86
81 Wheel or Caster Securement 87
82 Electromagnetic Compatibility (EMC) 87
83 Functional Safety Analysis 87
83.1 General 87
83.2 Analysis program 87
83.3 Provisions for redundancy 88
83.4 Use of diversity 88

MANUFACTURING AND PRODUCTION TESTS

84 Production-Line Dielectric Voltage-Withstand Test – General 88
85 Production-Line Grounding-Continuity Test 90
86 Production-Line Polarization-Continuity Test 90

RATING

87 Details 90

MARKING

88 General 90
89 Wiring 92
90 Elevated Ambient Temperature 94
91 Cautionary Markings 95

MANUFACTURER SUPPLIED DOCUMENTATION

92 Manufacturer's Documentation 97

Appendix A Standards for Components

This document is only permissible for use by MOHD AKHTAR of AECOM Technical Services Inc.. 8/15/2023 2:28:53 PM

Documents
Document Sharing Hub

ULSE INC. COPYRIGHTED MATERIAL – NOT AUTHORIZED FOR FURTHER REPRODUCTION OR DISTRIBUTION WITHOUT PERMISSION FROM ULSE INC.

Full document details: UL 1740 2023

INTRODUCTION

1 Scope

1.1 These requirements cover robots and robotic equipment rated 600 V or less and intended for installation in accordance with the National Electrical Code, NFPA 70. Equipment evaluated to these requirements is intended to meet the requirements of Robots and Robotic Devices – Safety Requirements for Industrial Robots – Part 1, ISO 10218-1, and can be installed in accordance with ISO 10218-1, Robots and Robotic Devices – Safety Requirements for Industrial Robots – Part 1 and ISO 10218-2, Robots and Robotic Devices – Safety Requirements for Industrial Robots – Part 2: Robot Systems and Integration.

1.2 These requirements cover robotic equipment and systems intended for indoor and outdoor use in applications such as parts assembly, parts transfer, automated material handling, inspection, loading, die-casting, deburring, welding, paint spraying, automated storage/retrieval systems, and the like.

1.3 Robots and robotic equipment that contain unique features or functions associated with the application or end-product equipment, and not specifically addressed in this standard or referenced standards, shall also be evaluated to the applicable requirements of standards for the application or end-product equipment.

1.4 In addition to the requirements in this standard, robots and robotic systems shall also comply with the applicable sections of the Electrical Standard for Industrial Machinery, NFPA 79.

1.5 Robots and robotic systems intended for use in hazardous locations, as defined by the National Electrical Code, NFPA 70, shall also comply with the applicable safety requirements based on the specific end-use application, including those contained in the following standards:

a) Intrinsically Safe Apparatus and Associated Apparatus for Use in Class I, II, and III, Division 1, Hazardous (Classified) Locations, UL 913;

b) Explosion-Proof and Dust-Ignition-Proof Electrical Equipment for Use in Hazardous (Classified) Locations, UL 1203;

c) Nonincendive Electrical Equipment for Use in Class I and II, Division 2 and Class III, Divisions 1 and 2 Hazardous (Classified) Locations, ISA 12.12.01;

d) Electric Motors and Generators for Use in Hazardous (Classified) Locations, UL 674; and

e) Purged and Pressurized Enclosures for Electrical Equipment, NFPA 496.

1.6 In the following text, a requirement that applies to one type of equipment, such as a controller or pendant, will be identified by a specific reference. In the absence of a specific reference or if the term robot or robotic equipment is employed, it is to be understood that the requirement applies to all types of equipment covered by this standard.

2 Glossary

2.1 For the purpose of this standard the following definitions apply.

2.2 AUTOMATIC OPERATION – The time when a robot is performing its programmed tasks through continuous program execution.

2.3 AWARENESS SIGNAL – A device that warns a person of an approaching or present hazard by an audible or visible means. A visible means could include a text message or display on a pendant or user interface screen.

This document is only permissible for use by MOHD AKHTAR of AECOM Technical Services Inc.. 8/15/2023 2:28:53 PM

Documents
Document Sharing Hub

ULSE INC. COPYRIGHTED MATERIAL – NOT AUTHORIZED FOR FURTHER REPRODUCTION OR DISTRIBUTION WITHOUT PERMISSION FROM ULSE INC.

Full document details: UL 1740 2023

2.4 CATEGORY – Classification of the Safety-Related Parts of a Control System (SRP/CS) in respect of their resistance to faults and their subsequent behavior in the fault condition, and which is achieved by the structural arrangement of the parts, fault detection and/or by their reliability.

©ISO. This material is reproduced from ISO 13849-1:2015 with permission of the American National Standards Institute (ANSI) on behalf of the International Standardization Organization. All rights reserved.

2.5 CLASS 2– A circuit, transformer, or power source having energy- and voltage-limiting characteristics as described in Standard for Low Voltage Transformers – Part 3: Class 2 and Class 3 Transformers, UL 5085-3.

2.6 COLLABORATIVE OPERATION – State in which a purposely designed robot system and an operator work within a collaborative workspace.

©ISO. This material is reproduced from ISO/TS 15066 with permission of the American National Standards Institute (ANSI) on behalf of the International Organization for Standardization. All rights reserved. ISO/TS 15066 was an ISO draft document that was subject to change without notice. It cannot be referred to as an approved ISO standard.

2.7 COLLABORATIVE WORKSPACE – Space within the operating space where the robot system (including the workpiece) and a human can perform tasks concurrently during production operation.

©ISO. This material is reproduced from ISO/TS 15066 with permission of the American National Standards Institute (ANSI) on behalf of the International Organization for Standardization. All rights reserved. ISO/TS 15066 was an ISO draft document that was subject to change without notice. It cannot be referred to as an approved ISO standard.

2.8 DRIVE POWER – The source or means of supplying energy to the robot actuators to produce motion.

2.9 ELECTRICAL/ ELECTRONIC/ PROGRAAMMABLE ELECTRONIC E/E/PE – Based on Electrical (E) and/or Electronic (E) and/or Programmable Electronic (PE) technology.

NOTE – The term is intended to cover any and all devices or systems operating on electrical principles.

EXAMPLE: Electrical/electronic/programmable electronic devices include:

– Electro-mechanical devices (electrical);

– Solid-state non-programmable electronic devices (electronic);

– Electronic devices based on computer technology (programmable electronic).

©IEC. This material is reproduced from IEC 61508-4 Ed. 2.0 b:2010, with permission of the American National Standards Institute (ANSI) on behalf of International Electrotechnical Commission. All rights reserved.

2.10 EMERGENCY STOP (FUNCTION) – Function which is intended to:

a) Avert arising or reduce existing hazards to persons, damage to machinery or to work in progress; and

b) Be initiated by a single human action.

©ISO. This material is reproduced from ISO 12100:2010 with permission of the American National Standards Institute (ANSI) on behalf of the International Standardization Organization. All rights reserved.

2.11 ENABLING DEVICE – A manually operated device which, when continuously activated, permits motion.

This document is only permissible for use by MOHD AKHTAR of AECOM Technical Services Inc.. 8/15/2023 2:28:53 PM

Documents
Document Sharing Hub

ULSE INC. COPYRIGHTED MATERIAL – NOT AUTHORIZED FOR FURTHER REPRODUCTION OR DISTRIBUTION WITHOUT PERMISSION FROM ULSE INC.

Full document details: UL 1740 2023

2.12 END-EFFECTOR – An accessory device or tool specifically designed for attachment to the robot wrist or tool mounting plate to enable the robot to perform its intended task. (Examples may include gripper, spot weld gun, arc weld gun, spray paint gun, or any other application tools.)

2.13 FIELD-WIRING TERMINAL – A wiring terminal on permanently connected equipment to which connections are made when the equipment is installed in the field.

2.14 FUNCTIONAL SAFETY (FS) – Part of the overall safety relating to the Equipment Under Control (EUC) and the EUC control system that depends on the correct functioning of the E/E/PE safety-related systems and other risk reduction measures.

©IEC. This material is reproduced from IEC 61508-4 Ed. 2.0 b:2010, with permission of the American Standards Institute (ANSI) on behalf of International Electrotechnical Commission. All rights reserved.

2.15 INTERLOCK – An arrangement which allows the operation of one control or mechanism, or prevents the operation of another.

2.16 ISOLATED LIMITED-ENERGY SECONDARY CIRCUIT – A circuit derived from an isolated secondary winding of a transformer having a maximum capacity of 100 Volt-Amperes and an open-circuit secondary-voltage rating not exceeding 1000 V.

2.17 ISOLATED LOW-VOLTAGE LIMITED-ENERGY – A circuit involving a potential of not more than 42.4 V (60 V dc) peak supplied by one of the following:

a) An energy-limiting Class 2 transformer;

b) A nonenergy-limiting Class 2 transformer and an overcurrent protective device. The protective device is:

1) Not to be of the automatic reclosing type;

2) To be trip-free from the reclosing mechanism; and

3) Not to be readily interchangeable with a device of a different rating.

c) A combination of an isolated transformer secondary winding and a fixed impedance that complies with all the performance requirements for an energy-limiting Class 2 transformer or a non-isolated low-voltage limited-energy power source;

d) A dry-cell battery having output characteristics not greater than those of an energy-limiting Class 2 transformer or a non-isolated low-voltage limited-energy power source; or

e) A combination of a rechargeable battery and a fixed impedance that complies with all of the performance requirements for an energy-limiting Class 2 transformer or a non-isolated low-voltage limited-energy power source.

2.18 MANUAL MODE – Control state that allows for the direct control by an operator.

©ISO. This material is reproduced from ISO 10218-1:2011 with permission of the American National Standards Institute (ANSI) on behalf of the International Standardization Organization. All rights reserved.

2.19 NON-ISOLATED LOW-VOLTAGE LIMITED-ENERGY POWER SOURCE – A circuit derived from a source of supply classified as line voltage by connecting impedance in series with the supply circuit as a means of limiting the voltage and power to comply with Class 2 characteristics.

This document is only permissible for use by MOHD AKHTAR of AECOM Technical Services Inc.. 8/15/2023 2:28:53 PM

Documents
Document Sharing Hub

ULSE INC. COPYRIGHTED MATERIAL – NOT AUTHORIZED FOR FURTHER REPRODUCTION OR DISTRIBUTION WITHOUT PERMISSION FROM ULSE INC.

Full document details: UL 1740 2023

2.20 OPEN TYPE (PRODUCT) – (Product) Intended for incorporation within enclosure or assembly which will provide access protection.

2.21 OPERATOR – The person designated to start, monitor and stop the intended productive operation of a robot or robot system. An operator may also interface with a robot for productive purposes.

2.22 OPPOSITE POLARITY – A difference of potential between two points, where shorting of these two points would result in a condition involving overload, rupturing of printed-wiring board foil pattern, components, or fuses, and the like.

2.23 PAYLOAD – The rated mass of the end-effector and material, that can be handled by a robot in a normal and continuous operation. Other mechanical characteristics may also affect payload rating, such as center of mass, etc.

2.24 PENDANT – Hand held unit linked to the control system with which a robot can be programmed or moved.

©ISO. This material is reproduced from ISO 10218-1:2011 with permission of the American National Standards Institute (ANSI) on behalf of the International Standardization Organization. All rights reserved.

2.25 PERFORMANCE LEVEL (PL) – Discrete level used to specify the ability of safety-related parts of control systems to perform a safety function under foreseeable conditions.

©ISO. This material is reproduced from ISO 13849-1:2015 with permission of the American National Standards Institute (ANSI) on behalf of the International Standardization Organization. All rights reserved.

2.26 POLLUTION – Any addition of contaminants, solid, liquid or gaseous (ionized gases), and moisture that may produce a reduction of dielectric strength or surface resistivity.

2.27 POLLUTION DEGREE – The level of pollution present at the location on or in a product where the clearance and creepage distance measurement is made, and can be controlled by design of the product. For example, enclosures can be used to achieve Pollution Degree 3, heaters within enclosures can help achieve Pollution Degree 2, and encapsulation can be used to achieve Pollution Degree 1.

2.28 PRIMARY CIRCUIT – The wiring and components that are conductively connected to the supply circuit.

2.29 PROGRAM –

a) A sequence of instructions to be executed by the computer or robot controller to control a robot/robot system;

b) To furnish (a computer) with a code of instructions;

c) To teach a robot system a specific set of movements and instructions to accomplish a task.

2.30 PROTECTIVE DEVICE– A device designed, constructed and installed to create a sensing field or area to detect an intrusion into that field or area by personnel, robot(s), or other objects.

2.31 PROTECTIVE STOP – Type of interruption of operation that allows a cessation of motion and related hazards for safeguarding purposes and which retains the program logic to facilitate a restart.

Adapted by UL from ISO 10218-1:2011 with permission of the American National Standards Institute (ANSI) on behalf of the International Organization of Standardization. All rights reserved.

This document is only permissible for use by MOHD AKHTAR of AECOM Technical Services Inc.. 8/15/2023 2:28:53 PM

Documents
Document Sharing Hub

ULSE INC. COPYRIGHTED MATERIAL – NOT AUTHORIZED FOR FURTHER REPRODUCTION OR DISTRIBUTION WITHOUT PERMISSION FROM ULSE INC.

Full document details: UL 1740 2023

2.32 QUALIFIED PERSON – One familiar with the construction and operation of the equipment and the hazard(s) involved.

2.33 REDUNDANCY – The application of more than one device or system, or part of a device or a system, such that if one fails to perform its function, another is available to perform that function.

2.34 RISK OF ELECTRIC SHOCK – Under normal conditions a risk of electric shock exists between any two conductive parts or between a conductive part and earth ground if the continuous current flow between the two points exceeds the leakage current limits determined by the Leakage Current Test, Section 47, and if the open circuit voltage exceeds the limits in Table 2.1. Under fault or abnormal conditions: a risk of electric shock is considered to exist at any part at the potentials in Table 2.1 and when the continuous current flow through a 500 ohm resistor connected across the potential exceeds 5.0 mA.

Table 2.1
Risk of electric shock threshold

Waveform type [a]	Maximum voltage	
	Dry and damp locations	Wet locations
Sinusoidal ac	30 V rms	15 V rms
Non-sinusoidal ac	42.4 V peak	21.2 V peak
dc [b, c]	60 V	30 V

[a] The voltage limits for a composite AC + DC waveform (V peak) shall be per Figure 2.1 based on the Direct Voltage component (V DC) of the waveform. The graph line for locations where wet contact is not likely to occur refers to Dry and Damp locations. The graph line for locations where wet contact is likely to occur refers to wet locations.

[b] If the peak-to-peak ripple voltage on a dc waveform exceeds 10 percent of the dc voltage, the waveform shall be considered a composite waveform per footnote a above.

[c] DC waveforms interrupted at frequencies between 10 – 200 Hz shall be limited to 24.8 V in dry and damp locations, and 12.4 V in wet locations.

This document is only permissible for use by MOHD AKHTAR of AECOM Technical Services Inc.. 8/15/2023 2:28:53 PM

Documents
Document Sharing Hub
ULSE INC. COPYRIGHTED MATERIAL – NOT AUTHORIZED FOR FURTHER REPRODUCTION OR DISTRIBUTION WITHOUT PERMISSION FROM ULSE INC.
Full document details: UL 1740 2023

Figure 2.1

Voltage limits

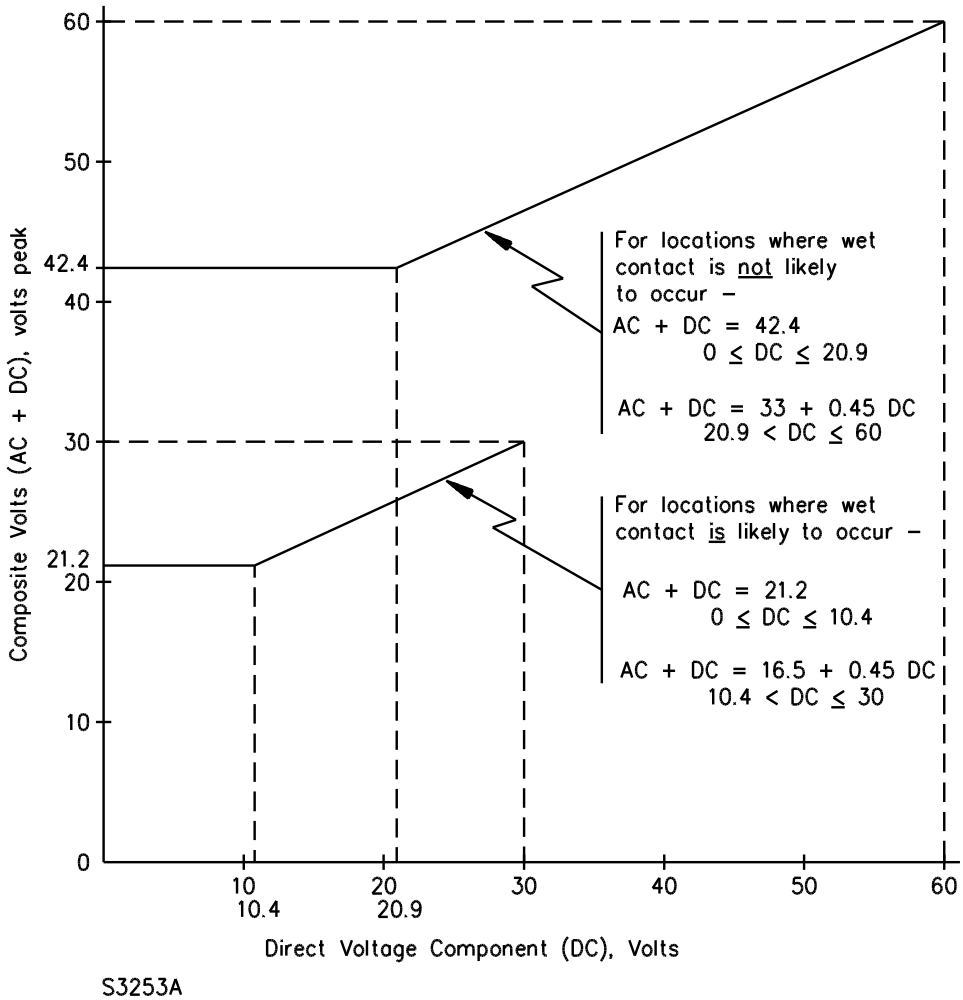

This document is only permissible for use by MOHD AKHTAR of AECOM Technical Services Inc.. 8/15/2023 2:28:53 PM

Documents
Document Sharing Hub
ULSE INC. COPYRIGHTED MATERIAL – NOT AUTHORIZED FOR FURTHER REPRODUCTION OR DISTRIBUTION WITHOUT PERMISSION FROM ULSE INC.
Full document details: UL 1740 2023

2.35 RISK OF FIRE – A risk of fire is considered to exist at any two points in a circuit where the open circuit voltage is more than 42.4 V peak and the energy available to the circuit under any condition of load including short circuit, results in a current of 8 A or more after 1 minute of operation.

2.36 ROBOT – Actuated mechanism programmable in two or more axes with a degree of autonomy, moving within its environment, to perform intended tasks.

1 A robot includes the control system and interface of the control system.

2 The classification of robot into industrial robot or service robot is done according to its intended application.

©ISO. This material is reproduced from ISO 8373:2012 with permission of the American National Standards Institute (ANSI) on behalf of the International Standardization Organization. All rights reserved.

2.37 ROBOTIC SYSTEM – A system that includes the robot (hardware and software) consisting of the robot, the end-effector(s), any equipment, devices, or sensors required for the robot to perform its tasks; and any communication interface that is operating and monitoring the robot, equipment, or sensors, as far as these peripheral devices are supervised by the robot control system.

2.38 SAFEGUARD – Guard or protective device.

©ISO. This material is reproduced from ISO 12100:2010 with permission of the American National Standards Institute (ANSI) on behalf of the International Standardization Organization. All rights reserved.

2.39 SAFETY CIRCUIT – A primary or secondary circuit containing a control that is relied upon to reduce a risk of fire, electric shock, or injury to persons at the controlled equipment.

2.40 SAFETY CONTROL – An automatic control and interlock (including relays, switches, and other auxiliary equipment used to form a system) that is intended to reduce the risk of fire, electric shock, or injury to persons.

2.41 SAFETY INTEGRITY LEVEL (SIL) – Discrete level (one out of a possible four), corresponding to a range of safety integrity values, where SIL 4 has the highest level of safety integrity and SIL 1 has the lowest.

©IEC. This material is reproduced from IEC 61508-4 Ed. 2.0 b:2010, with permission of the American Standards Institute (ANSI) on behalf of International Electrotechnical Commission. All rights reserved.

2.42 SAFETY-RELATED PART OF A CONTROL SYSTEM (SRP/CS) – Part of a control system that responds to safety-related input signals and generates safety-related output signals.

NOTE 1: The combined safety-related parts of a control system start at the point where the safety-related input signals are initiated (including, for example, the actuating cam and the roller of the position switch) and end at the output of the power control elements (including, for example, the main contacts of a contactor).

NOTE 2: If monitoring systems are used for diagnostics, they are also considered as SRP/CS.

©ISO. This material is reproduced from ISO 13849-1:2015 with permission of the American National Standards Institute (ANSI) on behalf of the International Standardization Organization. All rights reserved.

2.43 SECONDARY CIRCUIT – A circuit supplied from a secondary winding of an isolating transformer.

2.44 SENSOR – A device that responds to physical stimuli (such as heat, light, sound, pressure, magnetism, motion) and transmits the resulting signal or data providing a measurement, operating a control, or both.

This document is only permissible for use by MOHD AKHTAR of AECOM Technical Services Inc.. 8/15/2023 2:28:53 PM

Documents
Document Sharing Hub

ULSE INC. COPYRIGHTED MATERIAL – NOT AUTHORIZED FOR FURTHER REPRODUCTION OR DISTRIBUTION WITHOUT PERMISSION FROM ULSE INC.

Full document details: UL 1740 2023

2.45 SINGLE POINT OF CONTROL – The ability to operate the robot such that initiation of robot motion from one source of control is only possible from that source and cannot be overridden from another source.

2.46 SINGULARITY – Condition where the motion of a set of robot joints produces no net Cartesian motion (translational or rotational) of either the robot flange or the Tool Center Point (TCP). Cartesian motions that pass near this condition can produce unexpected high joint speeds, which can be hazardous. A singularity can also be defined as an occurrence whenever the rank of the Jacobian matrix becomes less than full rank – Mathematically, in a singular configuration, the joint velocity in joint space can become infinite to maintain Cartesian velocity. In actual operation, motions defined in Cartesian space that pass near singularities can produce high joint speeds. These high speeds can be unexpected to an operator. Figure 2.2 below demonstrates the robot behavior as the wrist passes near the 'shoulder' singularity, as the robot moves the tool linearly from point A (with the elbow at point C) to point B (with the elbow at point E), Joint 1 rotates rapidly from a configuration where the elbow is at point D, finally ending at configuration with the elbow at point E.

Adapted by UL from ISO 10218-1:2011 with permission of the American National Standards Institute (ANSI) on behalf of the International Organization of Standardization. All rights reserved.

Figure 2.2

Singularity diagram

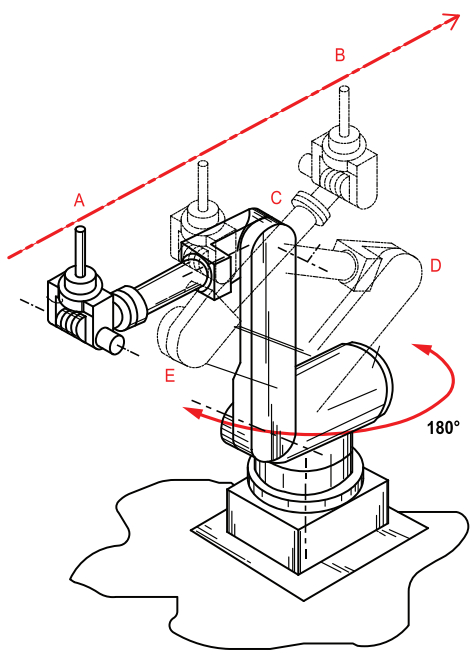

su2291

This modified figure above is being used with Permission from FANUC America Corporation.

2.47 SPACE – Three dimensional volume.

©ISO. This material is reproduced from ISO 10218-1:2011 with permission of the American National Standards Institute (ANSI) on behalf of the International Standardization Organization. All rights reserved.

2.48 SPACE, MAXIMUM – Space which can be swept by the moving parts of the robot as defined by the manufacturer plus the space which can be swept by the end-effector and the workpiece.

This document is only permissible for use by MOHD AKHTAR of AECOM Technical Services Inc.. 8/15/2023 2:28:53 PM

Documents Document Sharing Hub

ULSE INC. COPYRIGHTED MATERIAL – NOT AUTHORIZED FOR FURTHER REPRODUCTION OR DISTRIBUTION WITHOUT PERMISSION FROM ULSE INC.

Full document details: UL 1740 2023

©ISO. This material is reproduced from ISO 10218-1:2011 with permission of the American National Standards Institute (ANSI) on behalf of the International Standardization Organization. All rights reserved.

2.49 SPACE, OPERATING – Portion of the restricted space that is actually used while performing all motions commanded by the task program.

©ISO. This material is reproduced from ISO 10218-1:2011 with permission of the American National Standards Institute (ANSI) on behalf of the International Standardization Organization. All rights reserved.

2.50 SPACE, RESTRICTED – Portion of the maximum space restricted by limiting devices that establish limits which will not be exceeded.

©ISO. This material is reproduced from ISO 10218-1:2011 with permission of the American National Standards Institute (ANSI) on behalf of the International Standardization Organization. All rights reserved.

2.51 SPACE, SAFEGUARDED – Space defined by the perimeter safeguarding.

©ISO. This material is reproduced from ISO 10218-1:2011 with permission of the American National Standards Institute (ANSI) on behalf of the International Standardization Organization. All rights reserved.

2.52 STATIONARY EQUIPMENT – Hard wired or cord- and plug-connected equipment that is intended to be fastened in place, or located in a dedicated space.

2.53 TEACHER – A person who provides the robot with a specific set of instructions to perform a task.

2.54 TOOL CENTER POINT (TCP) – The origin of the tool coordinate system.

2.55 USER SERVICING – Any form of servicing that can be performed by personnel other than those who are trained to maintain the particular equipment is considered user servicing. Some examples of user servicing are:

a) The attachment of accessories by means of attachment plugs and receptacles or by means of other separable connectors;

b) The changing of magnetic, electronic (USB sticks, flash memory, etc.) or optical media and the like that do not involve complicated operations;

c) The replacement of disks, or programmable logic boards. Replacement of lamps and fuses and resetting of circuit breakers located in an operator-access area unless the lamps, fuses, or circuit breakers are marked to indicate replacement or resetting only by qualified service personnel;

d) The marking of routine operating adjustments necessary to adapt the unit for its different intended functions;

d) Routine cleaning of data-handling media.

2.56 WET LOCATION – Portions of an indoor installation where occasional or continuous exposure to water (for example: mist, spray, cutting jet) or other liquids is anticipated.

3 Components

3.1 Except as indicated in 3.2, a component of a product covered by this standard shall comply with the requirements for that component. See Appendix A for a list of standards covering components generally used in the products covered by this standard.

3.2 A component is not required to comply with a specific requirement that:

This document is only permissible for use by MOHD AKHTAR of AECOM Technical Services Inc.. 8/15/2023 2:28:53 PM

Documents
Document Sharing Hub

ULSE INC. COPYRIGHTED MATERIAL – NOT AUTHORIZED FOR FURTHER REPRODUCTION OR DISTRIBUTION WITHOUT PERMISSION FROM ULSE INC.

Full document details: UL 1740 2023

a) Involves a feature or characteristic not required in the application of the component in the product covered by this standard, or

b) Is superseded by a requirement in this standard.

3.3 A component shall be used in accordance with its rating established for the intended conditions of use.

3.4 Specific components are incomplete in construction features or restricted in performance capabilities. Such components are intended for use only under limited conditions, such as certain temperatures not exceeding specified limits, and shall be used only under those specific conditions.

4 Units of Measurement

4.1 Values stated without parentheses are the requirement. Values in parentheses are explanatory or approximate information.

4.2 Unless indicated otherwise, all voltage and current values are nominal rms values.

5 Undated References

5.1 Any undated reference to a code or standard appearing in the requirements of this standard shall be interpreted as referring to the latest edition of that code or standard.

CONSTRUCTION

6 General

6.1 Robotic equipment shall employ materials that are acceptable for the application and shall be made and finished with the degree of uniformity and grade of workmanship practicable in a well-equipped factory.

7 Frame and Enclosure

7.1 General

7.1.1 Robotic equipment shall be constructed and assembled so that it will have the strength and rigidity necessary to resist the abuses and the environment to which it is likely or intended to be subjected, without increasing the risk of fire, electric shock, or injury to persons due to total or partial collapse resulting in a reduction of spacings, loosening or displacement of parts, or other serious defects. Examples of intended environment, in addition to normal use, may include water spray, water cutting, hosedown (cleaning), oil, noncorrosive liquids, corrosive liquids and gases, dust, and the like. See Robots Intended for Use in Water Environments, Section 48, Enclosure Test, Section 76, and Gasket Tests, Section 78 for selected tests.

7.2 Cast metal

7.2.1 A cast-metal enclosure shall be at least 3.2 mm (1/8 in) thick at every point, more than 3.2 mm (1/8 in) thick at reinforcing ribs and door edges, and at least 6.4 mm (1/4 in) thick at tapped holes for conduit.

Exception: Other than at plain or threaded conduit holes, malleable iron and die-cast or permanent mold cast aluminum, brass, bronze, or zinc shall be:

This document is only permissible for use by MOHD AKHTAR of AECOM Technical Services Inc.. 8/15/2023 2:28:53 PM

Documents
Document Sharing Hub

ULSE INC. COPYRIGHTED MATERIAL – NOT AUTHORIZED FOR FURTHER REPRODUCTION OR DISTRIBUTION WITHOUT PERMISSION FROM ULSE INC.

Full document details: UL 1740 2023

a) At least 2.4 mm (3/32 in) thick for an area greater than 155 cm^2 (24 in^2) or having any dimension more than 152 mm (6 in); and

b) At least 1.6 mm (1/16 in) thick for an area of 155 cm^2 (24 in^2) or less having no dimension more than 152 mm (6 in). The area considered may be bounded by reinforcing ribs subdividing a larger area.

7.3 Sheet metal

7.3.1 The thickness of a sheet-metal enclosure shall not be less than that specified in Table 7.1 and Table 7.2, except that at points to which a wiring system is to be connected, uncoated steel shall be at least 0.81 mm (0.032 in) thick, zinc-coated steel at least 0.86 mm (0.034 in) thick, and nonferrous metal at least 1.14 mm (0.045 in) thick.

Exception: Enclosure thickness at points other than where a wiring system is to be connected need not comply with these requirements if the enclosure complies with the requirements in the Compression Test and Deflection Test in the Standard for Enclosures for Electrical Equipment, Non-Environmental Considerations, UL 50.

Table 7.1
Thickness of sheet metal for enclosures – carbon steel or stainless steel

Without supporting frame[a]				With supporting frame or equivalent reinforcing[a]				Minimum thickness			
Maximum width[b]		Maximum length[c]		Maximum width[b]		Maximum length		Uncoated		Metal coated	
cm	(in)	cm	(in)	cm	(in)	cm	(in)	mm	(in)	mm	(in)
10.2	(4.0)	Not limited		15.9	(6.25)	Not limited		0.51	(0.020)[d]	0.58	(0.023)[d]
12.1	(4.75)	14.6	(5.75)	17.1	(6.75)	21.0	(8.25)				
15.2	(6.0)	Not limited		24.1	(9.5)	Not limited		0.66	(0.026)[d]	0.74	(0.029)[d]
17.8	(7.0)	22.2	(8.75)	25.4	(10.0)	31.8	(12.5)				
20.3	(8.0)	Not limited		30.5	(12.0)	Not limited		0.81	(0.032)	0.86	(0.034)
22.9	(9.0)	29.2	(11.5)	33.0	(13.0)	40.6	(16.0)				
31.8	(12.5)	Not limited		49.5	(19.5)	Not limited		1.07	(0.042)	1.14	(0.045)
35.6	(14.0)	45.7	(18.0)	53.3	(21.0)	63.5	(25.0)				
45.7	(18.0)	Not limited		68.6	(27.0)	Not limited		1.35	(0.053)	1.42	(0.056)
50.8	(20.0)	63.5	(25.0)	73.7	(29.0)	91.4	(36.0)				
55.9	(22.0)	Not limited		83.8	(33.0)	Not limited		1.52	(0.060)	1.60	(0.063)
63.5	(25.0)	78.7	(31.0)	88.9	(35.0)	109.2	(43.0)				
63.5	(25.0)	Not limited		99.1	(39.0)	Not limited		1.70	(0.067)	1.78	(0.070)
73.7	(29.0)	91.4	(36.0)	104.1	(41.0)	129.5	(51.0)				
83.8	(33.0)	Not limited		129.5	(51.0)	Not limited		2.03	(0.080)	2.13	(0.084)
96.5	(38.0)	119.4	(47.0)	137.2	(54.0)	167.6	(66.0)				
106.7	(42.0)	Not limited		162.6	(64.0)	Not limited		2.36	(0.093)	2.46	(0.097)
119.4	(47.0)	149.9	(59.0)	172.7	(68.0)	213.4	(84.0)				
132.1	(52.0)	Not limited		203.2	(80.0)	Not limited		2.74	(0.108)	2.82	(0.111)
152.4	(60.0)	188.0	(74.0)	213.4	(84.0)	261.6	(103.0)				
160.0	(63.0)	Not limited		246.4	(97.0)	Not limited		3.12	(0.123)	3.20	(0.126)

Table 7.1 Continued on Next Page

This document is only permissible for use by MOHD AKHTAR of AECOM Technical Services Inc.. 8/15/2023 2:28:53 PM

Documents
Document Sharing Hub

ULSE INC. COPYRIGHTED MATERIAL – NOT AUTHORIZED FOR FURTHER REPRODUCTION OR DISTRIBUTION WITHOUT PERMISSION FROM ULSE INC.

Full document details: UL 1740 2023

Table 7.1 Continued

Without supporting frame[a]				With supporting frame or equivalent reinforcing[a]				Minimum thickness			
Maximum width[b]		Maximum length[c]		Maximum width[b]		Maximum length		Uncoated		Metal coated	
cm	(in)	cm	(in)	cm	(in)	cm	(in)	mm	(in)	mm	(in)
185.4	(73.0)	228.6	(90.0)	261.6	(103.0)	322.6	(127.0)				

[a] See 7.3.3.

[b] The width is the smaller dimension of a rectangular piece of sheet metal that is part of an enclosure. Adjacent surfaces of an enclosure may have common supports and be made of a single sheet.

[c] Not limited applies only if the edge of the surface is flanged at least 12.7 mm (1/2 in) or fastened to adjacent surfaces not normally removed in use.

[d] Sheet steel for an enclosure intended for outdoor use – raintight or rainproof – shall not be less than 0.86 mm (0.034 in) thick if zinc coated and not less than 0.81 mm (0.032 in) thick if uncoated.

Table 7.2
Thickness of sheet metal for enclosures – aluminum, copper, or brass

Without supporting frame[a]				With supporting frame or equivalent reinforcing[a]				Minimum thickness	
Maximum width[b]		Maximum length[c]		Maximum width[b]		Maximum length			
cm	(in)	cm	(in)	cm	(in)	cm	(in)	mm	(in)
7.6	(3.0)	Not limited		17.6	(7.0)	Not limited			
8.9	(3.5)	10.2	(4.0)	21.6	(8.5)	24.1	(9.5)	0.58	(0.023)[d]
10.2	(4.0)	Not limited		25.4	(10.0)	Not limited			
12.7	(5.0)	15.2	(6.0)	26.7	(10.5)	34.3	(13.5)	0.74	(0.029)
15.2	(6.0)	Not limited		35.6	(14.0)	Not limited			
16.5	(6.5)	20.3	(8.0)	38.1	(15.0)	45.7	(18.0)	0.91	(0.036)
20.3	(8.0)	Not limited		48.3	(19.0)	Not limited			
24.1	(9.5)	29.2	(11.5)	53.3	(21.0)	63.5	(25.0)	1.14	(0.045)
30.5	(12.0)	Not limited		71.1	(28.0)	Not limited			
35.6	(14.0)	40.6	(16.0)	76.2	(30.0)	94.0	(37.0)	1.47	(0.058)
45.7	(18.0)	Not limited		106.7	(42.0)	Not limited			
50.8	(20.0)	63.4	(25.0)	114.3	(45.0)	139.7	(55.0)	1.91	(0.075)
63.5	(25.0)	Not limited		152.4	(60.0)	Not limited			
73.7	(29.0)	91.4	(36.0)	162.6	(64.0)	198.1	(78.0)	2.41	(0.095)
94.0	(37.0)	Not limited		221.0	(87.0)	Not limited			
106.7	(42.0)	134.6	(53.0)	236.2	(93.0)	289.6	(114.0)	3.10	(0.122)
132.1	(52.0)	Not limited		312.4	(123.0)	Not limited			
152.4	(60.0)	188.0	(74.0)	330.2	(130.0)	406.4	(160.0)	3.89	(0.153)

[a] See 7.3.3.

[b] The width is the smaller dimension of a rectangular piece of sheet metal that is part of an enclosure. Adjacent surfaces of an enclosure may have common supports and be made of a single sheet.

[c] Not limited applies only if the edge of the surface is flanged at least 12.7 mm (1/2 in) or fastened to adjacent surfaces not normally removed in use.

[d] Sheet copper, brass, or aluminum for an enclosure intended for outdoor use – raintight or rainproof – shall not be less than 0.74 mm (0.029 in) thick.

This document is only permissible for use by MOHD AKHTAR of AECOM Technical Services Inc.. 8/15/2023 2:28:53 PM

Documents
Document Sharing Hub
ULSE INC. COPYRIGHTED MATERIAL – NOT AUTHORIZED FOR FURTHER REPRODUCTION OR DISTRIBUTION WITHOUT PERMISSION FROM ULSE INC.
Full document details: UL 1740 2023

7.3.2 Table 7.1 and Table 7.2 are based on a uniform deflection of the enclosure surface for any given load concentrated at the center of the surface regardless of metal thickness.

7.3.3 With reference to Table 7.1 and Table 7.2, a supporting frame is a structure of angle or channel or folded rigid section of sheet metal that is rigidly attached to and has essentially the same outside dimensions as the enclosure surface and that has sufficient torsional rigidity to resist the bending moments that may be applied by the enclosure surface when it is deflected. A structure that is as rigid as one built with a frame of angles or channels is considered to have equivalent reinforcing. Constructions considered to be without supporting frame include:

a) A single sheet with single formed flanges – formed edges;

b) A single sheet that is corrugated or ribbed;

c) An enclosure surface loosely attached to a frame – for example, with spring clips; and

d) An enclosure surface having an unsupported edge.

7.3.4 An enclosure shall be constructed to reduce the risk of unintentional contact with enclosed electrical devices, and to provide internal devices with protection from specified external conditions.

7.3.5 An air filter acting as an enclosure part shall comply with the requirements for Class 1 filters as specified in the Standard for Air Filter Units, UL 900. If abnormal tests show that no equivalent flame barrier exists, then an air filter is not considered to be an enclosure part and may be omitted from these requirements.

7.4 Doors and covers

7.4.1 A part of an enclosure, such as a door or a cover, shall be provided with a means – such as latches, locks, interlocks, or screws – for firmly securing it in place.

Exception: A snap-on cover that complies with the requirements in Securement of Snap-On Cover Test, Section 80, need not have additional securing means.

7.4.2 An enclosure cover shall be hinged if it gives access to a fuse or any other overload-protective device that requires renewal, or if it is necessary to open the cover in connection with the normal operation of the device.

Exception: A hinged cover is not required for an enclosure:

a) To which access is required only in the event of burnout of a current element or the like on short circuit;

b) In which the only fuse enclosed is a control-circuit fuse, if the fuse and control-circuit load – other than a fixed control-circuit load, such as a pilot lamp – are within the same enclosure; or

c) In which a means is provided for resetting all overload-protective devices from outside the enclosure, or kits are available to provide a means for resetting all overload-protective devices from outside the enclosure. (See Manufacturer's Documentation, Section 92.)

7.4.3 Other than as noted in 7.4.4, a hinged cover provided in accordance with the requirement in 7.4.2 shall be provided with a snap latch or a captive multi-turn or partial-turn fastener. Such securing means shall be located or used in multiple so as to hold the cover closed over its entire length. A captive fastener shall be operable by hand or by a simple hand tool such as a screwdriver.

This document is only permissible for use by MOHD AKHTAR of AECOM Technical Services Inc.. 8/15/2023 2:28:53 PM

Documents
Document Sharing Hub

ULSE INC. COPYRIGHTED MATERIAL – NOT AUTHORIZED FOR FURTHER REPRODUCTION OR DISTRIBUTION WITHOUT PERMISSION FROM ULSE INC.

Full document details: UL 1740 2023

7.4.4 A door more than 1.2 m (48 in) long on the hinged side shall be provided with one of the following:

a) A multipoint latch operated by a single knob or handle; or

b) Two or more snap latches or captive fasteners; or

c) One knob-operated latch and one snap latch or captive fastener.

7.4.5 A hinged cover enclosure that is not required to comply with 7.4.2 may use noncaptive fasteners.

7.4.6 A door giving access to a fuse or any portion of a circuit breaker other than the operating handle shall shut closely against a 6.4 mm (1/4 in) rabbet as illustrated in Figure 7.1 or the equivalent.

Figure 7.1

Rabbet

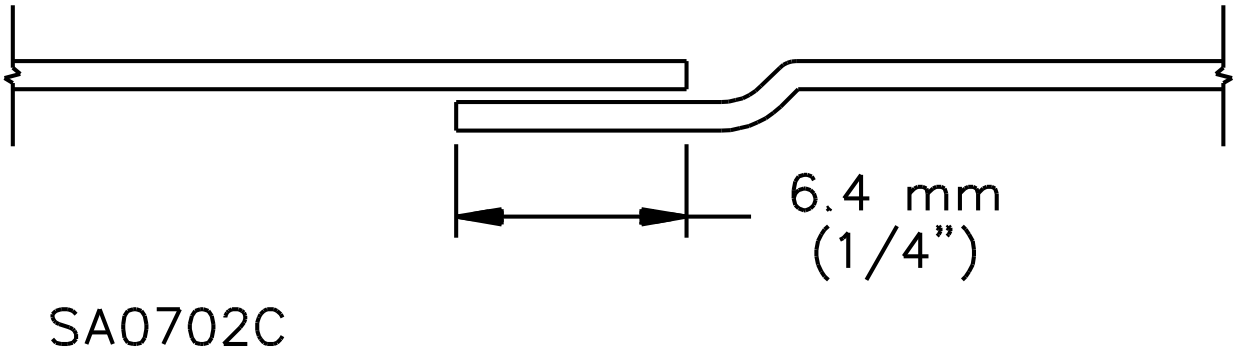

7.4.7 A cover giving access to a fuse or any portion of a circuit breaker other than the operating handle shall have flanges for the full length of the four edges. Flanges on a cover shall fit closely with the outside walls of the enclosure, and shall comply with Figure 7.2 and Table 7.3. An acceptable combination of flange and rabbet may be used.

Exception: The flange width may be less than that specified if the construction complies with the Deflection Test in the Standard for Enclosures for Electrical Equipment, Non-Environmental Considerations, UL 50.

This document is only permissible for use by MOHD AKHTAR of AECOM Technical Services Inc.. 8/15/2023 2:28:53 PM

Documents
Document Sharing Hub

ULSE INC. COPYRIGHTED MATERIAL – NOT AUTHORIZED FOR FURTHER REPRODUCTION OR DISTRIBUTION WITHOUT PERMISSION FROM ULSE INC.

Full document details: UL 1740 2023

Figure 7.2

Flanged cover constructions[a]

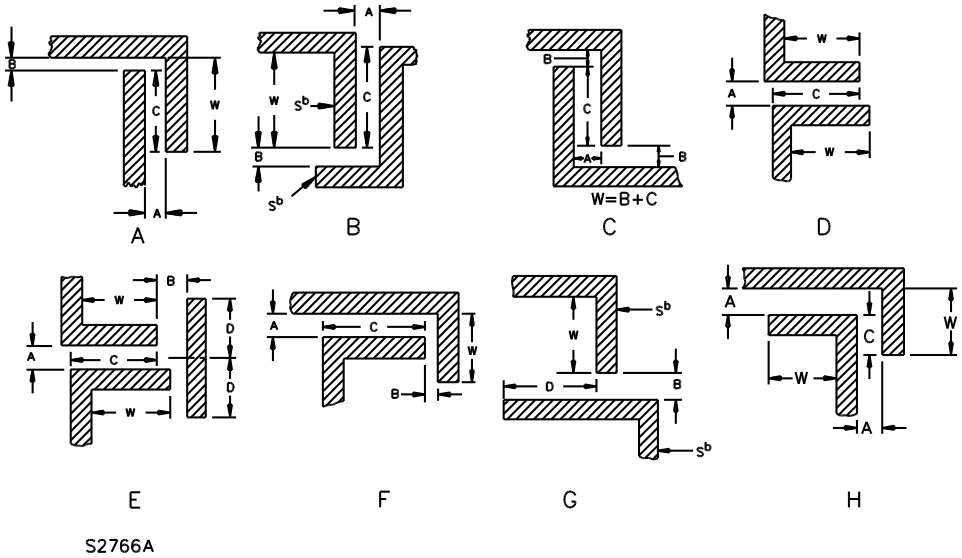

[a] See Table 7.3 for dimensions for sketches A – H.
[b] The surfaces "S" may be in line with one another – not as shown.

This document is only permissible for use by MOHD AKHTAR of AECOM Technical Services Inc.. 8/15/2023 2:28:53 PM

ULSE INC. COPYRIGHTED MATERIAL – NOT AUTHORIZED FOR FURTHER REPRODUCTION OR DISTRIBUTION WITHOUT PERMISSION FROM ULSE INC.

Documents
Document Sharing Hub

Table 7.3
Dimensions for flanged cover constructions

Sketch – see Figure 7.2	Dimensions									
	W Minimum flange width[a]		A Maximum space between parts		B Maximum gap		C Minimum overlap		D Minimum barrier extension	
	mm	(in)	mm	(in)	mm	(in)	mm	(in)	mm	(in)
A	12.7	(1/2)	3.2	(1/8)	3.2	(1/8)	11.1	(7/16)	–	–
A	19.1	(3/4)	4.8	(3/16)	4.8	(3/16)	15.9	(5/8)	–	–
A	25.4	(1)	6.4	(1/4)	6.4	(1/4)	22.2	(7/8)	–	–
B	12.7	(1/2)	3.2	(1/8)	3.2	(1/8)	11.1	(7/16)	–	–
B	19.1	(3/4)	4.8	(3/16)	4.8	(3/16)	15.9	(5/8)	–	–
B	25.4	(1)	6.4	(1/4)	6.4	(1/4)	22.2	(7/8)	–	–
C	12.7	(1/2)	4.8	(3/16)	4.8	(3/16)	6.4	(1/4)	–	–
C	19.1	(3/4)	6.4	(1/4)	6.4	(1/4)	11.1	(7/16)	–	–
D	12.7	(1/2)	2.4	(3/32)	–	–	11.1	(7/16)	–	–
E	12.7	(1/2)	3.2	(1/8)	3.2	(1/8)	11.1	(7/16)	6.4	(1/4)
F	12.7	(1/2)	3.2	(1/8)	6.4	(1/4)	11.1	(7/16)	–	–
G[b]	12.7	(1/2)	–	–	0.8	(1/32)	–	–	(12.7)	(1/2)
H	6.4	(1/4)	3.2	(1/8)	–	–	4.8	(3/16)	–	–

[a] Tolerance: minus 1.6 mm (1/16 in).

[b] Equipment within the enclosure must be located on the side of the barrier extension D that is opposite the gap B.

7.4.8 To determine whether a flanged cover complies with the requirement in 7.4.7 regarding width of flange, the distance between the flat portion of the cover – clear of forming radii, beads, draws, and the like – and a straight edge placed anywhere across any two flanges at any points is to be measured.

7.4.9 A gasket that is required for an electrical enclosure to maintain a tight fit or to comply with the enclosure performance requirements shall be secured with adhesive or by mechanical means. The gasket and its securing means shall not be damaged when the joint is opened. A construction involving a gasketed joint that provides the intended tight fit shall be investigated to determine whether it is acceptable for the application.

7.4.10 Figure 7.3 illustrates the method of determining the amount of overlap between a flat cover and a flanged box wall and the amount of overlap at a corner or box seam. If the radius of the flange bend is small, the flange width and overlap are considered to be W1 or W2, depending upon the actual construction, and shall be at least 12.7 mm (1/2 in). If the radius of the flange bend is excessive or if the flat sheet is on the inside of the flange, the overlap, W3 or W4, is to be measured over only that portion where the two pieces of metal are actually in contact with each other, and shall be at least 12.7 mm (1/2 in).

This document is only permissible for use by MOHD AKHTAR of AECOM Technical Services Inc.. 8/15/2023 2:28:53 PM

Documents
Document Sharing Hub
ULSE INC. COPYRIGHTED MATERIAL – NOT AUTHORIZED FOR FURTHER REPRODUCTION OR DISTRIBUTION WITHOUT PERMISSION FROM ULSE INC.
Full document details: UL 1740 2023

Figure 7.3

Overlap between flat cover and box flange and at corner or box seam

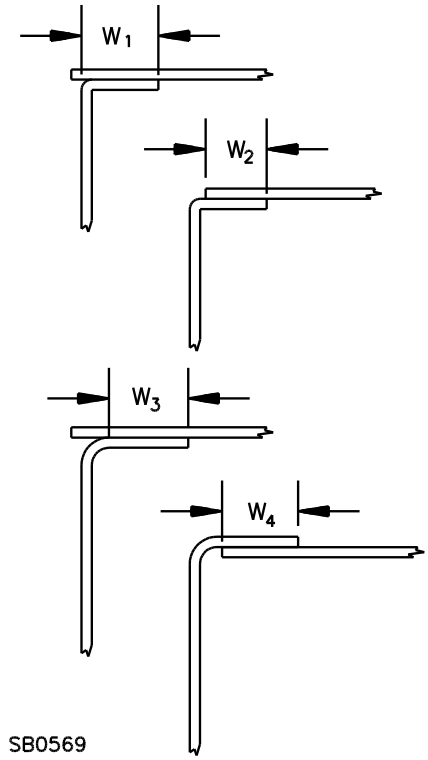

7.4.11 To determine the overlap of a telescoping cover, the enclosure is to be placed on its back on a bench, with the cover in its normally closed position, and a mark is to be scribed on all walls of the box along the edge of the flange. The overlap is the measured distance between the scribe marks and the edges of the box walls, noted as W4 in Figure 7.3. In scribing the marks, the cover is to be held in a fixed position with sufficient firmness to prevent displacement of the cover by the scribing tool, but without bending or distorting any portion of the box, cover, or other part of the enclosure.

7.4.12 A flat strip used to provide a rabbet, or an angle strip fastened to the edges of a door giving access to a fuse or any portion of a circuit breaker, other than the operating handle, shall be at least 60 percent of the required thickness of the metal box, but not less than 1.07 mm (0.042 in) if of uncoated steel, not less than 1.14 mm (0.045 in) if of zinc-coated steel, and not less than 1.47 mm (0.058 in) thick if of nonferrous metal. It shall be secured at no fewer than two points. There shall not be more than 38 mm (1-1/2 in) between an end of the strip and a point at which it is secured, and the distance between adjacent points at which the strip is secured shall not be more than 152 mm (6 in).

7.4.13 The continuity of a bonding means for a snap-on or fastener-attached cover shall comply with the requirements in Bonding of Internal Parts, Section 21.

7.5 Nonmetallic – General

7.5.1 The requirements in 7.5.2 – 7.5.5 cover polymeric enclosures.

7.5.2 A nonmetallic enclosure or enclosure part shall have mechanical strength and durability and be formed so that operating parts will be protected against damage and shall resist the abuses likely to be encountered during installation and normal use and service.

This document is only permissible for use by MOHD AKHTAR of AECOM Technical Services Inc.. 8/15/2023 2:28:53 PM

Documents
Document Sharing Hub

ULSE INC. COPYRIGHTED MATERIAL – NOT AUTHORIZED FOR FURTHER REPRODUCTION OR DISTRIBUTION WITHOUT PERMISSION FROM ULSE INC.

Full document details: UL 1740 2023

7.5.3 An enclosure or enclosure part shall protect persons against a risk of electric shock, and the material shall not create or contribute to a risk of fire, electric shock, or injury to persons.

7.5.4 Among the factors that are to be taken into consideration when judging the acceptability of a nonmetallic enclosure are:

a) Mechanical strength;

b) Resistance to impact;

c) Moisture absorption;

d) Resistance to combustion and to ignition from electrical sources;

e) Dielectric properties, insulation resistance, and resistance to arc tracking; and

f) Resistance to distortion and creeping at temperatures to which the material may be subjected under conditions of normal or abnormal use.

A material shall not display a loss of these properties beyond the minimum acceptable level as a result of aging. Tests on nonmetallic enclosures for portable equipment, stationary equipment and equipment intended to be permanently connected electrically shall be conducted in accordance with requirements in the Standard for Polymeric Materials – Use in Electrical Equipment Evaluations, UL 746C.

7.5.5 A polymeric enclosure intended for connection to a rigid metal conduit system shall comply with the Polymeric Enclosure Rigid Metallic Conduit Connection Test in the Standard for Enclosures for Electrical Equipment, Non-Environmental Considerations, UL 50.

7.6 Bonding

7.6.1 Nonmetallic robotic equipment shall be marked in accordance with 91.10 if a bonding means is not provided.

7.7 Parts of enclosures

7.7.1 A part, such as a dial or nameplate, that is a part of an enclosure shall be metal or other material as specified for the enclosure in 7.7.2 and 7.7.3.

7.7.2 A nonmetallic part, such as a reset knob, lever, or button not larger than an area of 6.45 cm^2 (1 in^2), that protrudes through a hole in the enclosure, shall be made of material rated V-2 or better in accordance with the requirements in the Standard for Tests for Flammability of Plastic Materials for Parts in Devices and Appliances, UL 94.

7.7.3 A nonmetallic part that protrudes through an enclosure hole having an area larger than 6.45 cm^2 (1 in^2) shall be made of a material that complies with the requirements in 7.5.2 – 7.5.4, and material requirements of 7.7.2.

7.8 Windows

7.8.1 Glass covering an observation opening or the like shall be secured in place so that it cannot be readily displaced in service, and shall provide mechanical protection for the enclosed parts.

7.8.2 Glass for an opening not more than 101.6 mm (4 in) in any dimension shall not be less than 1.6 mm (1/16 in) thick, and glass for a larger opening, but not more than 929 cm^2 (144 in^2) in area and having no

This document is only permissible for use by MOHD AKHTAR of AECOM Technical Services Inc.. 8/15/2023 2:28:53 PM

Document Sharing Hub
ULSE INC. COPYRIGHTED MATERIAL – NOT AUTHORIZED FOR FURTHER REPRODUCTION OR DISTRIBUTION WITHOUT PERMISSION FROM ULSE INC.
Full document details: UL 1740 2023

dimension greater than 304.8 mm (12 in), shall not be less than 3.2 mm (1/8 in) thick. Glass used to cover a larger area shall not be less than 3.2 mm (1/8 in) thick and shall conform to one of the following:

a) The glass shall be of a non-shattering or tempered type that, when broken, shall conform to the performance specifications in the Performance Specifications and Methods of Test for Safety Glazing Material Used in Buildings, ANSI Z97.1; or

b) The glass shall withstand the 3.39 J (2.5 lbf·ft) impact specified in Glass Window Impact Test, Section 79.

7.9 Openings in enclosures – Ventilating openings

7.9.1 A ventilating opening may be provided in an enclosure if the equipment requiring ventilation complies with 7.9.2 – 7.9.8 and is:

a) Housed in a separate ventilated portion of the enclosure or compartment; or

b) Housed in a separate ventilated enclosure or compartment.

7.9.2 A ventilating opening shall not be provided in a compartment or part of an enclosure that contains field-wiring splices in a line-voltage circuit.

7.9.3 A ventilating opening shall not be located in a mounting surface of an enclosure.

7.9.4 The shortest distance between a ventilating opening and the bottom of an enclosure or a wall-mounting surface shall be at least one-quarter of the enclosure height or depth, respectively, or 25.4 mm (1 in) whichever is less.

7.9.5 A ventilating opening may be provided in the bottom surface of an enclosure if the opening does not permit materials to fall directly out from the interior of the unit. Figure 7.4 illustrates a construction that meets this requirement.

This document is only permissible for use by MOHD AKHTAR of AECOM Technical Services Inc.. 8/15/2023 2:28:53 PM

Documents
Document Sharing Hub
ULSE INC. COPYRIGHTED MATERIAL – NOT AUTHORIZED FOR FURTHER REPRODUCTION OR DISTRIBUTION WITHOUT PERMISSION FROM ULSE INC.
Full document details: UL 1740 2023

Figure 7.4

Bottom surface ventilating openings

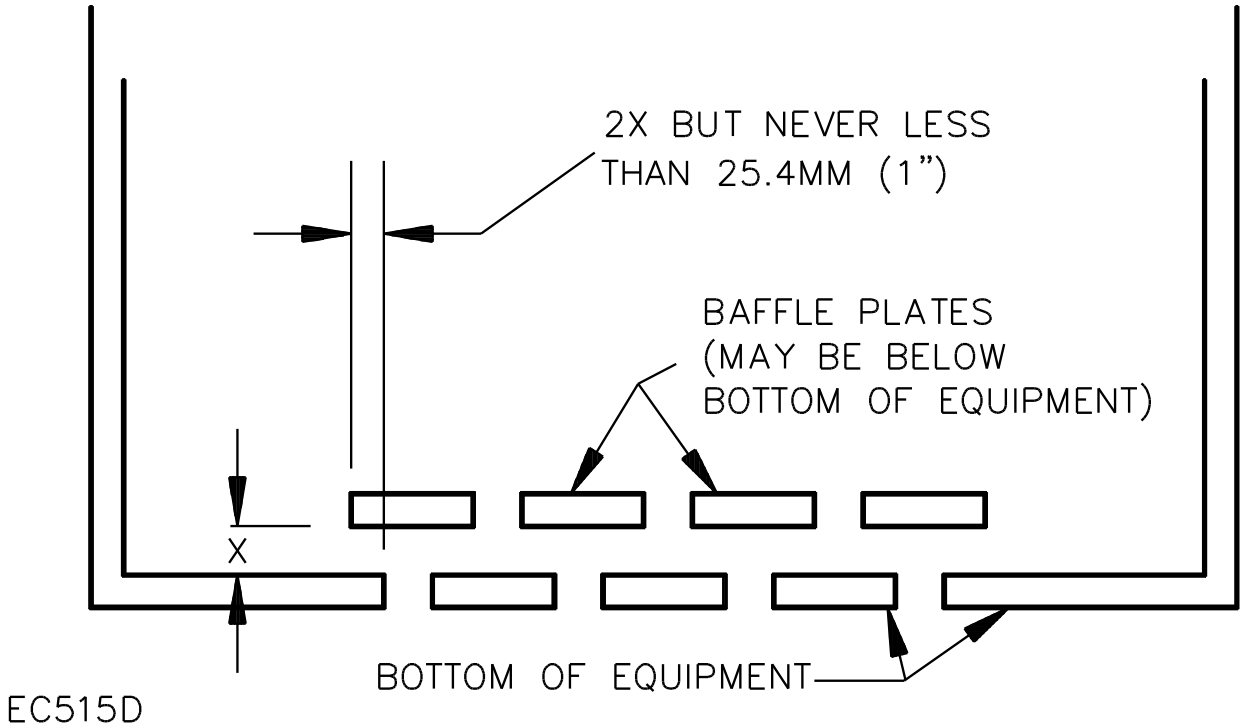

7.9.6 There shall be no emission of flame or molten material through a ventilating opening, or other risk of fire, during normal tests or during abnormal tests, such as transformer burnout and burnout of a relay with blocked armature.

7.9.7 Unless the construction of robotic equipment provided with forced ventilation is such that there is no direct path between live parts and the outlet opening, Abnormal Tests in addition to those mentioned in 7.9.6 shall be conducted to determine that there is no emission of flame or molten material through that opening.

7.9.8 Air from a ventilating opening, either forced or otherwise shall not be directed:

a) Into a duct or into a concealed space in a building;

b) Against the mounting surface; and

c) So that a disturbance would be propagated to other equipment.

8 Mounting

8.1 Robotic equipment that is intended to be fastened in place shall have provision for mounting it securely in position. Bolts, screws, or other parts used for mounting the equipment shall be independent of those used to secure components of the equipment to the frame, base, or panel.

8.2 If the equipment is mounted in a manner that permits removal without the use of tools, a cord connected means for electrical termination may be employed. A means for hanging or storage may be provided.

This document is only permissible for use by MOHD AKHTAR of AECOM Technical Services Inc.. 8/15/2023 2:28:53 PM

Documents
Document Sharing Hub

ULSE INC. COPYRIGHTED MATERIAL – NOT AUTHORIZED FOR FURTHER REPRODUCTION OR DISTRIBUTION WITHOUT PERMISSION FROM ULSE INC.

Full document details: UL 1740 2023

8.3 Actuating and emergency stop controls subject to rotational movement, where loosening mounting means can result in a hazard or loss of safety function, shall be mechanically secured by a means other than friction fit, such as through the use of a "D" shape, keyway, or the like.

9 Clearance

9.1 Where the conditions of maintenance and supervision assure that only qualified persons will service the installation, the dimensions of the working space in the direction of access to live parts operating at not over 150 volts – or areas of high temperature, high pressure, or moving parts which could result in the risk of injury to persons – that are likely to require examination, adjustment, servicing, or maintenance while energized shall be a minimum of 915 mm (3.0 ft). Where controls are enclosed in cabinets, the door(s) shall open at least 90 degrees or be removable.

10 Operating Mechanism

10.1 The robotic equipment shall be investigated under conditions of actual service to determine if it complies with all applicable requirements and is otherwise acceptable for its application.

10.2 The position of an operating handle shall be marked, if necessary, as a guide for proper operation.

10.3 A control that has or is intended to have a marked off position or an implied off position shall:

a) Open all ungrounded conductors of the circuit with an air gap when the actuator is in the off position; and

b) Be prevented from functioning automatically when in the off position either by a positive mechanical means or the equivalent.

10.4 When used for isolation or as a disconnect, with reference to the requirements in 10.3, the off state of a solid-state switch is not considered to be an open circuit.

10.5 A component – such as a resistor, capacitor, diode, and the like – shall not be connected across the contacts of a safety control or a protective or limiting device.

Exception: A component may be connected across the contacts of a safety control if investigated and found to be acceptable in the end product.

11 Accessibility of Uninsulated Live Parts, Film-Coated Wire, and Moving Parts

11.1 To reduce the likelihood of unintentional contact that may involve a risk of electric shock from an uninsulated live part or film-coated wire or injury to persons from a moving part, an opening in an enclosure shall comply with either (a) or (b).

a) For an opening that has a minor dimension (see 11.5) less than 25.4 mm (1 in), such a part or wire shall not be contacted by the probe illustrated in Figure 11.1.

b) For an opening that has a minor dimension of 25.4 mm (1 in) or more, such a part or wire shall be spaced from the opening as specified in Table 11.1.

Exception No. 1: A motor need not comply with these requirements if it complies with the requirements in 11.2.

Exception No. 2: Robotic equipment that has certain openings, such as openings for mechanical part movement in the enclosure need not comply with these requirements.

This document is only permissible for use by MOHD AKHTAR of AECOM Technical Services Inc.. 8/15/2023 2:28:53 PM

Documents
Document Sharing Hub

ULSE INC. COPYRIGHTED MATERIAL – NOT AUTHORIZED FOR FURTHER REPRODUCTION OR DISTRIBUTION WITHOUT PERMISSION FROM ULSE INC.

Full document details: UL 1740 2023

Figure 11.1

Articulated probe with web stop

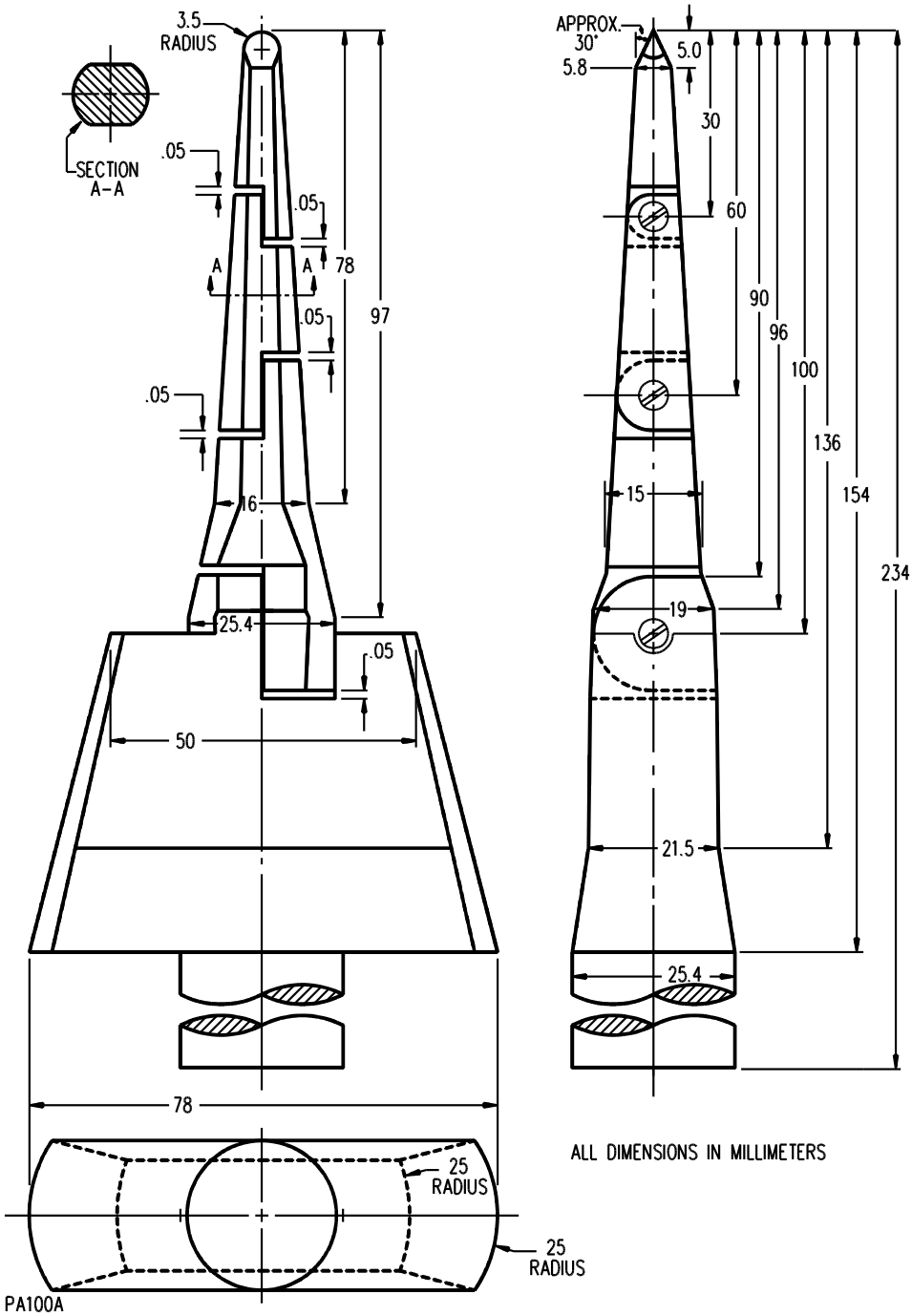

This document is only permissible for use by MOHD AKHTAR of AECOM Technical Services Inc.. 8/15/2023 2:28:53 PM

ULSE INC. COPYRIGHTED MATERIAL – NOT AUTHORIZED FOR FURTHER REPRODUCTION OR DISTRIBUTION WITHOUT PERMISSION FROM ULSE INC.

Documents
Document Sharing Hub