UL 1741

ISBN 0-7629-0421-6

Inverters, Converters, and Controllers for Use in Independent Power Systems

Documents
Document Sharing Hub

Full document details: UL 1741 2001

Documents
Document Sharing Hub

Full document details: UL 1741 2001

Underwriters Laboratories Inc. (UL)
333 Pfingsten Road
Northbrook, IL 60062-2096

UL Standard for Safety for Inverters, Converters, and Controllers for Use in Independent Power Systems, UL 1741

First Edition, Dated May 7, 1999

Revisions: This Standard contains revisions through and including January 17, 2001.

The revisions dated January 17, 2001 include a revised title. The previous title, Static Inverters and Charge Controllers for Use in Photovoltaic Power Systems, has been revised to Inverters, Converters, and Controllers for Use in Independent Power Systems.

Announcement Bulletin(s): This Standard contains the announcement bulletin(s) dated May 7, 1999. The announcement bulletin is located at the end of the Standard.

Text that has been changed in any manner is marked with a vertical line in the margin. Changes in requirements are marked with a vertical line in the margin and are followed by an effective date note indicating the date of publication or the date on which the changed requirement becomes effective.

UL is in the process of converting its Standards for Safety to the Standard Generalized Markup Language (SGML), and implementing an SGML compliant document management and publishing system. SGML - an international standard (ISO 8879-1986) - is a descriptive markup language that describes a document's structure and purpose, rather than its physical appearance on a page. Significant benefits that will result from UL's use of SGML and these new systems include increased productivity, reduced turnaround times, and data and information consistency, reusability, shareability, and portability. However, the fonts, pagination, and general formatting of UL's new electronic publishing system differ from that of UL's previous publishing system. Consequently, when revision pages are issued for a Standard with the new publishing system, these differences may result in the printing of pages on which no requirements have been changed - these additional pages result from relocation of text due to repagination and reformatting of the Standard with the new publishing system.

The new requirements are substantially in accordance with UL's Bulletin(s) on this subject dated April 3, 2000 and July 31, 2000. The bulletin(s) is now obsolete and may be discarded.

The master for this Standard at UL's Northbrook Office is the official document insofar as it relates to a UL service and the compliance of a product with respect to the requirements for that product and service, or if there are questions regarding the accuracy of this Standard.

UL's Standards for Safety are copyrighted by UL. Neither a printed copy of a Standard, nor the distribution diskette for a Standard-on-Diskette and the file for the Standard on the distribution diskette should be altered in any way. All of UL's Standards and all copyrights, ownerships, and rights regarding those Standards shall remain the sole and exclusive property of UL.

All rights reserved. No part of this publication may be reproduced, stored in a retrieval system, or transmitted in any form by any means, electronic, mechanical photocopying, recording, or otherwise without prior permission of UL.

Revisions of UL Standards for Safety are issued from time to time. A UL Standard for Safety is current only if it incorporates the most recently adopted revisions.

Documents
Document Sharing Hub

Full document details: UL 1741 2001

UL provides this Standard ″as is″ without warranty of any kind, either expressed or implied, including but not limited to, the implied warranties of merchantability or fitness for any purpose.

In no event will UL be liable for any special, incidental, consequential, indirect or similar damages, including loss of profits, lost savings, loss of data, or any other damages arising out of the use of or the inability to use this Standard, even if UL or an authorized UL representative has been advised of the possibility of such damage. In no event shall UL's liability for any damage ever exceed the price paid for this Standard, regardless of the form of the claim.

UL will attempt to answer support requests concerning electronic versions of its Standards. However, this support service is offered on a reasonable efforts basis only, and UL may not be able to resolve every support request. UL supports the electronic versions of its Standards only if they are used under the conditions and operating systems for which it is intended. UL's support policies may change from time-to-time without notification.

UL reserves the right to change the format, presentation, file types and formats, delivery methods and formats, and the like of both its printed and electronic Standards without prior notice.

Purchasers of the electronic versions of UL's Standards for Safety agree to defend, indemnify, and hold UL harmless from and against any loss, expense, liability, damage, claim, or judgement (including reasonable attorney's fees) resulting from any error or deviation introduced while purchaser is storing an electronic Standard on the purchaser's computer system.

If a single-user version electronic Standard was purchased, one copy of this Standard may be stored on the hard disk of a single personal computer, or on a single LAN file-server or the permanent storage device of a multiple-user computer in such a manner that this Standard may only be accessed by one user at a time and for which there is no possibility of multiple concurrent access.

If a multiple-user version electronic Standard was purchased, one copy of the Standard may be stored on a single LAN file-server, or on the permanent storage device of a multiple-user computer, or on an Intranet server. The number of concurrent users shall not exceed the number of users authorized.

Electronic Standards are intended for on-line use, such as for viewing the requirements of a Standard, conducting a word search, and the like. Only one copy of the Standard may be printed from each single-user version of an electronic Standard. Only one copy of the Standard may be printed for each authorized user of a multiple-user version of an electronic Standard. Because of differences in the computer/software/printer setup used by UL and those of electronic Standards purchasers, the printed copy obtained by a purchaser may not look exactly like the on-line screen view or the printed Standard.

An employee of an organization purchasing a UL Standard can make a copy of the page or pages being viewed for their own fair and/or practical internal use.

The requirements in this Standard are now in effect, except for those paragraphs, sections, tables, figures, and/or other elements of the Standard having future effective dates as indicated in the note following the affected item. The prior text for requirements that have been revised and that have a future effective date are located after the Standard, and are preceded by a ″SUPERSEDED REQUIREMENTS″ notice.

New product submittals made prior to a specified future effective date will be judged under all of the requirements in this Standard including those requirements with a specified future effective date, unless the applicant specifically requests that the product be judged under the current requirements. However, if

Documents
Document Sharing Hub
标准分享网 www.bzfxw.com 免费下载
Full document details: UL 1741 2001

the applicant elects this option, it should be noted that compliance with all the requirements in this Standard will be required as a condition of continued Listing and Follow-Up Services after the effective date, and understanding of this should be signified in writing.

Copyright © 2001 Underwriters Laboratories Inc.

This Standard consists of pages dated as shown in the following checklist:

Page	Date
1-18B	January 17, 2001
19	May 7, 1999
20-24	January 17, 2001
25	May 7, 1999
26-30	January 17, 2001
31-32	May 7, 1999
33	January 17, 2001
34-35	May 7, 1999
36	January 17, 2001
37-38	May 7, 1999
39-40B	January 17, 2001
41-42	May 7, 1999
43-44B	January 17, 2001
45-46	May 7, 1999
47-52	January 17, 2001
53	May 7, 1999
54-58B	January 17, 2001
59-63	May 7, 1999
64-66B	January 17, 2001
67-72	May 7, 1999
73-74B	January 17, 2001
75	May 7, 1999
76-80B	January 17, 2001
81	May 7, 1999
82-100D	January 17, 2001
101-102	May 7, 1999
103-104B	January 17, 2001
105-109	May 7, 1999
110-132	January 17, 2001
133-134	May 7, 1999
135-138	January 17, 2001
A1-A2	January 17, 2001

Documents
Document Sharing Hub

Full document details: UL 1741 2001

No Text on This Page

Documents
Document Sharing Hub
标准分享网 www.bzfxw.com 免费下载
Full document details: UL 1741 2001

MAY 7, 1999
(Title Page Reprinted: January 17, 2001)

1

UL 1741

Standard for Inverters, Converters, and Controllers for Use in Independent Power Systems

First Edition

May 7, 1999

An effective date included as a note immediately following certain requirements is one established by Underwriters Laboratories Inc.

Revisions of this Standard will be made by issuing revised or additional pages bearing their date of issue. A UL Standard is current only if it incorporates the most recently adopted revisions, all of which are itemized on the transmittal notice that accompanies the latest set of revised requirements.

ISBN 0-7629-0421-6

COPYRIGHT © 1999, 2001 UNDERWRITERS LABORATORIES INC.

Documents
Document Sharing Hub

Full document details: UL 1741 2001

No Text on This Page

Documents
Document Sharing Hub
标准分享网 www.bzfxw.com 免费下载
Full document details: UL 1741 2001

CONTENTS

FOREWORD 6

INTRODUCTION

1 Scope 7
2 Glossary 7
3 General 12
3.1 Components 12
3.2 Units of measurement 13
3.3 References 13

CONSTRUCTION

4 General 13
5 Frame and Enclosure 13
5.1 General 13
5.2 Access covers 14
5.3 Cast metal enclosures 15
5.4 Sheet metal enclosures 15
5.5 Nonmetallic enclosures 18
5.6 Openings covered by glass 18A
5.7 Openings for wiring system connections 18A
5.8 Openings for ventilation 20
5.9 Environmental rated enclosures 26
6 Protection Against Corrosion 29
7 Mechanical Assembly 29
8 Mounting 30
9 Protection of Users – Accessibility of Uninsulated Live Parts 30
10 Protection of Service Personnel 34
11 Electric Shock 35
11.1 Voltage 35
11.2 Stored energy 37
12 Switches and Controls 40A
13 Disconnect Devices 42
14 AC Output Connections 43
14.1 Stand-alone inverters 43
14.2 Utility-interactive inverters 43
15 Receptacles 44
16 Supply Connections 44
16.1 General 44
16.2 Wiring terminals 44A
16.3 Wiring leads 47
16.4 Wiring compartments 48
16.5 Openings for conduit or cable connection 48
16.6 Openings for class 2 circuit conductors 49
17 Wire-Bending Space 49
18 Equipment Grounding 55
18.1 General 55
18.2 Grounding electrode terminal 57
19 AC Output Circuit Grounded Conductor 58

Documents
Document Sharing Hub

Full document details: UL 1741 2001

20 Internal Bonding for Grounding 59
21 Internal Wiring 61
21.1 General 61
21.2 Protection of wiring 63
21.3 Electrical connections 63
22 Live Parts 64
23 Separation of Circuits 65
23.1 Factory wiring 65
23.2 Field wiring 65
23.3 Separation barriers 66
24 Spacings 66A
24.1 General 66A
24.2 Insulating liners and barriers 69
25 Alternate Spacings – Clearances and Creepage Distances 70
26 Insulating Materials 71
26.1 General 71
26.2 Barriers 72
27 Capacitors 72
28 Isolated Accessible Signal Circuits 73
29 Control Circuits 74
30 Overcurrent Protection 76
30.1 General 76
30.2 Control circuit overcurrent protection 78
30.3 Output ac power circuit overcurrent protection 79
30.4 Battery circuits 80
31 DC Ground Fault Detector/Interrupter 80
32 Printed-Wiring Boards 80B

PROTECTION AGAINST RISKS OF INJURY TO PERSONS

33 General 81
34 Enclosures and Guards 81
35 Moving Parts 82
36 Switches and Controls 82
37 Mounting 82

OUTPUT POWER CHARACTERISTICS AND UTILITY COMPATIBILITY

38 General 82
39 Utility Interaction 83
40 DC Isolation From the Utility 83

PERFORMANCE

41 General 84
42 Maximum-Voltage Measurements 85
43 Temperature 85
44 Dielectric Voltage-Withstand Test 90
44.1 General 90
45 Output Power Characteristics 91
45.1 General 91
45.2 Output ratings 92
45.3 DC input range 92

Documents
Document Sharing Hub
标准分享网 www.bzfxw.com 免费下载
Full document details: UL 1741 2001

45.4 Harmonic distortion 92
45.5 DC injection 93
46 Utility Compatibility 94
46.1 General 94
46.2 Utility voltage and frequency variation test 94
46.3 Anti-Islanding test 95
46.4 Loss of Control Circuit 98
47 Abnormal Tests 98
47.1 General 98
47.2 Output overload test 100
47.3 Short-circuit test 100A
47.4 DC input miswiring test 100A
47.5 Ventilation test 100B
47.6 Component short- and open-circuit 100B
47.7 Load transfer test 100C
48 Grounding Impedance Test 100C
49 Overcurrent Protection Calibration Test 100C
50 Strain Relief Test 100D
51 Reduced Spacings on Printed Wiring Boards Tests 100D
51.1 General 100D
51.2 Dielectric voltage-withstand test 101
51.3 Shorted trace test 101
52 Bonding Conductor Test 101
53 Voltage Surge Test 102
54 Calibration Test 103
55 Overvoltage Test 104
56 Current Withstand Test 104A
57 Capacitor Voltage Determination Test 105
58 Stability 105
59 Static Load 105
60 Compression Test 106
61 Rain and Sprinkler Tests 106
61.1 General 106
61.2 Rain test 106
61.3 Sprinkler test 109

RATING

62 Details 111

MARKING

63 Details 112
64 Cautionary Markings 120
65 Equipment Information and Instructions 120B
65.1 Separation of information 120B
65.2 Operating and installation instructions 121
66 Important Safety Instructions 122

MANUFACTURING AND PRODUCTION TESTS

67 Dielectric Voltage-Withstand Test 126
68 Utility Voltage and Frequency Variation Test 128

Documents
Document Sharing Hub
Full document details: UL 1741 2001

CHARGE CONTROLLERS

INTRODUCTION

69 General 129

CONSTRUCTION

70 General 130

PERFORMANCE

71 General 130A
72 Normal Operations 130B
73 Temperature 131
74 Temperature Compensation 131
75 Connection Sequence 131
76 Abnormal Tests 133
76.1 General 133
76.2 Input and output faults 133
76.3 Charge controller miswiring 133
76.4 Low-voltage disconnect 134

MARKING

77 Cautionary Markings 134
78 Details 135
79 Important Safety Instructions 135

AC MODULES

INTRODUCTION

80 General 136

CONSTRUCTION

81 General 136

PERFORMANCE

82 General 137
83 AC Module Inverter Securement Test 137

RATING

84 General 138

MARKING

85 Details 138
86 Important Safety Instructions 138

Documents
Document Sharing Hub
标准分享网 www.bzfxw.com 免费下载
Full document details: UL 1741 2001

APPENDIX A

Standards for Components A1

Documents
Document Sharing Hub

Full document details: UL 1741 2001

FOREWORD

A. This Standard contains basic requirements for products covered by Underwriters Laboratories Inc. (UL) under its Follow-Up Service for this category within the limitations given below and in the Scope section of this Standard. These requirements are based upon sound engineering principles, research, records of tests and field experience, and an appreciation of the problems of manufacture, installation, and use derived from consultation with and information obtained from manufacturers, users, inspection authorities, and others having specialized experience. They are subject to revision as further experience and investigation may show is necessary or desirable.

B. The observance of the requirements of this Standard by a manufacturer is one of the conditions of the continued coverage of the manufacturer's product.

C. A product which complies with the text of this Standard will not necessarily be judged to comply with the Standard if, when examined and tested, it is found to have other features which impair the level of safety contemplated by these requirements.

D. A product employing materials or having forms of construction which conflict with specific requirements of the Standard cannot be judged to comply with the Standard. A product employing materials or having forms of construction not addressed by this Standard may be examined and tested according to the intent of the requirements and, if found to meet the intent of this Standard, may be judged to comply with the Standard.

E. UL, in performing its functions in accordance with its objectives, does not assume or undertake to discharge any responsibility of the manufacturer or any other party. The opinions and findings of UL represent its professional judgment given with due consideration to the necessary limitations of practical operation and state of the art at the time the Standard is processed. UL shall not be responsible to anyone for the use of or reliance upon this Standard by anyone. UL shall not incur any obligation or liability for damages, including consequential damages, arising out of or in connection with the use, interpretation of, or reliance upon this Standard.

F. Many tests required by the Standards of UL are inherently hazardous and adequate safeguards for personnel and property shall be employed in conducting such tests.

Documents
Document Sharing Hub
标准分享网 www.bzfxw.com 免费下载
Full document details: UL 1741 2001

INTRODUCTION

1 Scope

1.1 These requirements cover inverters, converters, charge controllers, and output controllers intended for use in stand-alone (not grid connected) or utility-interactive (grid-connected) power systems. Utility-interactive inverters and converters are intended to be installed in parallel with an electric supply system or an electric utility to supply common loads.

1.1 revised January 17, 2001

1.2 These requirements cover AC modules that combine flat-plate photovoltaic modules and inverters to provide AC output power for stand-alone use or utility-interaction, and power systems which combine other alternative energy sources with inverters, converters, charge controllers and output controllers, in system specific combinations.

1.2 revised January 17, 2001

1.3 These requirements also cover power systems that combine independent power sources with inverters, converters, charge controllers, and output controllers in system specific combinations.

1.3 revised January 17, 2001

1.4 The products covered by these requirements are intended to be installed in accordance with the National Electrical Code, NFPA 70.

1.4 added January 17, 2001

1.5 A product that contains features, characteristics, components, materials, or systems new or different from those covered by the requirements in this standard, and that involves a risk of fire or of electric shock or injury to persons shall be evaluated using appropriate additional component and end-product requirements to maintain the level of safety as originally anticipated by the intent of this standard. A product whose features, characteristics, components, materials, or systems conflict with specific requirements or provisions of this standard does not comply with this standard. Revision of requirements shall be proposed and adopted in conformance with the methods employed for development, revision, and implementation of this standard.

1.3 revised and relocated as 1.5 January 17, 2001

2 Glossary

2.1 In the text of this standard, the term ″unit″ refers to any product covered by this Standard. For the purpose of this Standard, the definitions in 2.2– 2.43 apply.

2.1 effective November 7, 2000

2.2 AC MODULE – The smallest complete unit that includes solar cells, optics, inverters, and other components, excluding tracking devices, intended to generate ac power from sunlight.

2.2 effective November 7, 2000

2.3 BARRIER – A part inside an enclosure that reduces access to a part that involves a risk of fire, electric shock, injury to persons, or electrical energy-high current levels.

2.3 effective November 7, 2000

2.4 BRANCH CIRCUIT – The portion of the building wiring system beyond the final overcurrent protective device in the power-distribution panel that protects the ac output of the field-wiring terminals in a permanently connected unit.

2.4 effective November 7, 2000

Documents
Document Sharing Hub
Full document details: UL 1741 2001

2.5 BYPASS SOURCE – A branch circuit or generator to which the load is connected when the power conversion portion of the inverter is not supplying power to the load.

2.5 effective November 7, 2000

2.6 CHARGE CONTROLLER – A device intended to control the charging process of storage batteries used in photovoltaic power systems.

2.6 effective November 7, 2000

2.7 CLASS 2 TRANSFORMER – A step-down transformer complying with the applicable requirements in the Standard for Class 2 and Class 3 Transformers, UL 1585.

2.7 effective November 7, 2000

2.8 CONTROL CIRCUIT – A circuit that carries low-voltage, limited-energy (LVLE) electric signals and not main power, voltage or current.

2.8 revised January 17, 2001

2.8A CONVERTER– A device that accepts AC or DC power input and converters it to another form of AC or DC power for direct utilization by a load or accumulation in an energy storage system (batteries, capacitors, etc.).

2.8A added January 17, 2001

2.9 DC GROUND FAULT DETECTOR/INTERRUPTER – A device that provides protection for photovoltaic arrays by detecting a ground fault and interrupting the fault path in the dc circuit.

2.9 effective November 7, 2000

2.10 DEGREE OF PROTECTION – The extent of protection provided by an enclosure against access to parts which involve a risk of injury to persons, ingress of foreign solid objects, and/or ingress of water as verified by standardized test methods.

2.10 effective November 7, 2000

2.11 DISCONNECT DEVICE – A device that disconnects the conductors of a circuit from a supply, source, utility, or load.

2.11 effective November 7, 2000

2.12 ENCLOSURE – A surrounding case constructed to provide a degree of protection against:

a) The accessibility of a part that potentially involves a risk of fire, electric shock or injury to persons, or

b) The risk of propagation of flame, sparks, and molten metal initiated by an electrical disturbance occurring within.

2.12 effective November 7, 2000

2.13 FIELD-WIRING LEAD – A lead to which a supply, load, or other wire is intended to be connected by an installer.

2.13 effective November 7, 2000

2.14 FIELD-WIRING TERMINAL – A terminal to which a supply, load, or other wire is intended to be connected by an installer.

2.14 effective November 7, 2000

Documents
Document Sharing Hub
标准分享网 www.bzfxw.com 免费下载
Full document details: UL 1741 2001

2.15 FIXED UNIT – A unit that is intended to be permanently connected mechanically and electrically and only able to be detached by the use of a tool.

2.15 revised January 17, 2001

2.16 GROUNDED CONDUCTOR – A system or circuit conductor that is intentionally grounded.

2.16 effective November 7, 2000

2.17 GUARD – A part outside of the enclosure that reduces access to a component involving a risk of injury to persons. See Enclosures and Guards, Section 34.

2.17 effective November 7, 2000

2.18 INVERTER – An electronic device that changes dc power to ac power.

2.18 effective November 7, 2000

2.19 ISLANDING PROTECTION – Protection against the continuous operation of the inverter and part of the utility load while isolated from the remainder of the electric utility system.

2.19 effective November 7, 2000

2.20 ISOLATED CIRCUIT – A circuit having an isolation transformer or isolating components such as optically or magnetically coupled devices.

2.20 effective November 7, 2000

2.21 ISOLATION TRANSFORMER – A transformer having its primary winding electrically isolated from its secondary winding and constructed so that there is no electrical connection – under normal and overload conditions – between the primary and secondary windings, between the primary winding and the core, or between separate adjacent secondary windings, where such connection results in a risk of fire or electric shock.

2.21 effective November 7, 2000

2.22 KNOCKOUT – A portion of the wall of an enclosure so fashioned that it is capable of being readily removed by a hammer, screwdriver, and pliers at the time of installation in order to provide an opening or hole for the attachment of an auxiliary device, raceway, cable, or fitting.

2.22 effective November 7, 2000

2.23 LIMITED-ENERGY (LE) CIRCUIT – An ac or dc circuit having a voltage not exceeding 1000 volts and the energy limited to 100 volt-amperes by:

a) The secondary winding of a transformer,

b) One or more resistors complying with 29.10, or

c) A regulating network complying with 29.11.

2.23 effective November 7, 2000

2.24 LIVE PART – An electrically conductive part within a unit that during intended use has a potential difference with respect to earth ground.

2.24 effective November 7, 2000

2.25 LOW-VOLTAGE, LIMITED-ENERGY (LVLE) CIRCUIT – A circuit involving an ac voltage of not more than 30 volts rms (42.4 volts peak) or a dc voltage of not more than 60 volts and supplied by:

Documents
Document Sharing Hub

Full document details: UL 1741 2001

a) An inherently limited Class 2 transformer or a not inherently limited Class 2 transformer and an overcurrent protective device that is:

1) Not of the automatic reclosing type,

2) Trip-free from the reclosing mechanism, and

3) Not readily interchangeable with a device of a different rating or the device is marked in accordance with 64.7.

b) A combination of an isolated transformer secondary winding and one or more resistors or a regulating network complying with 29.11 that complies with all the performance requirements for an inherently limited Class 2 transformer or power source; or

c) A battery that is isolated from the primary circuit or a combination of a battery, including the battery charging circuit of a unit that is isolated from the primary circuit, and one or more resistors or a regulating network complying with 29.11.

2.25 revised January 17, 2001

2.26 MAXIMUM SYSTEM VOLTAGE – The open-circuit voltage (Voc) of the photovoltaic module or panel multiplied by the temperature correction factor specified in Article 690-7 of the National Electrical Code, ANSI/NFPA 70 for crystalline and multi-crystalline silicon photovoltaic modules and panels. The maximum system voltage is equal to the Voc for amorphous silicate and thin film photovoltaic modules and panels.

2.26 revised January 17, 2001

2.27 OPEN-CIRCUIT VOLTAGE (Voc) – The maximum no load output voltage of a photovoltaic module or panel at standard test conditions (STC). See 2.39.

2.27 effective November 7, 2000

2.27A OUTPUT CONTROLLER– A device external to an inverter or converter that performs utility-interface functions, such as over and under-voltage, over and under-frequency, and anti-islanding protection.

2.27A added January 17, 2001

2.28 PERMANENTLY CONNECTED UNIT – A unit connected to the electrical supply by means other than a supply cord and an attachment plug.

2.28 effective November 7, 2000

2.29 PRESSURE TERMINAL CONNECTOR – A terminal that accomplishes the connection of one or more conductors by means of pressure without the use of solder. Examples of pressure terminal connectors are:

a) Barrel and setscrew type,

b) Crimp-type barrel, or

c) Clamping plate and screw type.

2.29 effective November 7, 2000

2.30 PRIMARY CIRCUIT – Wiring and components that are conductively connected to a branch circuit.

2.30 effective November 7, 2000

Documents
Document Sharing Hub
标准分享网 www.bzfxw.com 免费下载
Full document details: UL 1741 2001

2.31 PULSE-WIDTH MODULATED (PWM) CHARGING – A charge control method that enables the photovoltaic current to bring the battery voltage to constant voltage type regulation using pulse width modulated control by setting the voltage regulation reconnect (V_{rr}) setpoint photovoltaic array closer to the disconnect (V_r) using pulse-width-modulated control circuitry. Based on the rate of switching, the overall current is able to taper similar to the constant voltage type regulation.

2.31 effective November 7, 2000

2.32 RISK OF ELECTRICAL ENERGY- HIGH CURRENT LEVEL – The capability for damage to property or injury to persons, other than by electric shock, from available electrical energy existing between a live part and an adjacent dead metal part or between live parts of different polarity, where there is a potential of 2 volts or more and:

a) An available continuous power level of 240 volt-amperes or more, or

b) A reactive energy level of 20 joules or more.

For example, a tool, or other metal, short-circuiting a component that is able to result in a burn or a fire when enough energy is available at the component to vaporize, melt, or more than warm the metal.

2.32 effective November 7, 2000

2.33 SAFETY CIRCUIT – Any primary or secondary circuit that is used to reduce the risk of fire, electric shock, injury to persons, or electrical energy - high current levels. A safety interlock circuit, for example, is a safety circuit.

2.33 revised January 17, 2001

2.34 SAFETY INTERLOCK – A means relied upon to reduce the accessibility to an area that involves a risk of electric shock, electrical energy - high current levels, or injury to persons until the risk has been removed, or to automatically remove the risk when access is gained.

2.34 effective November 7, 2000

2.35 SECONDARY CIRCUIT – A circuit supplied from a secondary winding of an isolation transformer.

2.35 effective November 7, 2000

2.36 SERIES CHARGE CONTROLLER – A control element for battery charging that is in series with a photovoltaic array and a battery. The control element usually operates in an on/off mode, a pulse-width modulated (PWM) mode, or a linear control mode. The control element is usually a solid state switching device or a mechanical relay.

2.36 effective November 7, 2000

2.37 SERVICE PERSONNEL – Trained persons having familiarity with the construction and operation of the equipment and the risks involved.

2.37 effective November 7, 2000

2.38 STAND-ALONE INVERTER – An inverter intended to supply a load and does not provide power back to the electric utility.

2.38 effective November 7, 2000

2.39 STANDARD TEST CONDITIONS (STC) – Test conditions consisting of:

a) 100 mW/cm^2 irradiance,

b) AM 1.5 spectrum, and

Documents
Document Sharing Hub
Full document details: UL 1741 2001

c) 25°C (77°F) cell temperature.

2.39 effective November 7, 2000

2.40 TOOL – A screwdriver, coin, key, or any other object that is usable to operate a screw, latch, or similar fastening means.

2.40 effective November 7, 2000

2.40A TOTAL HARMONIC DISTORTION (THD)– The ratio of the root-mean-square (rms) of the harmonic content to the root-mean-square value of the fundamental quantity, expressed as a percentage.

THD = [(sum of squares of amplitudes of all harmonics)/(square of amplitude of fundamental)]$^{1/2}$X 100

2.40A added January 17, 2001

2.41 UTILITY-INTERACTIVE INVERTER – An inverter intended for use in parallel with an electric utility to supply common loads and sometimes deliver power to the utility.

2.41 effective November 7, 2000

2.42 VOLTAGE REGULATION (V_r) SETPOINT – The maximum battery voltage that a charge controller enables the battery to reach under charging conditioners. At this voltage the charge controller discontinues charging or begins to minimize the charging current to the battery.

2.42 effective November 7, 2000

2.43 VOLTAGE REGULATION RECONNECT (V_{rr}) SETPOINT – The battery voltage at which the charge controller reconnects the array to the battery when it has been disconnected at the V_r setpoint.

2.43 effective November 7, 2000

3 General

3.1 Components

3.1.1 Except as indicated in 3.1.2, a component of a product covered by this standard shall comply with the requirements for that component. See Appendix A for a list of standards covering components commonly used in the products covered by this Standard.

3.1.1 effective November 7, 2000

3.1.2 A component is not required to comply with a specific requirement that:

a) Involves a feature or characteristic not required in the application of the component in the product covered by this standard, or

b) Is superseded by a requirement in this standard.

3.1.2 revised January 17, 2001

3.1.3 A component shall be used in accordance with its rating established for the intended conditions of use.

3.1.3 revised January 17, 2001

Documents
Document Sharing Hub
标准分享网 www.bzfxw.com 免费下载
Full document details: UL 1741 2001

3.1.4 Specific components are incomplete in construction features or restricted in performance capabilities. Such components are intended for use only under limited conditions, such as certain temperatures not exceeding specified limits, and shall be used only under those specific conditions.

3.1.4 revised January 17, 2001

3.2 Units of measurement

3.2.1 Values stated without parentheses are the requirement. Values in parentheses are explanatory or approximate information.

3.2.1 revised January 17, 2001

3.3 References

3.3.1 Any undated reference to a code or standard appearing in the requirements of this standard shall be interpreted as referring to the latest edition of that code or standard.

3.3.1 revised January 17, 2001

CONSTRUCTION

4 General

Section 4 effective November 7, 2000

4.1 A unit intended to operate at rated voltages of 50 volts or less shall operate as intended in both grounded and ungrounded circuits.

5 Frame and Enclosure

5.1 General

Section 5.1 effective November 7, 2000

5.1.1 A unit shall be provided with an enclosure that houses all current-carrying parts. The enclosure shall protect the various parts of the unit against mechanical damage from forces external to the unit. The parts of the enclosure that are required to be in place to comply with the requirements to reduce the risk of fire, electric shock, injury to persons shall comply with the applicable enclosure requirements specified in this Standard.

5.1.2 The frame or chassis of a unit shall not be relied upon to carry current during normal operation.

Exception: As provided in the Exception to 20.12.

5.1.3 A part, such as a dial or nameplate that is a part of the enclosure shall comply with the enclosure requirements.

5.1.4 An enclosure other than a Type 1 (indoor use only) shall comply with Environmental Rated Enclosures, Section 5.9, or the requirements for the respective Type in the Standard for Enclosures for Electrical Equipment, UL 50.

Documents
Document Sharing Hub
Full document details: UL 1741 2001

5.1.5 Sheet-metal screws threading directly into metal shall not be used to attach a cover, door, or other part that is to be removed to install field wiring or for operation of the equipment. Sheet-metal screws that are threaded into sheet-metal nuts that are permanently mounted and protected against corrosion. Machine screws and self-tapping machine screws are able to thread directly into sheet-metal walls.

5.1.6 Sheet-metal screws mounting internal components that are not removed for installation or operation are able to thread directly into metal.

5.2 Access covers

Section 5.2 effective November 7, 2000

5.2.1 For a unit used as a load center, a cover that gives access to a fuse or other overload-protective device, the functioning of which requires renewal shall be hinged. A hinged cover is also required for a unit when it is required to open the cover in connection with normal operation of the unit. The cover shall not depend solely upon screws or other similar means requiring the use of a tool to hold it closed; however, it shall be provided with a spring latch or catch, or a hand operable captive fastener. Live parts shall not be accessible when the cover is open.

Exception No. 1: A cover is not required to be provided with a hinge when the only overload-protective devices enclosed are:

a) Supplementary types in control circuits and the protective device and the circuit loads are within the same enclosure,

b) Supplementary types rated 2 amperes or less for loads not exceeding 100 volt-amperes,

c) Extractor fuses having an integral enclosure, or

d) Protective devices connected in a low-voltage, limited-energy (LVLE) circuit.

Exception No. 2: A cover is not required to be provided with a hinge for an enclosure that contains no user-serviceable or -operable parts and which is provided with a marking in accordance with 64.6.

5.2.2 With reference to 5.2.1, a door or cover giving access to a fuse shall comply with the requirements for doors and covers, in the Standard for Industrial Control Equipment, UL 508.

Documents
Document Sharing Hub
标准分享网 www.bzfxw.com 免费下载
Full document details: UL 1741 2001

5.3 Cast metal enclosures

Section 5.3 effective November 7, 2000

5.3.1 The thickness of cast metal for an enclosure shall not be less than indicated in Table 5.1.

Exception: Cast metal of lesser thickness is usable where the enclosure complies with Compression Test, Section 60.

Table 5.1
Thickness of cast-metal enclosures

Use, or dimension of area involved	Minimum thickness, mm (inch)			
	Die-cast metal		Cast metal other than die-cast type	
Area of 154.8 cm^2(24 in^2) or less and having no dimension greater than 152 mm (6 inches)	1.6[a]	(1/16)	3.2	(1/8)
Area greater than 154.8 cm^2(24 in^2) or having any dimension greater than 152 mm (6 inches)	2.4	(3/32)	3.2	(1/8)
At a threaded conduit hole	6.4	(1/4)	6.4	(1/4)
At an unthreaded conduit hole	3.2	(1/8)	3.2	(1/8)

[a] The area limitations for metal 1.6 mm (1/16 inch) thick are attainable by the provision of reinforcing ribs subdividing a larger area.

5.4 Sheet metal enclosures

5.4.1 The thickness of a sheet-metal enclosure shall not be less than that specified in Tables 5.2 and 5.3; however, uncoated steel shall not be less than 0.81 mm (0.032 inch) thick, zinc-coated steel shall not be less than 0.86 mm (0.034 inch) thick, and nonferrous metal shall not be less than 1.14 mm (0.045 inch) thick at points at which a wiring system is to be connected.

Exception: Sheet metal of lesser thickness is usable where the enclosure complies with Compression Test, Section 60.

5.4.1 effective November 7, 2000

5.4.2 *Deleted January 17, 2001*

5.4.3 With reference to Tables 5.2 and 5.3, a supporting frame is a structure consisting of angles, channels, or folded rigid sections of sheet metal that is rigidly attached to and has similar outside dimensions as the enclosure surface and that has the torsional rigidity to resist the bending moments that result when the enclosure surface is deflected. A construction that has equivalent reinforcing is one that is as rigid as one built with a frame of angles or channels.

5.4.3 effective November 7, 2000

Documents
Document Sharing Hub
Full document details: UL 1741 2001

Table 5.2
Thickness of sheet metal for enclosures, carbon steel or stainless steel

Table 5.2 effective November 7, 2000

Without supporting frame[a]				With supporting frame or equivalent reinforcing[a]				Minimum thickness, mm (inch)			
Maximum width,[b]		Maximum length,[c]		Maximum width,[b]		Maximum length,[c]					
cm	(inch)	cm	(inch)	cm	(inch)	cm	(inch)	Uncoated		Coated	
10.2	(4.0)	Not limited		15.9	(6.25)	Not limited		0.51[d]	(0.020)	0.58[d]	(0.023)
12.1	(4.75)	14.6	(5.75)	17.1	(6.75)	21.0	(8.25)				
15.2	(6.0)	Not limited		24.1	(9.5)	Not limited		0.66[d]	(0.026)	0.74[d]	(0.029)
17.8	(7.0)	22.2	(8.75)	25.4	(10.0)	31.8	(12.5				
20.3	(8.0)	Not limited		30.5	(12.0)	Not limited		0.81	(0.032)	0.86	(0.034)
22.9	(9.0)	29.2	(11.5)	33.0	(13.0)	40.6	(16.0)				
31.8	(12.5	Not limited		49.5	(19.5)	Not limited		1.07	(0.042)	1.14	(0.045)
35.6	(14.0	45.7	(18.0)	53.3	(21.0)	63.5	(25.0)				
45.7	(18.0)	Not limited		68.6	(27.0)	Not limited		1.35	(0.053)	1.42	(0.056)
50.8	(20.0)	63.5	(25.0)	73.7	(29.0)	91.4	(36.0)				
55.9	(22.0)	Not limited		83.8	(33.0)	Not limited		1.52	(0.060)	1.60	(0.063)
63.5	(25.0)	78.7	(31.0)	88.9	(35.0)	109.2	(43.0)				
63.5	(25.0)	Not limited		99.1	(39.0)	Not limited		1.70	(0.067)	1.78	(0.070)
73.7	(29.0)	91.4	(36.0)	104.1	(41.0)	129.5	(51.0)				
83.8	(33.0)	Not limited		129.5	(51.0)	Not limited		2.03	(0.080)	2.13	(0.084)
103.4	(38.00	119.4	(47.0)	137.2	(54.0)	167.6	(66.0)				
106.7	(42.0)	Not limited		162.6	(64.0)	Not limited		2.36	(0.093)	2.46	(0.097)
119.4	(47.0)	149.9	(59.0)	172.7	(68.0)	213.4	(84.0)				
132.1	(52.0)	Not limited		203.2	(80.0)	Not limited		2.74	(0.108)	2.82	(0.111)
152.4	(60.0)	188.0	(74.0)	213.4	(84.0)	261.6	(103.0)				
160.0	(63.0)	Not limited		246.4	(97.0)	Not limited		3.12	(0.123)	3.20	(0.126)
185.4	(73.0)	228.6	(90.0)	261.6	(103.0)	322.6	(127.0)				

[a] See 5.4.3 and 5.4.4.

[b] The width is the smaller dimension of a rectangular sheet metal piece that is part of an enclosure. In some cases, adjacent surfaces of an enclosure have supports in common and are made of a single sheet.

[c] "Not limited" applies only where the edge of the surface is flanged at least 12.7 mm (1/2 inch) or fastened to adjacent surfaces not normally removed in use.

[d] Sheet steel for an enclosure intended for outdoor use shall not be less than 0.86 mm (0.034 inch) thick for coated metal and not less than 0.81 mm (0.032 inch) thick for uncoated metal.

Documents
Document Sharing Hub
标准分享网 www.bzfxw.com 免费下载
Full document details: UL 1741 2001

Table 5.3
Thickness of sheet metal for enclosures, aluminum, copper, or brass

Table 5.3 effective November 7, 2000

Without supporting frame[a]				With supporting frame or equivalent Reinforcing[a]					
Maximum width[b], cm	(inch)	Maximum length[c], cm	(inch)	Maximum width[b], cm	(inch)	Maximum length[c], cm	(inch)	Minimum thickness, mm	(inch)
7.6	(3.0)	Not limited		17.8	(7.0)	Not limited		0.58[d]	(0.023)
8.9	(3.5)	10.2	(4.0)	21.6	(8.5)	24.1	(9.5)		
10.2	(4.0)	Not limited		25.4	(10.0)	Not limited		0.74	(0.029)
12.7	(5.0)	15.2	(6.0)	26.7	(10.5)	34.3	(13.5)		
15.2	(6.0)	Not limited		35.6	(14.0)	Not limited		0.91	(0.036)
16.5	(6.5)	20.3	(8.0)	38.1	(15.0)	45.7	(18.0)		
20.3	(8.0)	Not limited		48.3	(19.0)	Not limited		1.14	(0.045)
24.1	(9.5)	29.2	(11.5)	53.3	(21.0)	63.5	(25.0)		
30.5	(12.0)	Not limited		71.1	(28.0)	Not limited		1.47	(0.058)
35.6	(14.0)	40.6	(16.0)	76.2	(30.0)	94.0	(37.0)		
45.7	(18.0)	Not limited		106.7	(42.0)	Not limited		1.91	(0.075)
50.8	(20.0)	63.5	(25.0)	114.3	(45.0)	139.7	(55.0)		
63.5	(25.0)	Not limited		152.4	(60.0)	Not limited		2.41	(0.095)
73.7	(29.0)	91.4	(36.0)	162.6	(64.0)	198.1	(78.0)		
94.0	(37.0)	Not limited		221.0	(87.0)	Not limited		3.10	(0.122)
106.7	(42.0)	134.6	(53.0)	236.2	(93.0)	289.6	(114.0)		
132.1	(52.0)	Not limited		312.4	(123.0)	Not limited		3.89	(0.152)
152.4	(60.0)	188.0	(74.0)	330.2	(130.0)	406.4	(160.0)		

[a] See 5.4.3 and 5.4.4.

[b] The width is the smaller dimension of a rectangular sheet metal piece that is part of an enclosure. In some cases, adjacent surfaces of an enclosure have supports in common and are made of a single sheet.

[c] "Not limited" applies only where the edge of the surface is flanged at least 12.7 mm (1/2 inch) or fastened to adjacent surfaces not normally removed in use.

[d] Sheet copper, brass, or aluminum for an enclosure intended for outdoor use shall not be less than 0.74 mm (0.029 inch) thick.

5.4.4 With reference to 5.4.3 and Tables 5.2 and 5.3, a construction does not have a supporting frame when it is:

a) An enclosure formed or fabricated from sheet metal,

b) A single sheet with single formed flanges or formed edges,

c) A single sheet that is corrugated or ribbed, or

d) An enclosure surface loosely attached to a frame, for example, by spring clips.

5.4.4 effective November 7, 2000

Documents
Document Sharing Hub
Full document details: UL 1741 2001

5.5 Nonmetallic enclosures

5.5.1 A polymeric enclosure or polymeric part of an enclosure shall comply with the requirements in the Standard for Polymeric Materials – Use in Electrical Equipment Evaluations, UL 746C. See 5.5.3.

Exception: A polymeric enclosure which complies with the Standard for Enclosures for Electrical Equipment, UL 50, is not required to be investigated for compliance with UL 746C.

5.5.1 effective November 7, 2000

5.5.2 Where an electrical instrument, such as a meter, forms part of the enclosure, the face or the back of the instrument housing, or both together, shall comply with the requirements for an enclosure.

Exception: A meter complying with the Standard for Electrical Analog Instruments – Panelboard Type, UL 1437, complies with this requirement.

5.5.2 effective November 7, 2000

5.5.3 The requirement in 5.5.1 does not apply to a nonmetallic part that forms part of the enclosure under any one of the following conditions:

a) The part covers an opening that has no dimension greater than 25.4 mm (1 inch) and the part is made of a material Classed as V-0, V-1, V-2, or HB, in accordance with the Standard for Tests for Flammability of Plastic Materials for Parts in Devices and Appliances, UL 94,

b) The part is made of a material Classed V-0, V-1, V-2, or HB and covers an opening which does not give access to the user, when the part is removed, to live parts involving a risk of fire, electric shock, or electric energy - high current levels or moving parts.

c) The part covers an opening that has no dimension greater than 101.6 mm (4 inches) and the part is made of a material Classed as V-0, V-1, V-2, or HB, and there is no source of a risk of fire closer than 4 inches from the surface of the enclosure, or

d) The part is made of a material Classed V-0, V-1, V-2, or HB and there is a barrier or a device that forms a barrier made of a material Classed V-0 between the part and a source of a risk of fire.

Exception: A part of a component is not required to be Classed V-0, V-1, V-2, or HB when it complies with the flammability requirements applicable to the component. See Components, Section 3.1.

5.5.3 revised January 17, 2001

5.5.4 A nonmetallic enclosure intended for connection to a rigid conduit system shall comply with the Polymeric Enclosure Rigid Metallic Conduit Connection Tests in the Standard for Enclosures for Electrical Equipment, UL 50.

5.5.4 effective November 7, 2000

Documents
Document Sharing Hub
标准分享网 www.bzfxw.com 免费下载
Full document details: UL 1741 2001

5.6 Openings covered by glass

Section 5.6 effective November 7, 2000

5.6.1 Glass covering an opening shall comply with 5.6.2, shall be secured in place so that it is not readily displaced in service, and shall provide mechanical protection for the enclosed parts.

5.6.2 Glass for an opening:

a) Not more than 102 mm (4 inches) in any dimension shall not be less than 1.6 mm (1/16 inch) thick,

b) Glass for an opening other than described in (a) and not more than 929 cm^2(144 square inches) in area and having no dimension greater than 305 mm (12 inches), shall not be less than 3.2 mm (1/8 inch) thick, and

c) Glass used to cover an area greater than described in (b) shall not be less than 3.2 mm thick and:

1) Shall be of a nonshattering or tempered type that, when broken, complies with the Performance Specifications and Methods of Test for Safety Glazing Material Used in Buildings, ANSI Z97.1-1984 (R1994), or

2) Shall withstand a 3.38 joules (2-1/2 ft-lbf) impact from a 50.8-mm (2-inch) diameter, 535 gram (1.18 pound) steel sphere without cracking or breaking to the extent that a piece is dislodged from its normal position.

5.7 Openings for wiring system connections

Section 5.7 effective November 7, 2000

5.7.1 Where threads for the connection of conduit are tapped all the way through a hole in an enclosure wall, or where an equivalent construction is employed, there shall not be less than three, or more than five threads in the metal; and the construction of the enclosure shall be such that a conduit bushing is attachable as intended. Where threads for the connection of conduit are not tapped all the way through a hole in an enclosure wall, conduit hub, or a similar component; there shall not be less than 3-1/2 threads in the metal, and there shall be a smooth, rounded inlet hole for the conductors equivalent to that provided by a standard conduit bushing and the hole shall have an internal diameter that corresponds with the applicable trade size of rigid conduit.

5.7.2 Clamps and fasteners for the attachment of conduit, electrical metallic tubing, armored cable, nonmetallic flexible tubing, nonmetallic-sheathed cable, service cable, or equivalent, that are supplied as a part of an enclosure shall comply with the Standard for Fittings for Conduit and Outlet Boxes, UL 514B.

5.7.3 A knockout in a sheet-metal enclosure shall be secured and shall be removable without undue deformation of the enclosure.

5.7.4 A knockout shall be provided with a flat surrounding surface so a conduit bushing of the corresponding size seats as intended. A knockout intended to be used for installation purposes, shall be located so that installation of a bushing does not result in spacings between uninsulated live parts and the bushing of less than required in Spacings, Section 24.

Documents
Document Sharing Hub
Full document details: UL 1741 2001

5.7.5 In measuring a spacing between an uninsulated live part and a bushing installed in a knockout as specified in 5.7.4, it is to be assumed that a bushing having the dimensions specified in Table 5.4 is in place, in conjunction with a single locknut installed on the outside of the enclosure.

Documents
Document Sharing Hub
标准分享网 www.bzfxw.com 免费下载
Full document details: UL 1741 2001

Table 5.4
Knockout or hole sizes and dimensions of bushings

Trade size of conduit,	Knockout or hole diameter		Bushing dimensions			
			Overall diameter		Height	
Inch	mm	(inch)	mm	(inch)	mm	(inch)
1/2	22.2	(7/8)	25.4	(1)	9.5	(3/8)
3/4	27.8	(1-3/32)	31.4	(1-15/64)	10.7	(27/64)
1	34.5	(1-23/64)	40.5	(1-19/32)	13.1	(33/64)
1-1/4	43.7	(1-23/32)	49.2	(1-15/16)	14.3	(9/16)
1-1/2	50.0	(1-31/32)	56.0	(2-13/64)	15.1	(19/32)
2	62.7	(2-15/32)	68.7	(2-45/64)	15.9	(5/8)
2-1/2	76.2	(3)	81.8	(3-7/32)	19.1	(3/4)
3	92.1	(3-5/8)	98.4	(3-7/8)	20.6	(13/16)
3-1/2	104.8	(4-1/8)	112.7	(4-7/16)	23.8	(15/16)
4	117.5	(4-5/8)	126.2	(4-31/32)	25.4	(1)
4-1/2	130.2	(5-1/8)	140.9	(5-35/64)	27.0	(1-1/16)
5	142.9	(5-5/8)	158.0	(6-7/32)	30.2	(1-3/16)
6	171.5	(6-3/4)	183.4	(7-7/32)	31.8	(1-1/4)

5.7.6 For an enclosure not provided from the factory with conduit openings or knockouts, spacings not less than the minimum required in this Standard shall be provided between uninsulated live parts and a conduit bushing installed at any location on the enclosure. Permanent marking on the enclosure, a template, or a full-scale drawing furnished with the unit is usable to limit such a location.

5.7.7 A plate or plug for an unused conduit opening or other hole in the enclosure shall have a thickness not less than:

a) 0.36 mm (0.014 inch) for steel or 0.48 mm (0.019 inch) for nonferrous metal for a hole having a 6.4-mm (1/4-inch) maximum dimension, and

b) 0.69-mm (0.027-inch) steel or 0.81-mm (0.032-inch) nonferrous metal for a hole having a 34.9-mm (1-3/8-inch) maximum dimension.

A closure for a larger hole shall have a thickness equal to that required for the enclosure of the unit or a standard knockout seal shall be used. Such plates or plugs shall be securely mounted.

5.7.8 An opening in an environmental rated enclosure shall be closed with components having the applicable environmental ratings as specified in Table 5.5.

Documents
Document Sharing Hub
Full document details: UL 1741 2001

Table 5.5
Openings in environmental rated enclosures

Enclosure Type	Openings shall be closed by components rated for enclosure types
2	2, 3, 3R, 3S, 4, 4X, 6, 6P, 12, 12K, 13
3	3S, 4, 4X, 6, 6P
3R	3, 3S, 4, 4X, 6, 6P
3S	3, 4, 4X, 6, 6P
4	4, 4X, 6, 6P
4X	4X
6	6, 6P
6P	6P
12, 12K	12, 12K, 13
13	13

5.8 Openings for ventilation

Section 5.8 effective November 7, 2000

5.8.1 General

5.8.1.1 The enclosure of a unit shall be constructed to protect the unit against the emission of flame, molten metal, flaming or glowing particles, or flaming drops from the enclosure.

5.8.2 Ventilation openings in enclosure bottoms

5.8.2.1 The requirement in 5.8.1.1 necessitates a complete noncombustible bottom or a construction employing individual noncombustible barriers as specified in Figure 5.1, under components, groups of components, or assemblies.

Exception No. 1: Ventilation openings provided in the bottom of an enclosure meet the intent of the requirement where noncombustible baffle plates are provided to obstruct or deflect materials from falling directly from the interior of the unit onto the supporting surface or other locations under the unit. An example of a baffle that meets the intent of this requirement is illustrated in Figure 5.2.

Exception No. 2: Ventilation openings provided in the bottom of an enclosure meet the intent of the requirement where the openings are covered by a perforated metal plate as described in Table 5.6, or where a galvanized or stainless steel screen having a 14- by 14-mesh per 25.4 mm (1 inch) constructed of wire with a diameter of 0.5 mm (0.018 inch) minimum is used.

Exception No. 3: The bottom of the enclosure under areas containing only materials Classed V-1 or better in accordance with the Standard for Tests for Flammability of Plastic Materials for Parts in Devices and Appliances, UL 94, are able to have openings no larger than 6.4 mm (1/4 inch) square. Openings that are not square shall not have an area greater than 40 mm^2(1/16 square inch).

Exception No. 4: Ventilation openings without limitation on their size and number that comply with 9.7 meet the intent of the requirement where the openings are only in the bottom panel in areas:

a) That contain only wires, cables, plugs, receptacles, and transformers, and

b) In areas that contain low-voltage, limited-energy (LVLE) circuits.

Documents
Document Sharing Hub
标准分享网 www.bzfxw.com 免费下载
Full document details: UL 1741 2001

Exception No. 5: Ventilation openings are provided in the bottom of an enclosure meet the intent of the requirement where the openings incorporate an expanded metal mesh as described in 5.8.5.

Documents
Document Sharing Hub

Full document details: UL 1741 2001

Figure 5.1
Baffle plates

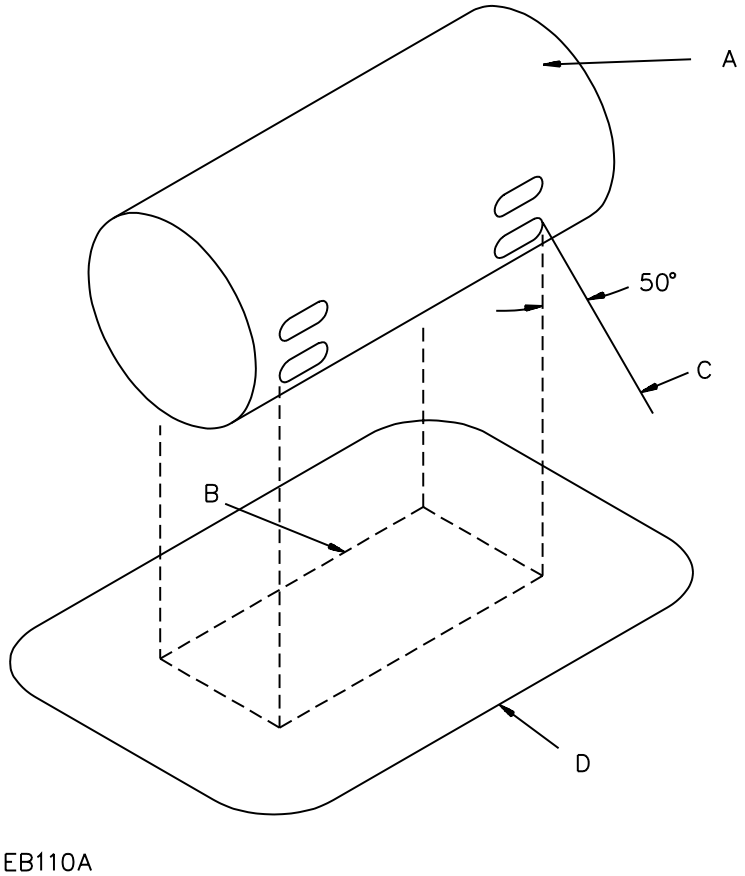

NOTES –

A. The entire component under which a barrier (flat or dished with or without a lip or other raised edge) of noncombustible material is to be provided. The sketch (Figure 5.1) is of an enclosed component with ventilation openings showing that the protective barrier is required only for those openings through which flaming parts are able to be emitted. When the component or assembly does not have its own noncombustible enclosure, the area to be protected is the entire area occupied by the component or assembly.

B. Projection of the outline of the area of A that requires a bottom barrier vertically downward onto the horizontal plane of the lowest point on the outer edge D of the barrier.

C. Inclined line that traces out an area D on the horizontal plane of the barrier. Moving around the perimeter of the area B that requires a bottom barrier, this line projects at a 50-degree angle from the line extending vertically at every point around the perimeter of A and is oriented to trace out the largest area; however, an angle less than 50 degrees complies where the barrier or portion of the bottom cover contacts a vertical barrier or side panel of noncombustible material, or where the horizontal extension of the barrier B to D exceeds 152 mm (6 inches).

D. Minimum outline of the barrier; however, the extension B to D is not required to exceed 152 mm (6 inches) (flat or dished with or without a lip or other raised edge). The bottom of the barrier is able to be flat or formed in any manner where every point of area D is at or below the lowest point on the outer edge of the barrier.

Documents
Document Sharing Hub
标准分享网 www.bzfxw.com 免费下载
Full document details: UL 1741 2001

Table 5.6
Perforated metal plates for enclosure bottom

Minimum thickness, mm	(inch)	Maximum diameter of holes, mm	(inch)	Minimum spacings of holes center to center, mm	(inch)
0.66	(0.026)	1.14	(0.045)	1.70	(0.067), or
				233 holes per 645 mm^2(1 $inch^2$)	
0.66	(0.026)	1.19	(0.047)	2.36	(0.093)
0.76	(0.030)	1.14	(0.045)	1.70	(0.067)
0.76	(0.030)	1.19	(0.047)	2.36	(0.093)
0.81	(0.032)	1.91	(0.075)	3.18	(0.125), or
				72 holes per 645 mm^2(1 $inch^2$)	
0.89	(0.035)	1.90	(0.075)	3.18	(0.125)
0.91	(0.036)	1.60	(0.063)	2.77	(0.109)
0.91	(0.036)	1.98	(0.078)	3.18	(0.125)
0.99	(0.039)	1.60	(0.063)	2.77	(0.109)
0.99	(0.039)	2.00	(0.079)	3.00	(0.118)

Figure 5.2
Example of baffle overlap

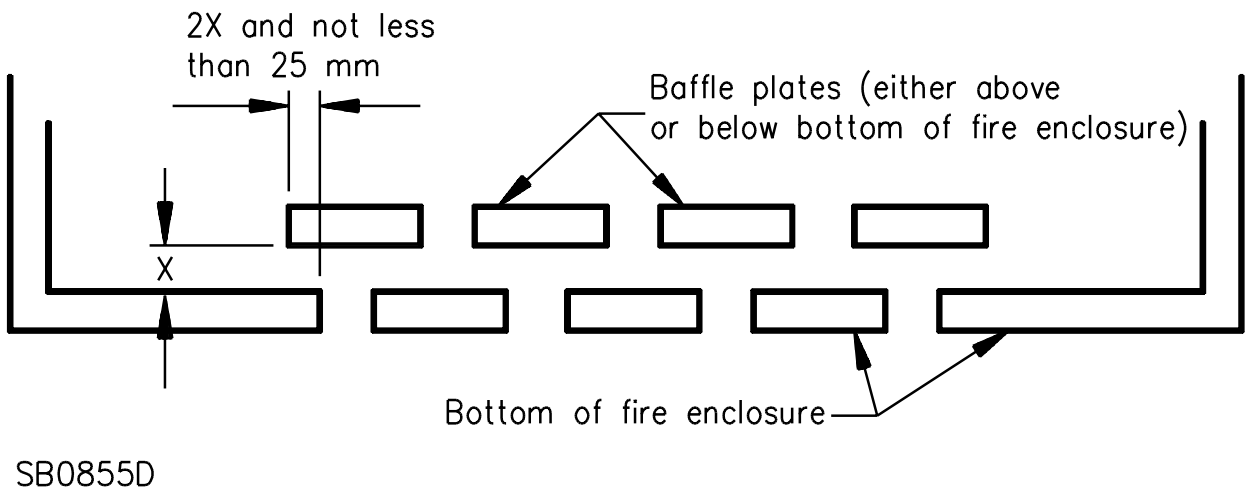

5.8.3 Openings in enclosure tops

5.8.3.1 Openings in the top of an enclosure shall be located and sized to protect against the entry of foreign objects. Openings directly over uninsulated live parts:

a) Shall not exceed 4.7 mm (0.187 inch) in any dimension,

Documents
Document Sharing Hub
Full document details: UL 1741 2001

b) Be configured as illustrated in Figure 5.3, or

c) Be constructed to provide equivalent protection against the entry of foreign objects.

Figure 5.3
Cross sections of top-cover design

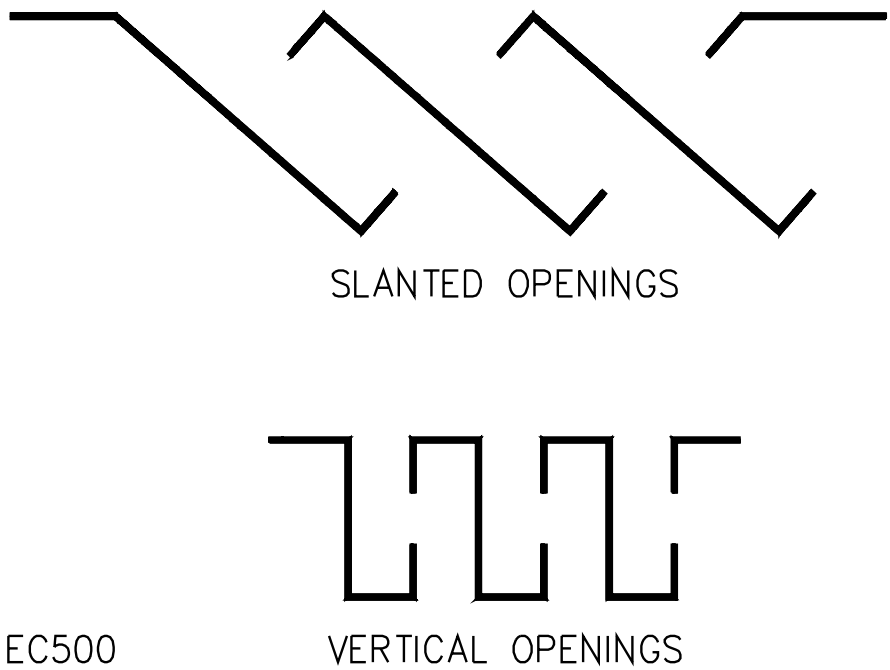

5.8.4 Openings in enclosure sides

5.8.4.1 A louver shall not be more than 305 mm (12 inches) long.

5.8.4.2 The area of an opening covered by louvers, perforated sheet steel, or by expanded-metal mesh that is thinner than the enclosure shall not exceed 0.129 m^2(200 square inches).

Documents
Document Sharing Hub
标准分享网 www.bzfxw.com 免费下载
Full document details: UL 1741 2001

5.8.5 Expanded metal mesh and screens

5.8.5.1 The thickness of perforated sheet steel and sheet steel employed for expanded-metal mesh used to cover an opening in the enclosure shall comply with of Table 5.7.

Exception: Thicknesses less than specified in Table 5.7, and not less than specified in Table 5.8 meet the intent of the requirement where:

a) The indentation of the material does not adversely affect performance or reduce spacings to live parts below the minimum values specified in Spacings, Section 24, or Alternate Spacings-Clearances and Creepage Distances, Section 25, and

b) The opening has an area of not more than 464.5 cm^2 (72 in^2) and no dimension greater than 304.8 mm (12 inches), or

c) The width of the opening is not greater than 88.9 mm (3-1/2 inches).

Table 5.7
Minimum thickness of expanded metal mesh

Opening area	Uncoated, mm	Uncoated, (inch)	Zinc coated, mm (inch) mm	Zinc coated, mm (inch) (inch)
Maximum 323 mm^2 (0.5 in^2) or less	1.07	(0.042)	1.14	(0.045)
More than 323 mm^2 (0.5 in^2)	2.03	(0.080)	2.13	(0.084)

Table 5.8
Minimum thickness of expanded metal mesh

Uncoated, mm	Uncoated, (inch)	Zinc coated, mm	Zinc coated, (inch)
0.51	(0.020)	0.61	(0.024)

5.8.5.2 The diameter of the wires of a screen shall not be less than 1.30 mm (0.051 inch) where the screen openings are 323 mm^2 (0.5 in^2) or less in area, and not less than 2.06 mm (0.081 inch) for larger screen openings.

5.8.6 Barriers used with ventilation openings

5.8.6.1 Unless a ventilation opening is located at least 305 mm (12 inches) from an arcing part, such as a switch, fuse, circuit breaker or a similar source, a barrier shall be placed between the ventilation opening and the source of arcing.

5.8.6.2 The barrier shall be of such dimensions and so located that any straight line drawn from an arcing part past the edge of the barrier intersects a point in the ventilation opening plane that is at least 6.4 mm (0.25 inch) outside of the edge of the ventilation opening.

5.8.6.3 A sheet-metal barrier shall not be less than 1.35 mm (0.053 inch) thick when uncoated steel, 1.42 mm (0.056 inch) thick when zinc-coated, or 1.19 mm (0.075 inch) thick when aluminum.

Exception: A metal barrier of thinner material meets the intent of the requirement when its strength and rigidity are not less than that of flat sheet steel having the same dimensions of the barrier and having the specified thickness.

Documents
Document Sharing Hub
Full document details: UL 1741 2001

5.9 Environmental rated enclosures

5.9.1 An enclosure shall comply with the construction requirements applicable to an enclosure of the Type number or numbers with which it is marked.

5.9.1 effective November 7, 2000

5.9.2 An environmental type connection, such as a watertight connection at a conduit entrance, shall be a conduit hub or the equivalent, such as a knockout or fitting, located so that when conduit is connected and the enclosure is mounted in the intended manner, the enclosure complies with the tests specified in the Enclosure Types Table, in the Standard for Enclosures for Electrical Equipment, UL 50.

5.9.2 effective November 7, 2000

5.9.3 Type 3, 3R, and 3S enclosures shall comply with the Rain and Sprinkler Tests, Section 61.

5.9.3 effective November 7, 2000

5.9.4 A Type 2 enclosure shall have provision for drainage of water and shall have a threaded conduit hub or the equivalent for the connection of conduit in the top or sidewalls.

Exception No. 1: A threaded conduit hub or the equivalent is not required where the conduit connection opening is wholly below the lowest terminal lug or other live part within the enclosure. See 63.32.

Exception No. 2: A conduit hub or fitting is not required when information is provided in accordance with 63.30.

5.9.4 effective November 7, 2000

5.9.5 A Type 3 enclosure shall have:

a) A threaded conduit hub or the equivalent for a watertight connection at conduit entrances – see 5.9.2,

b) A mounting means external to the equipment cavity, and

c) Provision for locking a door, when a door is provided.

Exception: A conduit hub or fitting is not required when information is provided in accordance with 63.30.

5.9.5 effective November 7, 2000

5.9.6 A Type 3R enclosure shall have:

a) A threaded conduit hub or the equivalent for a watertight connection at conduit entrances – see 5.9.2,

b) Provision for drainage of water, and

c) Provision for locking a door, when a door is provided.

Exception No. 1: A threaded conduit hub or the equivalent is not required where the conduit connection opening is wholly below the lowest terminal lug or other live part intended for use within the enclosure. See 63.32.

Documents
Document Sharing Hub
标准分享网 www.bzfxw.com 免费下载
Full document details: UL 1741 2001

Exception No. 2: A conduit hub or fitting is not required when information is provided in accordance with 63.30.

5.9.6 effective November 7, 2000

5.9.7 A Type 3S enclosure shall have:

a) A threaded conduit hub or the equivalent for a watertight connection at conduit entrances – see 5.9.2,

b) A mounting means external to the equipment cavity,

c) Provision for locking a door, when a door is provided, and

d) Operating mechanisms that support the additional weight of ice and that withstand the removal of ice by means of a hand tool used to gain access to the interior of the enclosure when ice is present. Auxiliary means are able to be provided to break the ice and to enable operation of external mechanisms.

Exception: A conduit hub or fitting is not required when information is provided in accordance with 63.30.

5.9.7 effective November 7, 2000

5.9.8 A Type 4, 4X, 6, 6P, or 11 enclosure shall have a conduit hub or the equivalent mounted in place to provide a watertight connection at conduit entrances and shall have mounting means external to the equipment cavity – see 5.9.2.

Exception No. 1: The watertight conduit connection is not required to be mounted in place when information is provided in accordance with 65.2.4.

Exception No. 2: A hub or a fitting is not required to be provided or installed on a Type 4 or 4X enclosure when instructions are provided as specified in 65.2.6.

5.9.8 revised January 17, 2001

5.9.9 A Type 12 enclosure shall have no conduit knockout or conduit opening and no hole through the enclosure other than a hole for a Type 12 mechanism, or the equivalent. A gasket, when provided, shall be oil resistant.

Exception: A Type 12 enclosure is able to employ a conduit opening when the enclosure is marked in accordance with 63.34.

5.9.9 effective November 7, 2000

5.9.10 A Type 12K enclosure is to be as specified in 5.9.9, unless it has knockouts located in the top or bottom walls, or both.

5.9.10 effective November 7, 2000

5.9.11 A Type 13 enclosure shall have oil-resistant gaskets and, when intended for wall or machine mounting, shall have a mounting means external to the equipment cavity. There shall be no conduit knockout or unsealed opening providing access to the equipment cavity. All conduit openings shall have provisions for oiltight connections.

5.9.11 effective November 7, 2000

Documents
Document Sharing Hub

Full document details: UL 1741 2001

5.9.12 A gasket of an elastomeric or thermoplastic material or a composition gasket utilizing an elastomeric material employed to comply with the requirements for a Type 2, 3, 3R, 3S, 4, 4X, 6, 6P, 11, 12, 12K, or 13 enclosure shall comply with the Gasket Tests, Section 43, in the Standard for Enclosures for Electrical Equipment, UL 50.

5.9.12 effective November 7, 2000

5.9.13 When a component, such as a pilot light, a disconnect, a pushbutton, or similar component, intended for use with a Type designated environmental enclosure is used with a specific Type enclosure, it shall meet the following:

a) The component has been evaluated for its intended use installed on a representative enclosure.

b) All hardware, gaskets, or other parts required to complete the installation are provided with the component.

Exception: Hardware, gaskets, or other parts are not required to be provided with the component when they are available from the component manufacturer in the form of a kit and are marked or rated for the application.

c) Installation instructions including such information as mounting hole location, opening configuration, and similar information, are provided on the component, in the component package, or on a stuffer sheet.

d) The component, its carton, or accompanying instruction sheet shall be marked or rated for use on a flat surface of the specific type enclosure in the construction.

5.9.13 effective November 7, 2000

5.9.14 A drain hole shall be provided on all units to prevent the accumulation of water above a level that results in the wetting of an electrical part or opening for the connection of conduit or for an auxiliary part under all mounting orientations specified by the installation instructions. The hole shall be as specified in Table 5.9.

Exception: A unit that has been subjected to the Rain and Sprinkler Tests, Section 61, is not required to be provided with a drain hole where no water enters the fixture.

5.9.14 effective November 7, 2000

Documents
Document Sharing Hub
标准分享网 www.bzfxw.com 免费下载
Full document details: UL 1741 2001

Table 5.9
Size of drain holes

Table 5.9 effective November 7, 2000

Opening shape	Minimum dimension		Minimum area		Maximum dimension		Maximum area	
	mm	(inch)	mm^2	($inch^2$)	mm	(inch)	cm^2	($inches^2$)
Slot	3.2 (width)	(1/8)	7.74	(0.012)	9.6 (width)	(3/8)	9.68	(1-1/2)
Square	3.2 (side)	(1/8)	–		12.7 (side)	(1/2)	–	
Round	3.2 (diameter)	(1/8)	–		12.7 (diameter)	(1/2)	–	
Irregular	–		7.74	(0.012)	–		9.68	(1-1/2)

6 Protection Against Corrosion

Section 6 effective November 7, 2000

6.1 Iron and steel parts shall be protected against corrosion by enameling, galvanizing, plating, or other equivalent means. This applies to all springs and other parts which are relied upon for the intended mechanical operation.

Exception No. 1: Parts such as bearings and thermal elements for which such protection is impracticable.

Exception No. 2: Small minor parts of iron or steel such as washers, screws, or bolts that are not current-carrying and are not in the equipment grounding conductor path, when corrosion of such unprotected parts does not result in a risk of fire, electric shock, or injury to persons.

Exception No. 3: Parts made of stainless steel.

7 Mechanical Assembly

Section 7 effective November 7, 2000

7.1 A unit shall be assembled so that it is not adversely affected by the vibration of normal operation.

7.2 A switch, a fuseholder, or a lampholder shall be securely mounted and shall be prevented from turning or shifting in its mounting panel.

Exception: The requirement that a switch be prevented from turning or shifting does not apply where:

a) The switch is a plunger, slide, or other type that does not rotate when operated. A toggle switch is subjected to forces that tend to turn the switch during normal operation of the switch,

b) Means for mounting the switch prevents the switch from loosening during operation,

c) Spacings are not reduced below the minimum specified in Spacings, Section 24, or Alternate Spacings-Clearances and Creepage Distances, Section 25, when the switch rotates, and

d) Normal operation of the switch is by mechanical means rather than by direct contact by persons.

Documents
Document Sharing Hub
Full document details: UL 1741 2001

7.3 With reference to 7.2, friction between surfaces shall not be the sole means to prevent shifting or turning of live parts for a device having a single-hole mounting means. An additional means such as a lock washer applied as intended shall be used.

8 Mounting

Section 8 effective November 7, 2000

8.1 Provision shall be made for securely mounting a unit in position. Bolts, screws, or other parts used for mounting a unit shall be independent of those used for securing components to the frame, base, or panel.

Exception: A provision for mounting is not required for a floor supported or freestanding unit. See Stability, Section 58.

8.2 A keyhole slot for a mounting screw shall be provided with at least one round hole for accommodation of a permanent mounting screw. A keyhole slot shall be arranged so that a wall-mounting screw does not project into a compartment containing electrical parts and reduce spacings to less than those specified in Spacings, Section 24, or Alternate Spacings – Clearances and Creepage Distances, Section 25.

8.3 A unit shall not be provided with casters unless the casters are used solely for transporting the unit and the unit is provided with four leveling feet that are intended to be lowered after the unit is installed or the unit is provided with an equivalent means for securing the unit in position.

9 Protection of Users – Accessibility of Uninsulated Live Parts

Section 9 effective November 7, 2000

9.1 The requirements in this Section apply to a part that is accessible to the user. For protection of service personnel, see Protection of Service Personnel, Section 10.

9.2 To reduce the potential for unintentional contact that involves a risk of electric shock from an uninsulated live part or film-coated wire; electrical energy - high current levels; or injury to persons from a moving part; an opening in an enclosure shall comply with (a) or (b):

a) For an opening that has a minor dimension (see 9.5) less than 25.4 mm (1 inch), the part or wire shall not be contacted by the probe illustrated in Figure 9.1.

b) For an opening that has a minor dimension of 25.4 mm (1 inch) or more, the part or wire shall be spaced from the opening as specified in Table 9.1.

Documents
Document Sharing Hub
标准分享网 www.bzfxw.com 免费下载
Full document details: UL 1741 2001

Figure 9.1
Accessibility probe

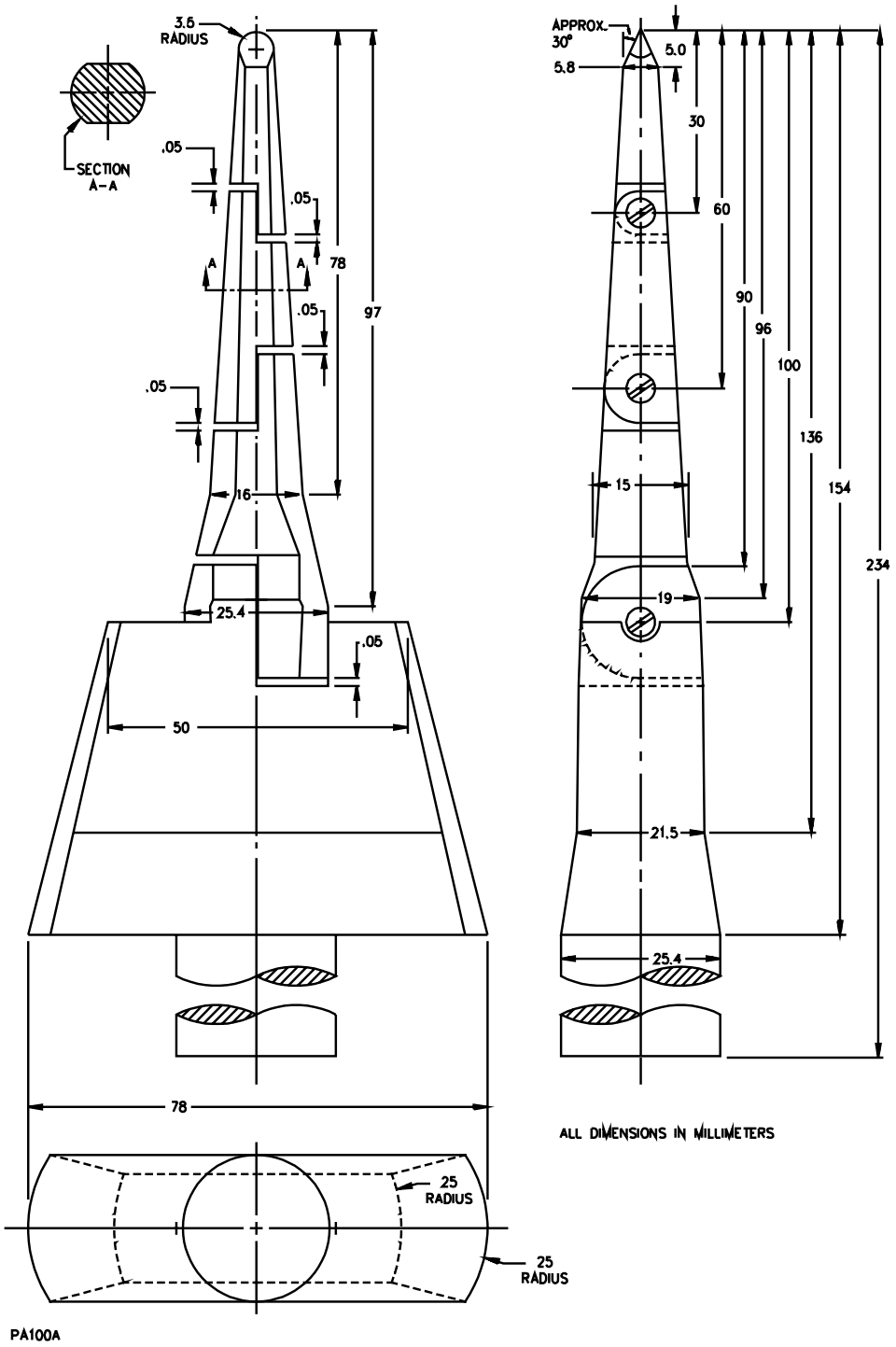

Documents
Document Sharing Hub
Full document details: UL 1741 2001

Table 9.1
Minimum distance from an opening to a part that involves a risk of electric shock, electrical energy-high current levels, or injury to persons

Minor dimension of opening[a,b]		Minimum Distance from opening to Part[b]	
mm	(inch)	mm	(inch)
25.4	(1)	165.0	(6-1/2)
31.8	(1-1/4)	190.0	(7-1/2)
38.1	(1-1/2)	318.0	(12-1/2)
47.6	(1-7/8)	394.0	(15-1/2)
54.0	(2-1/2)	444.0	(17-1/2)
(c)		762.0	(30)

[a] See 9.5.
[b] Between 25.4 and 54.0 mm, interpolation is to be used to determine a value between values specified in the table.
[c] More than 54.0 mm, and not more than 152.0 mm (5.98 in).

9.3 The probe illustrated in Figure 9.1 shall be applied to any depth that the opening accommodates; and shall be rotated or angled before, during, and after insertion through the opening to any position that is required to examine the enclosure. The probe shall be applied in any possible configuration; and, when required, the configuration shall be changed after insertion through the opening.

9.4 The probe specified in 9.3 shall be used as a measuring instrument to investigate the accessibility provided by an opening, and not as an instrument to investigate the strength of a material; it shall be applied with a maximum force of 4.4 N (1 pound).

9.5 With reference to 9.2, the minor dimension of an opening is equal to the diameter of the largest cylindrical probe that is able to be inserted through the opening.

9.6 The test pin illustrated in Figure 9.2, when inserted as specified in 9.3 through an opening in an enclosure, shall not touch any uninsulated live part that involves a risk of electric shock.

Documents
Document Sharing Hub
标准分享网 www.bzfxw.com 免费下载
Full document details: UL 1741 2001

Figure 9.2
Test pin

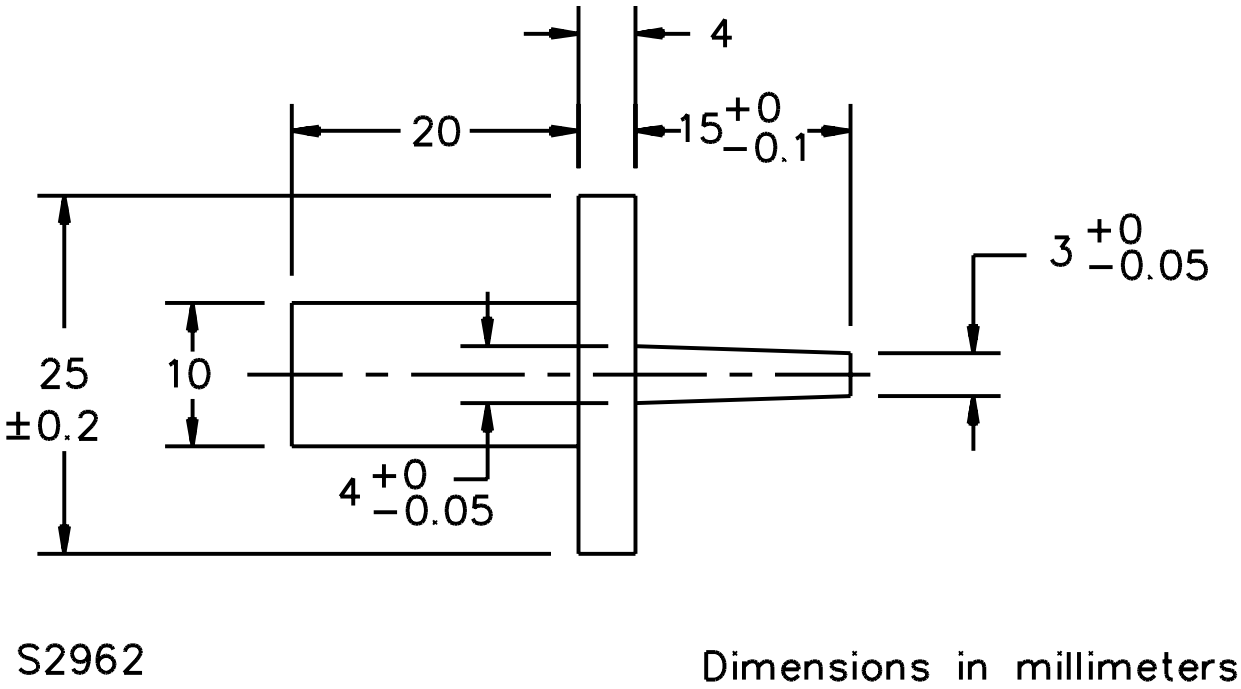

9.7 The probe shown in Figure 9.1 and the test pin shown in Figure 9.2 are to be inserted as specified in 9.3 into all openings, including those in the bottom of the unit. The unit is to be positioned so that the entire bottom is accessible for insertion of the probe.

Exception: For openings in the bottom of a floor-standing unit, the probe and test pin are only to be inserted into openings that are accessible without tipping, turning over, or otherwise moving the unit from its intended installed position.

Documents
Document Sharing Hub
Full document details: UL 1741 2001

9.8 During the examination of a unit to determine compliance with 9.2 through 9.7, a part of the enclosure that is able to be opened or removed by the user without using a tool (to attach an accessory, to make an operating adjustment, to give access to a fuse or other overload protective device as described in 5.2.1, or for other reasons) is to be opened or removed. A fastener, such as a slotted-head thumb screw, that is able to be turned by hand, does not require the use of a tool.

10 Protection of Service Personnel

Section 10 effective November 7, 2000

10.1 The requirements in this Section apply to the protection of service personnel who reach over, under, across, or around uninsulated electrical parts or moving parts to make adjustments or measurements while the unit is energized. For requirements covering protection of users, see Protection of Users – Accessibility of Uninsulated Live Parts, Section 9.

10.2 Live parts shall be arranged and covers located to reduce the risk of electric shock or electrical energy-high current levels while covers are being removed and replaced.

10.3 An uninsulated live part involving a risk of electric shock or electrical energy-high current levels and a moving part that involves a risk of injury to persons shall be located, guarded, or enclosed to protect against unintentional contact by service personnel adjusting or resetting controls, or similar actions, or performing mechanical service functions that are performed with the equipment energized, such as lubricating a motor, adjusting the setting of a control with or without marked dial settings, resetting a trip mechanism, or operating a manual switch.

10.4 Live parts involving a risk of electric shock or electrical energy-high current levels and located on the back side of a door shall be guarded or insulated to protect against unintentional contact with live parts by service personnel.

10.5 A component that requires examination, resetting, adjustment, servicing, or maintenance while energized shall be located and mounted with respect to other components and with respect to grounded metal parts so that it is accessible for electrical service functions without subjecting service personnel to a risk of electric shock, electrical energy-high current levels, or injury to persons by adjacent moving parts. Access to a component shall not be impeded by other components or by wiring.

10.6 For an adjustment that is to be made with a screwdriver or similar tool when the unit is energized, protection shall be provided against inadvertent contact with adjacent uninsulated live parts involving a risk of electric shock. Misalignment of the tool with the adjustment means when an adjustment is attempted is to be taken into account. This protection is able to be provided by:

a) Location of the adjustment means away from uninsulated live parts involving a risk of electric shock, or

b) A guard to reduce the potential for the tool contacting uninsulated live parts.

Documents
Document Sharing Hub
标准分享网 www.bzfxw.com 免费下载
Full document details: UL 1741 2001

10.7 A live heat sink for a solid-state component, a live relay frame, and similar components, involving a risk of electrical shock or electrical energy-high current levels, which is mistakable for dead metal, shall be guarded to protect against unintentional contact by service personnel or shall be marked in accordance with 64.4.

Exception: This requirement does not apply to a heat sink mounted on a printed wiring board.

10.8 A moving part that involves a risk of injury to persons and that must be in motion during service operations not involving the moving part shall be located or protected against unintentional contact with the moving parts.

10.9 Reduction of the risk of electric shock and injury to persons is able to be accomplished by mounting control components so that unimpeded access to each component is provided by an access cover or panel in the outer cabinet.

11 Electric Shock

Section 11 effective November 7, 2000

11.1 Voltage

11.1.1 The requirements described in 11.1.2 – 11.2.2 are to be used to determine whether or not the voltage of an accessible live part involves a risk of electric shock.

11.1.2 A live part does not involve a risk of electric shock where the voltage of the part does not exceed the values specified in Table 11.1.

Table 11.1
Risk of electric shock – maximum voltage

Voltage type	Indoor-use units (low potential for wet contact)	Outdoor-use units (high potential for wet contact – immersion not included)
1. Sinusoidal ac	30 V rms	15 V rms
2. Nonsinusoidal ac	42.4 V peak	21.2 V peak
3. Pure dc	60 V	30 V
4. DC interrupted at a rate of 10 to 200 Hz	24.8 V peak	12.4 V peak
5. Combinations of dc and sinusoidal ac at frequencies not greater than 100 Hz	See Figure 11.1	See Figure 11.1

Documents
Document Sharing Hub
Full document details: UL 1741 2001

Figure 11.1
Maximum voltage

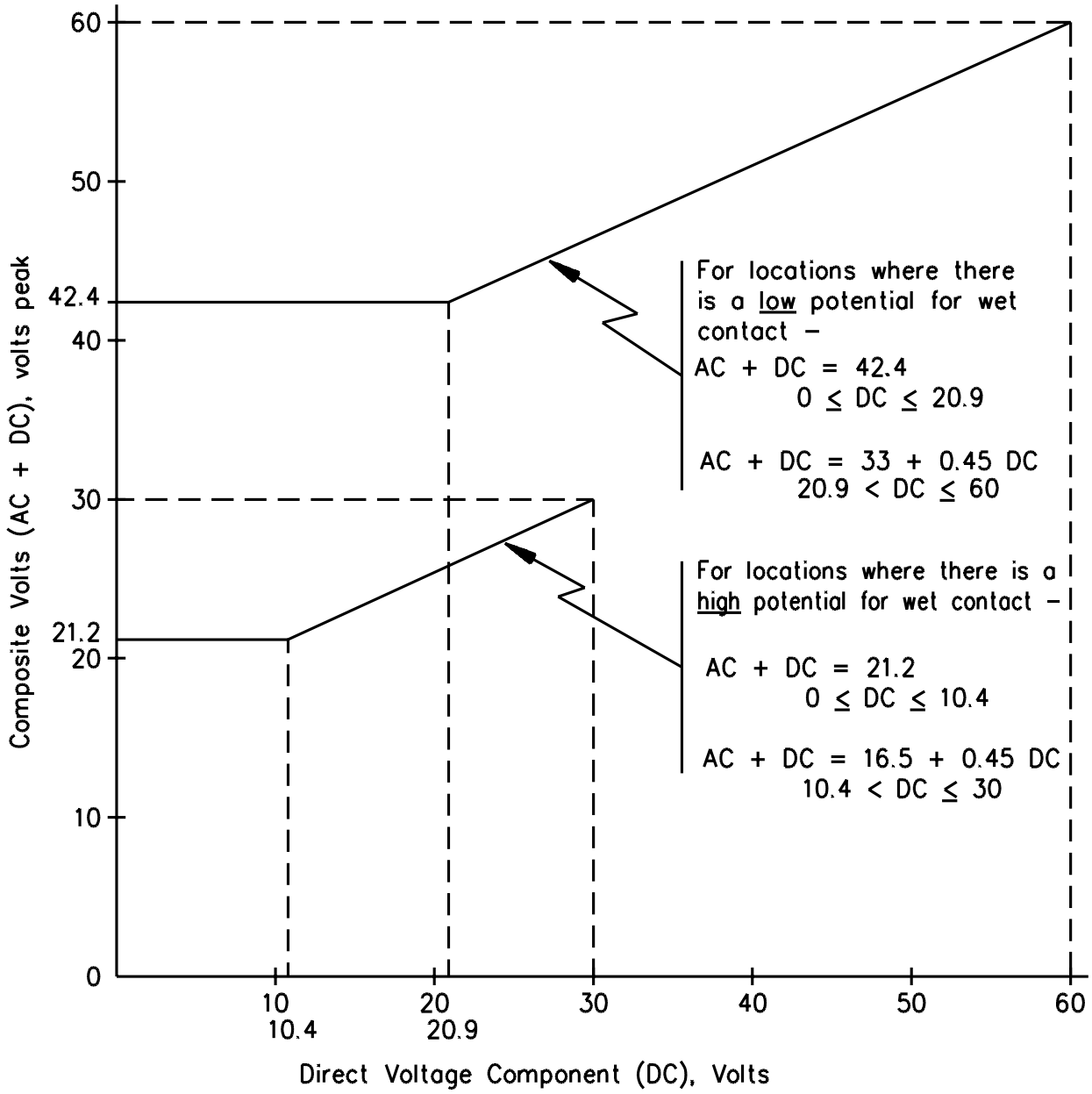

S3253B

Documents
Document Sharing Hub
标准分享网 www.bzfxw.com 免费下载
Full document details: UL 1741 2001

11.2 Stored energy

11.2.1 The capacitance between capacitor terminals that are accessible as determined in accordance with Protection of Users – Accessibility of Uninsulated Live Parts, Section 9, and Protection of Service Personnel, Section 10, shall satisfy the following expressions:

$V < 40{,}000$	where $C < 0.00328$
$V < 729\ C^{-0.7}$	where $0.00328 \leq C < 2.67$
$V < 367$	where $2.67 \leq C < 13.9$
$V < 2314\ C^{-0.7}$	where $13.9 \leq C < 184.5$ in a DRY environment
$V < 60$	where $C \geq 184.5$ in a DRY environment
$V < 2314\ C^{-0.7}$	where $13.9 \leq C < 497$ in a WET environment
$V < 30$	where $C \geq 497$ in a WET environment

in which:

C is the capacitance of the capacitor in microfarads, and

V is the voltage across the capacitor. The voltage is to be measured in accordance with 57.1. Typical calculated values are specified in Table 11.2, and the equation is shown graphically in Figure 11.2.

Documents
Document Sharing Hub

Full document details: UL 1741 2001

Table 11.2
Risk of electric shock – stored energy current

Environment	Capacitance in microfarads	Maximum voltage across the capacitor, in volts peak
Wet or Dry	0.00328 or less	40,000
	0.005	29,749
	0.01	18,313
	0.02	11,273
	0.05	5,936
	0.1	3,654
	0.2	2,249
	0.5	1,184
	1.0	729
	2.0	449
	2.0	449
	2.67 to 13.9	367
	20.0	284
	50.0	150
	100.0	92.1
	184.5	60.0
Dry only	184.5 or more	60.0
Wet	200	56.7
	497 or more	30.0

Documents
Document Sharing Hub
标准分享网 www.bzfxw.com 免费下载
Full document details: UL 1741 2001

Figure 11.2
Voltage limits across capacitors

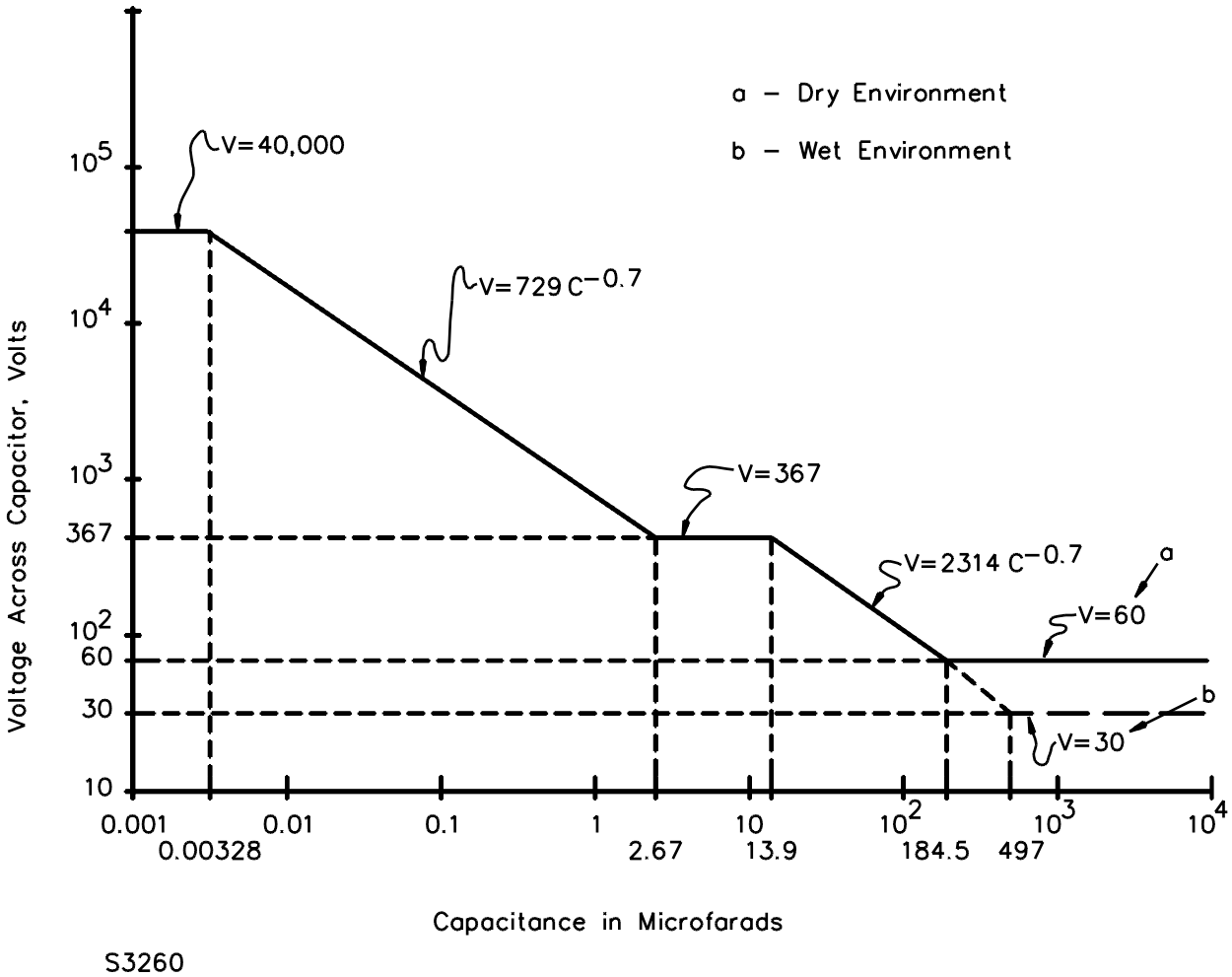

Documents
Document Sharing Hub
Full document details: UL 1741 2001

11.2.2 With reference to 11.2.1, a part involving a potential of more than 40 kilovolts peak shall be investigated to determine whether or not it involves a risk of electric shock.

11.2.3 A means such as a bleeder resistor shall be provided to drain the charge stored in a capacitor so that it does not provide a risk of electric shock or a risk of electrical energy-high current level. A risk of electric shock exists when the voltage across the capacitor, determined in accordance with Capacitor Voltage Determination Test, Section 57, exceeds the limits specified in 11.1.2. A risk of electrical energy-high current level exists when the stored energy exceeds 20 joules as determined by the following equation:

$$J = 5 \times 10^{-7} CV^2$$

in which:

J is the stored energy in Joules,

C is the capacitance in microfarads, and

V is the voltage determined in accordance with Capacitor Voltage Determination Test, Section 57.

Exception No. 1: The requirement does not apply where:

a) A tool is required to remove a panel to reach the capacitor or accessible uninsulated portions of the associated circuit,

b) The time required to discharge the capacitor is within the limitations specified in 11.2.1 and is less than 5 minutes, and

c) The unit is marked as specified in 64.11.

Exception No. 2: The requirement does not apply where:

a) The unit is marked in accordance with 64.12, and

b) The unit is provided with a built-in, insulated circuit that discharges the capacitor or capacitor bank by the actuation of a switch or by plugging in a connector. When a connector or a non-momentary type switch is used, the circuit assembly shall be constructed and evaluated for continuous operation. When a momentary type switch is used, the capacitor or capacitor bank shall be discharged to levels in accordance with Table 11.2 within 1 minute.

Exception No. 3: The requirement does not apply where:

a) The capacitor terminals and all parts connected to these terminals are insulated to protect against contact with these terminals and parts by the serviceman, and

Documents
Document Sharing Hub
标准分享网 www.bzfxw.com 免费下载
Full document details: UL 1741 2001