UL 1767

STANDARD FOR SAFETY

Early-Suppression Fast-Response Sprinklers

--`,,`,`````,`,`````,,`,`,`,,`-`-`,,`,,`,`,,`---

Documents
Document Sharing Hub

Copyright UL
Provided by IHS under license with UL
No reproduction or networking permitted without license from IHS
Full document details: UL 1767 2013

Licensee=North Carolina State Univ/5618801100
Not for Resale, 07/06/2013 21:09:09 MDT

UL COPYRIGHTED MATERIAL –
NOT AUTHORIZED FOR FURTHER REPRODUCTION OR
DISTRIBUTION WITHOUT PERMISSION FROM UL
--`,,`,``````,`,```,,`,`,,`-`-`,,`,,`,`,,`---
Documents
Document Sharing Hub
Copyright UL
Provided by IHS under license with UL
No reproduction or networking permitted without license from IHS
Licensee=North Carolina State Univ/5618801100
Not for Resale, 07/06/2013 21:09:09 MDT
Full document details: UL 1767 2013

UL Standard for Safety for Early-Suppression Fast-Response Sprinklers, UL 1767

Fourth Edition, Dated April 30, 2013

Summary of Topics

This revision to ANSI/UL 1767 is being issued to make editorial corrections to the Fourth Edition that was issued on April 30, 2013. No substantive changes have been made to any of the requirements.

Text that has been changed in any manner or impacted by UL's electronic publishing system is marked with a vertical line in the margin. Changes in requirements are marked with a vertical line in the margin and are followed by an effective date note indicating the date of publication or the date on which the changed requirement becomes effective.

All rights reserved. No part of this publication may be reproduced, stored in a retrieval system, or transmitted in any form by any means, electronic, mechanical photocopying, recording, or otherwise without prior permission of UL.

UL provides this Standard ″as is″ without warranty of any kind, either expressed or implied, including but not limited to, the implied warranties of merchantability or fitness for any purpose.

In no event will UL be liable for any special, incidental, consequential, indirect or similar damages, including loss of profits, lost savings, loss of data, or any other damages arising out of the use of or the inability to use this Standard, even if UL or an authorized UL representative has been advised of the possibility of such damage. In no event shall UL's liability for any damage ever exceed the price paid for this Standard, regardless of the form of the claim.

Users of the electronic versions of UL's Standards for Safety agree to defend, indemnify, and hold UL harmless from and against any loss, expense, liability, damage, claim, or judgment (including reasonable attorney's fees) resulting from any error or deviation introduced while purchaser is storing an electronic Standard on the purchaser's computer system.

The requirements in this Standard are now in effect, except for those paragraphs, sections, tables, figures, and/or other elements of the Standard having future effective dates as indicated in the note following the affected item. The prior text for requirements that have been revised and that have a future effective date are located after the Standard, and are preceded by a ″SUPERSEDED REQUIREMENTS″ notice.

The following table lists the future effective dates with the corresponding reference.

UL COPYRIGHTED MATERIAL –
NOT AUTHORIZED FOR FURTHER REPRODUCTION OR
DISTRIBUTION WITHOUT PERMISSION FROM UL

Documents
Document Sharing Hub

Copyright UL
Provided by IHS under license with UL
No reproduction or networking permitted without license from IHS
Full document details: UL 1767 2013

Licensee=North Carolina State Univ/5618801100
Not for Resale, 07/06/2013 21:09:09 MDT

Future Effective Dates	References
September 2, 2014	Section 51

UL COPYRIGHTED MATERIAL –
NOT AUTHORIZED FOR FURTHER REPRODUCTION OR
DISTRIBUTION WITHOUT PERMISSION FROM UL

Documents
Document Sharing Hub

Copyright UL
Provided by IHS under license with UL
No reproduction or networking permitted without license from IHS
Full document details: UL 1767 2013

Licensee=North Carolina State Univ/5618801100
Not for Resale, 07/06/2013 21:09:09 MDT

April 30, 2013

ANSI/UL 1767-2013

UL 1767

Standard for Early-Suppression Fast-Response Sprinklers

First Edition – February, 1990
Second Edition – January, 1995
Third Edition – January, 2005

Fourth Edition

April 30, 2013

This ANSI/UL Standard for Safety consists of the Fourth Edition.

The most recent designation of ANSI/UL 1767 as an American National Standard (ANSI) occurred on April 29, 2013. ANSI approval for a standard does not include the Cover Page, Transmittal Pages, Title Page, or effective date information.

Comments or proposals for revisions on any part of the Standard may be submitted to UL at any time. Proposals should be submitted via a Proposal Request in UL's On-Line Collaborative Standards Development System (CSDS) at http://csds.ul.com.

UL's Standards for Safety are copyrighted by UL. Neither a printed nor electronic copy of a Standard should be altered in any way. All of UL's Standards and all copyrights, ownerships, and rights regarding those Standards shall remain the sole and exclusive property of UL.

COPYRIGHT © 2013 UNDERWRITERS LABORATORIES INC.

UL COPYRIGHTED MATERIAL –
NOT AUTHORIZED FOR FURTHER REPRODUCTION OR
DISTRIBUTION WITHOUT PERMISSION FROM UL

Documents
Document Sharing Hub

Copyright UL
Provided by IHS under license with UL
No reproduction or networking permitted without license from IHS
Full document details: UL 1767 2013

Licensee=North Carolina State Univ/5618801100
Not for Resale, 07/06/2013 21:09:09 MDT

No Text on This Page

UL COPYRIGHTED MATERIAL –
NOT AUTHORIZED FOR FURTHER REPRODUCTION OR
DISTRIBUTION WITHOUT PERMISSION FROM UL

Documents
Document Sharing Hub

Copyright UL
Provided by IHS under license with UL
No reproduction or networking permitted without license from IHS
Full document details: UL 1767 2013

Licensee=North Carolina State Univ/5618801100
Not for Resale, 07/06/2013 21:09:09 MDT

CONTENTS

INTRODUCTION

1 Scope 6
2 Components 6
3 Unit Of Measurement 6
4 Undated References 7
5 Glossary 7

CONSTRUCTION

6 General 9
7 Inlet Threads 9
8 Temperature Ratings 10
9 Pressure Rating 10
10 Nominal “K” Factors 10
11 Coatings and Platings 11
12 Protective Covers 11

PERFORMANCE

GENERAL

13 General 11
14 Samples 12

PHYSICAL STRENGTH AND LEAKAGE TESTS

15 Load on Heat Responsive Element Test 12
16 Strength of Heat Responsive Element Test 12
16.1 Fusible-alloy types 12
16.2 Glass-bulb types 13
17 Glass Bulb Thermal Shock Test 13
18 Strength of Frame Test 14
19 Impact Resistance Test 14
20 Impact Test for Protective Covers 16
21 Rough Usage Test 18
22 Flow Endurance Test 18
23 Leakage Test 19
24 Hydrostatic Strength Test 19
25 Dry Sprinkler Air Tightness Test 19
26 30-Day Leakage Test 21
27 Water Hammer Test 21
28 Vacuum Test 22

OPERATION TESTS

29 Operating Temperature (Bath) Test 22
30 Air Bath Test for Glass Bulb Sprinklers 23
31 Sensitivity Test 23
32 Operation – Lodgement Test 26

UL COPYRIGHTED MATERIAL –
NOT AUTHORIZED FOR FURTHER REPRODUCTION OR
DISTRIBUTION WITHOUT PERMISSION FROM UL

Documents
Document Sharing Hub

Copyright UL
Provided by IHS under license with UL
No reproduction or networking permitted without license from IHS
Full document details: UL 1767 2013

Licensee=North Carolina State Univ/5618801100
Not for Resale, 07/06/2013 21:09:09 MDT

EXPOSURE AND CORROSION TEST

33 High Temperature Exposure Test – (90-Day) 28
34 Heat Resistance Test 29
35 Elastomeric Parts Test 29
36 Vibration Test 30
37 Freezing Test 30
38 Evaporation Test for Wax Coatings 31
39 10-Day Corrosion Test 31
39.1 General 31
39.2 Salt spray exposure 32
39.3 Moist hydrogen sulfide air mixture 32
39.4 Moist carbon dioxide-sulfur dioxide air mixture 32
40 30-Day Corrosion Test 32
41 90-Day Moist Air Test 33
42 Exposure Tests on Sprinklers Incorporating Polymeric Gaskets 33
42.1 General 33
42.2 Corrosive exposures 33
42.3 Temperature cycling exposure 33
42.4 Hydrocarbon exposure followed by moist air exposure 34
42.5 Hydrocarbon exposure followed by water immersion exposure 34
42.6 Exposure to antifreeze solutions 34
43 Dry-Type Sprinkler Deposit Loading Test 35
44 Dezincification Test of Brass Parts 36
44.1 General 36
44.2 Reagent 36
44.3 Test Pieces 36
44.4 Method 36
45 Stress-Corrosion Cracking of Brass Sprinkler Parts Test 37
46 Stress-Corrosion Cracking of Stainless Steel Parts Test 37

WATER FLOW AND DISTRIBUTION TESTS

47 Calibration Test 38
48 Distribution Tests for Pendent ESFR Sprinklers Having a Nominal K-factor of 14.0 or 16.8 . . 40
49 Thrust Force Test for for Pendent ESFR Sprinklers Having a Nominal K-factor of 14.0 or 16.8 . 41

FIRE TESTS

50 Water Impingement Test 42
51 Large Scale Fire Tests for Pendent ESFR Sprinklers 43
52 Actual Delivered Density (ADD) Test for Pendent ESFR Sprinklers Having a Nominal K-factor of 14.0 or 16.8 60

MANUFACTURING AND PRODUCTION TESTS

53 General 65
54 Production Leakage Test 65
55 Glass Bulb Integrity Test 65

MARKINGS

56 General 65

UL COPYRIGHTED MATERIAL –
NOT AUTHORIZED FOR FURTHER REPRODUCTION OR
DISTRIBUTION WITHOUT PERMISSION FROM UL
Documents
Document Sharing Hub
Copyright UL
Provided by IHS under license with UL
No reproduction or networking permitted without license from IHS
Full document details: UL 1767 2013
Licensee=North Carolina State Univ/5618801100
Not for Resale, 07/06/2013 21:09:09 MDT

INSTALLATION INSTRUCTIONS

57 reserved 66

APPENDIX A

Standards for Components. A1

APPENDIX B – TOLERANCE LIMIT CALCULATION METHODS

B1 General B1

UL COPYRIGHTED MATERIAL –
NOT AUTHORIZED FOR FURTHER REPRODUCTION OR
DISTRIBUTION WITHOUT PERMISSION FROM UL

Documents
Document Sharing Hub

Copyright UL
Provided by IHS under license with UL
No reproduction or networking permitted without license from IHS
Full document details: UL 1767 2013

Licensee=North Carolina State Univ/5618801100
Not for Resale, 07/06/2013 21:09:09 MDT

INTRODUCTION

1 Scope

1.1 These requirements cover early suppression fast response (ESFR) sprinklers having nominal discharge coefficients and installation orientations as referenced in this standard for installation as part of sprinkler systems for fire-protection service. Requirements for installation and use of ESFR sprinklers are included in the Standard for the Installation of Sprinkler Systems, NFPA 13, as well as other NFPA standards.

1.2 The requirements in this standard are not intended to restrict the application of representative fire and other tests for special sprinklers, as referenced in the Standard for the Installation of Sprinkler Systems, NFPA 13, that are intended to provide protection for specific fire hazards.

2 Components

2.1 Except as indicated in 2.2, a component of a product covered by this standard shall comply with the requirements for that component.

2.2 A component is not required to comply with a specific requirement that:

a) Involves a feature or characteristic not required in the application of the component in the product covered by this standard, or

b) Is superseded by a requirement in this standard.

2.3 A component shall be used in accordance with its rating established for the intended conditions of use.

2.4 Specific components are incomplete in construction features or restricted in performance capabilities. Such components are intended for use only under limited conditions, such as certain temperatures not exceeding specified limits, and shall be used only under those specific conditions.

3 Unit Of Measurement

3.1 Values stated without parentheses are the requirement. Values in parentheses are explanatory or approximate information.

UL COPYRIGHTED MATERIAL –
NOT AUTHORIZED FOR FURTHER REPRODUCTION OR
DISTRIBUTION WITHOUT PERMISSION FROM UL

Documents
Document Sharing Hub

Copyright UL
Provided by IHS under license with UL
No reproduction or networking permitted without license from IHS
Full document details: UL 1767 2013

Licensee=North Carolina State Univ/5618801100
Not for Resale, 07/06/2013 21:09:09 MDT

4 Undated References

4.1 Any undated reference to a code or standard appearing in the requirements of this standard shall be interpreted as referring to the latest edition of that code or standard.

5 Glossary

5.1 For the purpose of these requirements, the following definitions apply.

5.2 ACTUAL DELIVERED DENSITY (ADD) – The rate at which water, discharged from a sprinkler, is actually deposited onto the top of the protected horizontal surface under a fire condition.

5.3 ASSEMBLY LOAD – The extension force applied to the sprinkler frame by the assembly of its operating mechanism.

5.4 DELIVERED DENSITY – The rate at which water, discharged from a sprinkler, is actually deposited onto the top of the protected horizontal surface under a nonfire condition.

5.5 DISCHARGE COEFFICIENT ″K″ – Coefficient of discharge in the formula:

$$K = \frac{Q}{\sqrt{p}}$$

in which:

Q is the flow in gallons per minute; and

p is the pressure in pounds per square inch gauge.

In SI units:

Q is the flow in liters per minute; and

p is the pressure in bar

5.6 DRY-TYPE SPRINKLER – A sprinkler secured in an extension nipple that has a seal at the inlet end to prevent water from entering the nipple until the sprinkler operates.

Note: Dry-type ESFR sprinklers are intended for use on wet systems only since ESFR sprinklers are not intended for use in dry systems as referenced in NFPA 13.

5.7 EARLY SUPPRESSION – A characteristic of sprinkler performance whereby the first few operating sprinklers are able to deliver sufficient water to the fire to promptly reduce the fire growth and ultimately suppress the fire as indicated in the Standard for the Installation of Sprinkler Systems, NFPA 13.

5.8 EARLY-SUPPRESSION FAST-RESPONSE (ESFR) SPRINKLER – A quick responding sprinkler that automatically discharges water over a specified area to provide early suppression of a fire.

UL COPYRIGHTED MATERIAL –
NOT AUTHORIZED FOR FURTHER REPRODUCTION OR
DISTRIBUTION WITHOUT PERMISSION FROM UL

Documents
Document Sharing Hub

Copyright UL
Provided by IHS under license with UL
No reproduction or networking permitted without license from IHS
Full document details: UL 1767 2013

Licensee=North Carolina State Univ/5618801100
Not for Resale, 07/06/2013 21:09:09 MDT

5.9 HEAT RESPONSIVE ELEMENT – That portion of a sprinkler that breaks, melts, or otherwise functions to initiate the automatic operation of the sprinkler when sufficient heat has been absorbed.

5.10 HEPTANE – Commercial grade heptane having the following characteristics:

a) Minimum Initial Boiling Point of 190°F (88°C);

b) Maximum Dry Point of 212°F (100°C); and

c) Specific Gravity (60°F/60°F) (15.6°C/15.6°C) of 0.68 – 0.73.

5.11 OPERATING TEMPERATURE – The temperature at which the heat responsive element of a sprinkler operates when immersed in a liquid bath under controlled rate of rise conditions.

5.12 ORIFICE – The opening, usually circular, that controls the amount of water discharged from a sprinkler at a given pressure.

5.13 PENDENT SPRINKLER – A sprinkler intended to be installed so that its deflector is located below the orifice and the water flows downward against the deflector.

5.14 REQUIRED DELIVERED DENSITY (RDD) – The minimum rate of water that must be discharged onto the top of a protected horizontal surface under a fire condition to achieve early suppression.

5.15 RESPONSE TIME INDEX (RTI) – A measure of the thermal sensitivity of the sprinkler's heat responsive element.

5.16 STANDARD FIRE TEST COMMODITY – CARTONED GROUP A PLASTICS (UNEXPANDED) – Single wall corrugated cardboard cartons measuring a nominal 21 by 21 by 20.5 inches (0.53 by 0.53 by 0.52 m) high containing 125 crystalline polystyrene cups in separate compartments within the carton. Single wall corrugated cardboard sheets are used to separate the five layers of cups and interlocking single wall corrugated cardboard vertical dividers are used to separate the 25 cups in each layer. Eight of the cartons are arranged in a 2 x 2 x 2 array with the open end of the cups facing down and placed on a nominal 42 by 42 by 5 inches (1.1 by 1.1 by 0.13 m) high two-way hardwood pallet.

5.17 STANDARD FIRE TEST COMMODITY - CLASS II – Double tri-wall corrugated cardboard cartons with five-sided steel (open bottom) stiffeners inserted for stability. The cartons are to comply with the requirements for Class 2, Style E, ″AAA″ fluting as specified in the Federal Specification for Boxes, Fiberboard, Corrugated, Tri-Wall, PPP-B-640D. The two cartons have a combined nominal thickness of 1 inch (25.4 mm). The a nominal measurements for the outside carton are 42 by 42 by 42 inches (1.1 by 1.1 by 1.1 m) and the nominal measurements for the inside carton are 41 by 41 by 41 inches (1.0 by 1.0 by 1.0 m). The cartons are to be placed on a nominal 42 by 42 by 5 inches high (1.1 by 1.1 by 0.13 m) two-way hardwood pallet.

5.18 UPRIGHT SPRINKLER – A sprinkler intended to be installed so that its deflector is located above the orifice and the water flows upward against the deflector.

UL COPYRIGHTED MATERIAL –
NOT AUTHORIZED FOR FURTHER REPRODUCTION OR
DISTRIBUTION WITHOUT PERMISSION FROM UL

Documents
Document Sharing Hub

Copyright UL
Provided by IHS under license with UL
No reproduction or networking permitted without license from IHS
Full document details: UL 1767 2013

Licensee=North Carolina State Univ/5618801100
Not for Resale, 07/06/2013 21:09:09 MDT

CONSTRUCTION

6 General

6.1 An ESFR sprinkler shall be constructed to remain closed for extended periods of time without leakage and to open as intended and release all operating parts as specified in this standard. The closure of the water seat shall not be achieved by the use of a dynamic O-ring or similar seal (an O-ring or similar seal that moves during operation or is in contact with a component that moves during operation).

6.2 An ESFR sprinkler shall be constructed and assembled so that, upon actuation, it releases parts that will clear the waterway and provide the intended discharge pattern.

6.3 For dry-type pendent sprinklers, the connection of the extension nipple to the seal assembly at the inlet shall be airtight. See Dry Sprinkler Air Tightness Test, Section 25.

6.4 Stampings shall show no cracking or splitting and shall be uniformly smooth and clean cut.

6.5 An ESFR sprinkler shall be constructed so that visible, permanent damage will result from field adjustment or replacement of operating parts.

6.6 An ESFR sprinkler shall be constructed for installation using a standard wrench or a wrench that is made available to the installer.

6.7 For sprinklers incorporating a glass bulb heat responsive element, the filling end tip of the bulb shall be completely encased in an enclosure to minimize the potential for breakage or damage. For the purposes of applying this requirement, a bulb tip within the waterway of a dry type sprinkler shall be considered enclosed.

7 Inlet Threads

7.1 The inlet end of an ESFR sprinkler, if threaded, shall be provided with 3/4-inch or larger NPT pipe threads. Inlet pipe threads shall comply with the Standard for Pipe Threads, General Purpose (Inch), ANSI/ASME B1.20.1.

Exception: Sprinklers intended for use in installations where sprinkler fittings incorporate pipe threads other than NPT-type shall be provided with threads complying with a national pipe thread standard compatible with those fittings.

7.2 Threads shall be clean cut, true and free from burrs, scoring, or chatter marks.

UL COPYRIGHTED MATERIAL –
NOT AUTHORIZED FOR FURTHER REPRODUCTION OR
DISTRIBUTION WITHOUT PERMISSION FROM UL

Documents
Document Sharing Hub

Copyright UL
Provided by IHS under license with UL
No reproduction or networking permitted without license from IHS
Full document details: UL 1767 2013

Licensee=North Carolina State Univ/5618801100
Not for Resale, 07/06/2013 21:09:09 MDT

8 Temperature Ratings

8.1 The temperature ratings, classifications, and color coding of the frame arms or glass bulb heat responsive elements of an ESFR sprinkler shall be as specified in Table 8.1.

Table 8.1
Temperature ratings, classifications and color coding

Temperature rating °F	(°C)	Temperature classification	Color code, frame	Color code, bulb
155 – 165	(68 – 74)	Ordinary	Uncolored or Black	Red
175 – 220	(79 – 104)	Intermediate	White	Yellow 175°F (68°C) or Green 200, 225°F (93, 107°C)

9 Pressure Rating

9.1 An ESFR sprinkler shall have a rated pressure of 175 psig (1.2 Mpa).

10 Nominal "K" Factors

10.1 An ESFR sprinkler shall have a "K" factor as specified in Table 10.1. The nominal "K" factor is to be determined from the discharge coefficient "K", as specified by the Calibration Test, Section 47.

Table 10.1
Nominal "K" factor and thread size

Nominal K-Factor, gpm/(psi)$^{1/2}$[L/min/(bar)$^{1/2}$]	Discharge coefficient ″K″		External thread-type
	gpm/(psi)$^{1/2}$	[L/min/(bar)$^{1/2}$]	Inch NPT
14.0 (200)	13.5 – 14.5	(195 – 209)	3/4
16.8 (240)	16.0 – 17.6	(231 – 254)	3/4
22.4 (320)	21.3 – 23.5	(311 – 343)	1
25.2 (360)	23.9 – 26.5	(349 – 387)	1

10.2 An ESFR sprinkler shall have a mean ″K″ factor that is within the discharge coefficient range specified in Table 10.1, as determined by the Calibration Test, Section 47.

10.3 The diameter of a discharge orifice or any internal passage of an ESFR sprinkler shall be at least 0.37 inch (9.4 mm).

UL COPYRIGHTED MATERIAL –
NOT AUTHORIZED FOR FURTHER REPRODUCTION OR
DISTRIBUTION WITHOUT PERMISSION FROM UL

Documents
Document Sharing Hub

Copyright UL
Provided by IHS under license with UL
No reproduction or networking permitted without license from IHS
Full document details: UL 1767 2013

Licensee=North Carolina State Univ/5618801100
Not for Resale, 07/06/2013 21:09:09 MDT

11 Coatings and Platings

11.1 The operation and distribution characteristics of an ESFR sprinkler shall not be impaired by the application of a factory-applied coating or plating when the sprinkler is tested in accordance with these requirements.

11.2 A corrosion resistant coating or plating shall be uniformly applied.

11.3 A coating shall not be brittle when new nor become brittle with age as specified by the Evaporation Test for Wax Coatings, Section 38.

11.4 A coating shall not crack, flake, slip, or flow when tested in accordance with these requirements at the maximum permitted installation temperature as specified by the High Temperature Exposure Test – (90-Day), Section 33.

12 Protective Covers

12.1 Sprinklers with glass bulb type heat responsive elements shall be equipped with protective covers that are designed to remain in place during installation and be removed before the sprinkler system is placed in service.

Exception: Certain sprinkler designs, such as dry sprinklers and sprinklers with guards, may not be required to have protective covers.

12.2 Sprinklers required to be equipped with sprinkler covers shall comply with Section 20, Impact Test for Protective Covers, and 56.8.

PERFORMANCE

GENERAL

13 General

13.1 To determine compliance with these requirements, the various types and patterns of an ESFR sprinkler shall be subjected to the performance tests described in Sections 15 – 52.

UL COPYRIGHTED MATERIAL –
NOT AUTHORIZED FOR FURTHER REPRODUCTION OR
DISTRIBUTION WITHOUT PERMISSION FROM UL

Documents
Document Sharing Hub

Copyright UL
Provided by IHS under license with UL
No reproduction or networking permitted without license from IHS
Full document details: UL 1767 2013

Licensee=North Carolina State Univ/5618801100
Not for Resale, 07/06/2013 21:09:09 MDT

14 Samples

14.1 The number of samples required for investigation may vary for different types and patterns of an ESFR sprinkler and is to be determined following a review of detailed drawings, examination of a preliminary sample, or both.

PHYSICAL STRENGTH AND LEAKAGE TESTS

15 Load on Heat Responsive Element Test

15.1 The average and maximum design loads exerted on the heat responsive element, and the overall load tolerance based on the design load for the assembly, is to be determined. When the application of the rated working pressure to the inlet end of the sprinkler increases the assembly load by more than 10 percent, the additional load is to be added to the measured load on the heat responsive element. The information developed shall be used for the Strength of Heat Responsive Element Test, Section 16.

15.2 At least 25 samples are to be tested to determine the average load. An arrangement for measuring the load on the heat responsive element is to be developed for each specific design.

16 Strength of Heat Responsive Element Test

16.1 Fusible-alloy types

16.1.1 A heat responsive element of an ESFR sprinkler shall either:

a) Sustain a load of 15 times its maximum design load for 100 hours; or

b) Demonstrate the ability to sustain the maximum design load when tested in accordance with 16.1.2 and 16.1.3.

16.1.2 Compliance with 16.1.1(a) is to be determined by subjecting at least ten sample heat responsive elements to a load of 15 times the maximum design load for at least 100 hours. Compliance with 16.1.1(b) is to be determined by subjecting sample heat-responsive elements to loads in excess of the maximum design load. A minimum of 15 samples are to be loaded at various values as required up to 15 times the design load. At least one test load value shall produce a heat responsive element failure time greater than 1000 hours. These load and failure time values are then to be used to derive a least-square, full logarithmic regression curve of time as a function of load, from which the loads at 1 hour and 1000 hours are to be determined. The design load shall comply with the following:

UL COPYRIGHTED MATERIAL –
NOT AUTHORIZED FOR FURTHER REPRODUCTION OR
DISTRIBUTION WITHOUT PERMISSION FROM UL

Documents
Document Sharing Hub

Copyright UL
Provided by IHS under license with UL
No reproduction or networking permitted without license from IHS
Full document details: UL 1767 2013

Licensee=North Carolina State Univ/5618801100
Not for Resale, 07/06/2013 21:09:09 MDT

$$L_d \leq \frac{1.02\, L_m^2}{L_o}$$

in which:

L_d is the maximum design load;

L_m is the load at 1000 hours; and

L_o is the load at 1 hour.

16.1.3 The load tests are to be conducted at an ambient temperature of 70 ±5°F (21 ±3°C).

16.2 Glass-bulb types

16.2.1 The lower tolerance limit for bulb strength, based on calculations with a degree of confidence of 0.99 for 99 percent of samples, shall exceed two times the upper tolerance limit for sprinkler assembly load based on calculations with the same degree of precision as for bulb strength.

16.2.2 The bulb strength is to be measured by applying a steadily increasing load, utilizing a compression testing machine, until the bulb breaks. This test is to be conducted with the bulb mounted in the seating parts, with the same dimensions used in the sprinkler and a material hardness within the range of 38 – 50 Rockwell C. The rate of loading shall not exceed 55 pounds-force load per second (25 kg/s) or 0.05 inch per minute (1.27 mm/min). Bulb seats shall be permitted to be reinforced circumferentially to not interfere with the bulb breakage. A minimum of 15 samples of each temperature rating and each bulb type are to be tested. See Appendix B.

16.2.3 Calculations are to be based on the Normal or Gaussian Distribution except where another distribution can be shown to be more applicable due to manufacturing or design factors.

17 Glass Bulb Thermal Shock Test

17.1 A sprinkler having a glass bulb shall withstand the thermal shock of rapid temperature changes without breakage or fracture of the glass bulb when tested as specified in 17.2.

17.2 At least five samples of the sprinkler are to be conditioned for 5 minutes in a liquid bath at 20°F (11°C) less than the marked temperature rating. The samples then are to be removed and immediately submerged in another liquid bath at 50°F (10°C). The bulb of each sprinkler shall be visually observed for signs of breakage or fracture.

UL COPYRIGHTED MATERIAL –
NOT AUTHORIZED FOR FURTHER REPRODUCTION OR
DISTRIBUTION WITHOUT PERMISSION FROM UL

Documents
Document Sharing Hub

Copyright UL
Provided by IHS under license with UL
No reproduction or networking permitted without license from IHS
Full document details: UL 1767 2013

Licensee=North Carolina State Univ/5618801100
Not for Resale, 07/06/2013 21:09:09 MDT

18 Strength of Frame Test

18.1 An ESFR sprinkler frame shall not show permanent distortion in excess of 0.2 percent of the distance between the frame bearing points when subjected to a test loading of twice its assembly load at rated hydrostatic pressure.

18.2 The distance between frame load-bearing points is to be measured to the nearest 0.001 inch (0.03 mm) from the plane of the sprinkler-orifice outlet at the center of the orifice to the center of the compression bearing surface on the frame.

18.3 At least ten samples are to be individually installed in a test apparatus. A measuring instrument is to be attached to indicate the amount of deflection at the deflector end of the sprinkler frame.

18.4 The heat responsive element of the sample is to be carefully removed to not damage the frame. The negative axial deflection, due to release of the assembly, is to be recorded. A load is then to be applied to redeflect the sprinkler frame at a rate of 0.02 inch (0.51 mm) per minute until the deflection returns to zero. The load at zero deflection is to be recorded as the assembly load. An alternative means to measure the sprinkler assembly load shall be permitted to be utilized when determined to provide equivalent or more accurate results.

18.5 A load of twice the assembly load at rated pressure is then to be applied to the individual sample. The deflection during the load application and the amount of permanent set after the load application are to be determined to verify compliance with the requirements in 18.1.

19 Impact Resistance Test

19.1 An ESFR sprinkler, except for dry-type sprinklers, shall not be damaged or leak when tested as described in 19.2.

19.2 Five samples are to be tested by dropping a cylindrical mass equivalent to the mass of the sprinkler to the nearest 15-g (0.5-oz) increment from a height of 1 meter (3.28 feet) onto the geometric center of the deflector. See Figure 19.1. The mass is to be prevented from impacting more than once upon each sample. Following the impact, each sprinkler is to be visually examined and there shall be no evidence of cracks, breaks, or any other damage. Each sample shall then comply with the Leakage Test, Section 23 and to the Sensitivity Test, Section 31.

UL COPYRIGHTED MATERIAL –
NOT AUTHORIZED FOR FURTHER REPRODUCTION OR
DISTRIBUTION WITHOUT PERMISSION FROM UL

Documents
Document Sharing Hub

Copyright UL
Provided by IHS under license with UL
No reproduction or networking permitted without license from IHS
Full document details: UL 1767 2013

Licensee=North Carolina State Univ/5618801100
Not for Resale, 07/06/2013 21:09:09 MDT

Figure 19.1
Impact test apparatus

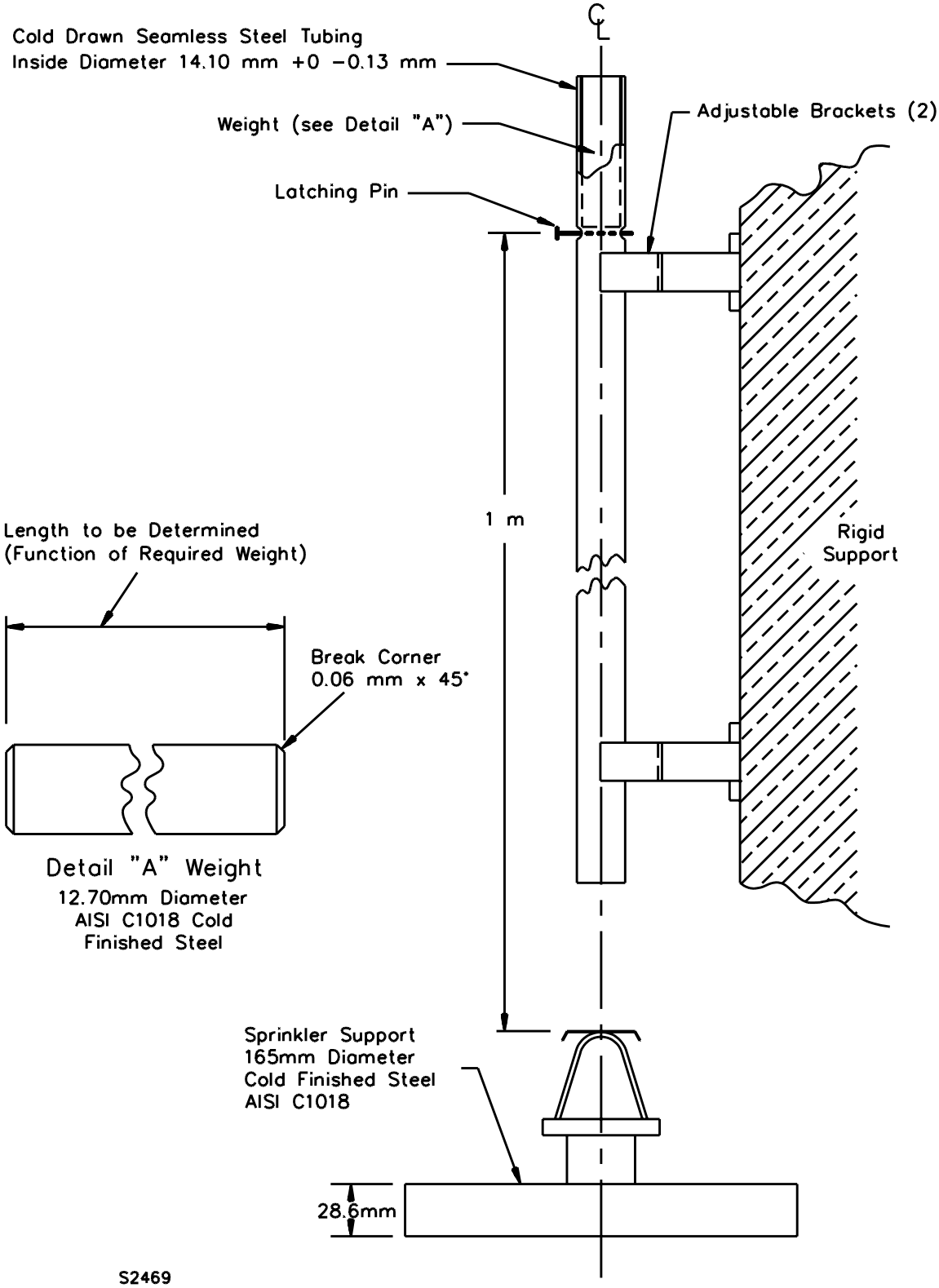

UL COPYRIGHTED MATERIAL –
NOT AUTHORIZED FOR FURTHER REPRODUCTION OR
DISTRIBUTION WITHOUT PERMISSION FROM UL

Documents
Document Sharing Hub

Copyright UL
Provided by IHS under license with UL
No reproduction or networking permitted without license from IHS
Full document details: UL 1767 2013

Licensee=North Carolina State Univ/5618801100
Not for Resale, 07/06/2013 21:09:09 MDT

20 Impact Test for Protective Covers

20.1 A glass bulb type sprinkler, with the protective cover installed, shall not be damaged or leak and the cover remain in place when tested as described in 20.2. See Figure 20.1.

UL COPYRIGHTED MATERIAL –
NOT AUTHORIZED FOR FURTHER REPRODUCTION OR
DISTRIBUTION WITHOUT PERMISSION FROM UL

Documents
Document Sharing Hub

Copyright UL
Provided by IHS under license with UL
No reproduction or networking permitted without license from IHS
Full document details: UL 1767 2013

Licensee=North Carolina State Univ/5618801100
Not for Resale, 07/06/2013 21:09:09 MDT

Figure 20.1
Impact test apparatus for protective covers

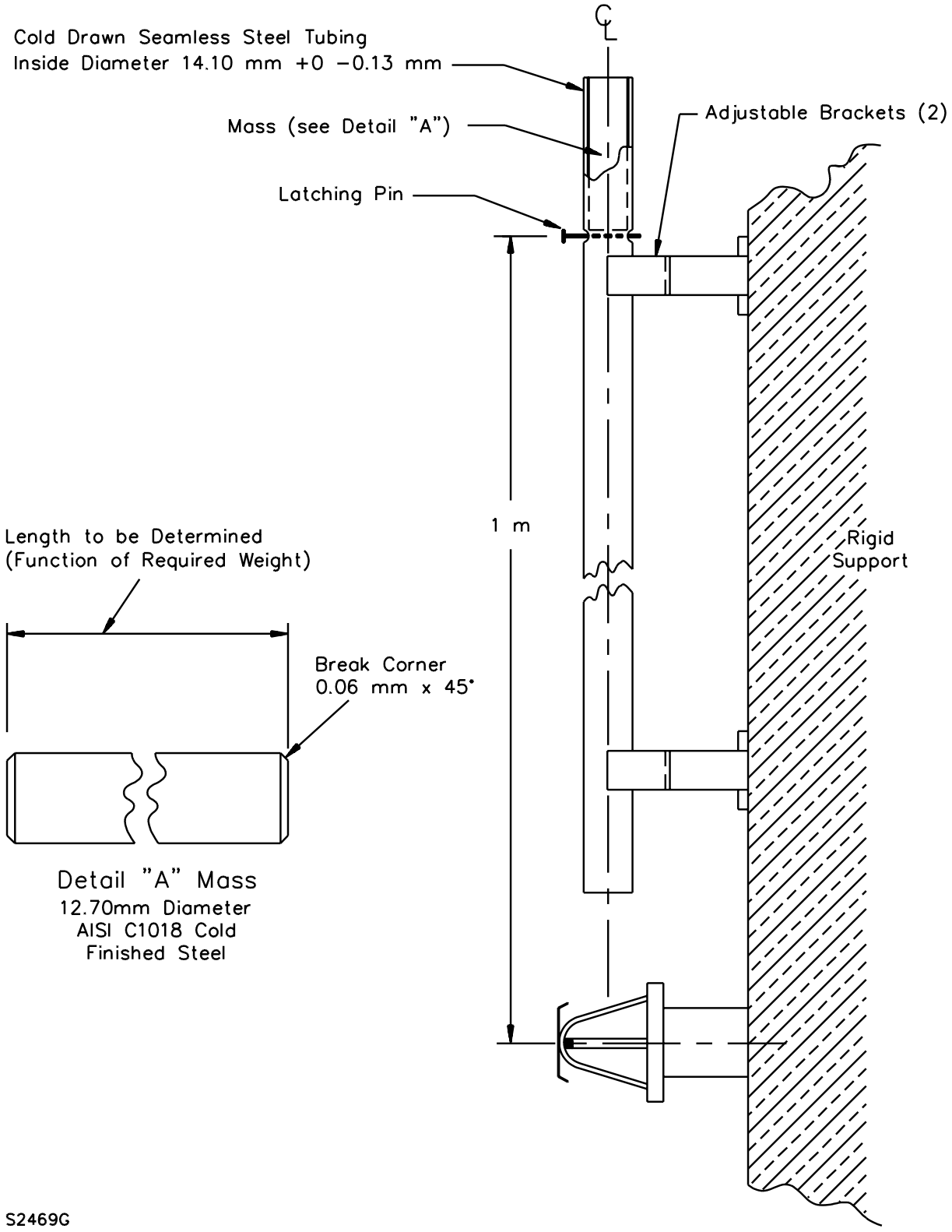

UL COPYRIGHTED MATERIAL –
NOT AUTHORIZED FOR FURTHER REPRODUCTION OR
DISTRIBUTION WITHOUT PERMISSION FROM UL

Documents
Document Sharing Hub

Copyright UL
Provided by IHS under license with UL
No reproduction or networking permitted without license from IHS
Full document details: UL 1767 2013

Licensee=North Carolina State Univ/5618801100
Not for Resale, 07/06/2013 21:09:09 MDT

20.2 Five sample glass bulb sprinklers with their protective covers are to be mounted in the horizontal position and impacted with a cylindrical mass equivalent to the mass of the sprinkler to the nearest 15-gram increment from a height of one meter onto the geometric center of the glass bulb heat responsive element. Five additional samples are to be tested with the impact applied to the opposite side of the sprinkler if the cover is designed to provide unsymmetrical protection. If the glass bulb extends beyond the perimeter of the sprinkler deflector, an additional five sample sprinklers are to be mounted in the vertical position and impacted with the same cylindrical mass from a height of one meter onto the geometric center of the glass heat responsive element. The mass is to be prevented from impacting more than once upon each sample. Following the impact, each sprinkler is to be visually examined and there shall be no evidence of cracks, breaks, or any other damage to the glass. Each sample sprinkler shall then to be subjected to the Leakage Test, Section 23. In addition, each sample shall then be subjected to the Sensitivity Test, Section 31.

21 Rough Usage Test

21.1 An ESFR sprinkler, except for dry sprinklers, shall withstand the effects of rough usage without deterioration of its performance characteristics. Following 3 minutes of tumbling as described in 21.3, the sprinkler shall comply with the Leakage Test, Section 23, and with the Sensitivity Test, Section 31.

21.2 Five sample sprinklers are to be tested. The sprinklers may be tested with a shipping protector in place if the protector is intended to be removed from the sprinkler after the sprinkler is installed and reference to this removal requirement is made in the installation instructions.

21.3 Five samples are to be individually placed in a vinyl-lined right hexagonal prism-shaped drum[a] designed to provide a tumbling action. The drum is to have an axis of rotation of 10 inches (254 mm). The distance between opposite sides is to be 12 inches (305 mm). For each test, one sample and five 1-1/2-inch (38.1-mm) hardwood cubes are to be placed in the drum. The drum is to be rotated at one revolution per second for 3 minutes. The sample is to be removed from the drum, examined for signs of damage or deformation, and then subjected to the Leakage Test, Section 23, and to the Sensitivity Test, Section 31.

[a] A drum acceptable for this test is available from Kramer Industries, Inc., Copiague, NY 11726, Model K1401.

22 Flow Endurance Test

22.1 An ESFR sprinkler shall withstand for 30 minutes, without evidence of cracking, deformation, or separation of any part, a water flow at a pressure of 200 psi (1.38 MPa) or 25 psi (172 kPa) above the maximum design pressure, whichever is higher.

22.1 revised May 6, 2013

22.2 Three automatic ESFR sprinklers are to be tested. Each sample is to be installed in a pressurized water system in its intended installation orientation having a supply pipe with a minimum nominal diameter of 1-1/2 inches (38.1 mm). The heat responsive element of the sample is to be activated at the specified test pressure, and the water flow shall be adjusted to obtain the specified test pressure for 30 minutes.

22.2 revised May 6, 2013

UL COPYRIGHTED MATERIAL –
NOT AUTHORIZED FOR FURTHER REPRODUCTION OR
DISTRIBUTION WITHOUT PERMISSION FROM UL

Documents
Document Sharing Hub

Copyright UL
Provided by IHS under license with UL
No reproduction or networking permitted without license from IHS
Full document details: UL 1767 2013

Licensee=North Carolina State Univ/5618801100
Not for Resale, 07/06/2013 21:09:09 MDT

23 Leakage Test

23.1 An ESFR sprinkler shall not exhibit any leakage at any pressure from 0 – 500 psig (0 – 3.45 MPa) when tested as described in 23.2 and 23.3.

23.2 At least 20 samples are to be individually tested. The samples are to be filled with water and vented of air.

23.3 The pressure is to be increased from 0 to 500 psig (0 to 3.45 MPa) at a rate not exceeding 300 psig (2.07 MPa) per minute and held for 1 minute. There shall be no visible leakage in any sample at any pressure.

24 Hydrostatic Strength Test

24.1 An ESFR sprinkler shall withstand, for 1 minute, without rupture, an internal hydrostatic pressure of 700 psig (4.8 MPa).

24.2 Twenty samples are to be individually tested. The sprinkler inlets are to be filled with water and vented of air. The pressure is to be increased from 0 to 700 psig (0 to 4.8 MPa) at a rate not exceeding 300 psig (2.07 MPa) per minute. The pressure is to be maintained at 700 psig (4.8 MPa) and held for 1 minute. The sample shall not rupture, operate, or release any of its operating parts during the pressure increase nor while being maintained at 700 psig (4.8 MPa) for 1 minute.

25 Dry Sprinkler Air Tightness Test

25.1 When tested as described in 25.2 and 25.3, the connection of the extension nipple to the inlet seal assembly for a dry-type pendent sprinkler shall not exhibit leakage at any air pressure from 0 to 15 psig (0 to 103 kPa) when the pressure is applied externally to this connection.

25.2 At least five samples of the minimum length produced are to be individually tested. The assembly is to be installed in an air leakage test fixture in such a manner that the extension nipple connection to the inlet seal assembly can be fully pressurized with air. See Figure 25.1.

UL COPYRIGHTED MATERIAL –
NOT AUTHORIZED FOR FURTHER REPRODUCTION OR
DISTRIBUTION WITHOUT PERMISSION FROM UL

Documents
Document Sharing Hub

Copyright UL
Provided by IHS under license with UL
No reproduction or networking permitted without license from IHS
Full document details: UL 1767 2013

Licensee=North Carolina State Univ/5618801100
Not for Resale, 07/06/2013 21:09:09 MDT