UL 1838

Underwriters Laboratories Inc.

Standard for Safety

Low Voltage Landscape Lighting Systems

AVA Documents
Document Sharing Hub

Full document details: UL 1838 2009

Documents
Document Sharing Hub

Full document details: UL 1838 2009

UL Standard for Safety for Low Voltage Landscape Lighting Systems, UL 1838

Third Edition, Dated January 13, 2003

Summary of Topics

These revisions to ANSI/UL 1838 are being issued to address universal upkeep of UL Standards for Safety. These revisions are considered to be non-substantive and not subject to UL's STP process.

Text that has been changed in any manner or impacted by UL's electronic publishing system is marked with a vertical line in the margin. Changes in requirements are marked with a vertical line in the margin and are followed by an effective date note indicating the date of publication or the date on which the changed requirement becomes effective.

All rights reserved. No part of this publication may be reproduced, stored in a retrieval system, or transmitted in any form by any means, electronic, mechanical photocopying, recording, or otherwise without prior permission of UL.

UL provides this Standard ″as is″ without warranty of any kind, either expressed or implied, including but not limited to, the implied warranties of merchantability or fitness for any purpose.

In no event will UL be liable for any special, incidental, consequential, indirect or similar damages, including loss of profits, lost savings, loss of data, or any other damages arising out of the use of or the inability to use this Standard, even if UL or an authorized UL representative has been advised of the possibility of such damage. In no event shall UL's liability for any damage ever exceed the price paid for this Standard, regardless of the form of the claim.

Users of the electronic versions of UL's Standards for Safety agree to defend, indemnify, and hold UL harmless from and against any loss, expense, liability, damage, claim, or judgment (including reasonable attorney's fees) resulting from any error or deviation introduced while purchaser is storing an electronic Standard on the purchaser's computer system.

The requirements in this Standard are now in effect, except for those paragraphs, sections, tables, figures, and/or other elements of the Standard having future effective dates as indicated in the note following the affected item. The prior text for requirements that have been revised and that have a future effective date are located after the Standard, and are preceded by a ″SUPERSEDED REQUIREMENTS″ notice.

Documents
Document Sharing Hub

Full document details: UL 1838 2009

No Text on This Page

Documents
Document Sharing Hub

Full document details: UL 1838 2009

JANUARY 13, 2003
(Title Page Reprinted: November 19, 2009)

ANSI/UL 1838-2009

UL 1838

Standard for Low Voltage Landscape Lighting Systems

First Edition – March, 1994
Second Edition – March, 1996

Third Edition

January 13, 2003

This ANSI/UL Standard for Safety consists of the Third edition including revisions through November 19, 2009.

The most recent designation of ANSI/UL 1838 as an American National Standard (ANSI) occurred on August 18, 2009. ANSI approval for a standard does not include the Cover Page, Transmittal Pages, Title Page, or effective date information.

Comments or proposals for revisions on any part of the Standard may be submitted to UL at any time. Proposals should be submitted via a Proposal Request in UL's On-Line Collaborative Standards Development System (CSDS) at http://csds.ul.com.

UL's Standards for Safety are copyrighted by UL. Neither a printed nor electronic copy of a Standard should be altered in any way. All of UL's Standards and all copyrights, ownerships, and rights regarding those Standards shall remain the sole and exclusive property of UL.

COPYRIGHT © 2009 UNDERWRITERS LABORATORIES INC.

Documents
Document Sharing Hub

Full document details: UL 1838 2009

No Text on This Page

Documents
Document Sharing Hub

Full document details: UL 1838 2009

CONTENTS

INTRODUCTION

1 Scope 9
2 Glossary 10
2A Electric Shock 14
3 Components 14C
4 Units of Measurement 14C
5 Undated References 14C
6 Organization and Application 14C

PART 1 – POWER UNITS

MECHANICAL CONSTRUCTION

7 General 14D
8 Enclosures 15
9 Metal Thickness 15
9.1 Sheet metal 15
9.2 Extrusions 16
9.3 Cast metal 16
10 Corrosion Protection 16
11 Open Holes 18
12 Drain Holes 20
13 Openings 21
14 Gaskets and Bushings 21

ELECTRICAL CONSTRUCTION

15 General 21
15.1 Class 2 Circuits Within Power Unit 21
15.2 Wiring devices 22
15.3 Internal wiring connections 22
15.4 Insulation 22
15.5 Prevention of wire damage 22A
16 Device and Conductor Ratings 23
16.1 Voltage 23
16.2 Current 23
17 Switches and Relays 23
18 Convenience Receptacles 24
19 Wiring and Conductors 24
20 Protective Devices 25
21 Printed Wiring Boards 25
22 Separation of Circuits 25
22.1 General 25
22.2 Separation of Conductors 25
22.3 Output circuit isolation 26
23 Electrical Spacings 27
24 Power Supply and Output Circuit Connections 29
24.1 Power supply connection method 29

Documents
Document Sharing Hub
Full document details: UL 1838 2009

24.2 Power supply conduit connection and conductor connection provisions 29
24.3 Power supply cord 31
24.4 Output circuit connection provisions 32
24.5 *Deleted August 7, 2007* 33
25 Grounding and Bonding 33
25.1 Grounding 33
25.2 Bonding 34A
26 Water Shields 35

PERFORMANCE

27 Test Parameters 35
28 Input and Output Tests 36
28.1 Input test 36
28.2 Maximum output test 36
29 Overload Test 36
30 Burnout Test 38
31 Endurance Test 38
32 Dielectric Voltage Withstand Test 39
33 Temperature Test 40
34 Grounding Continuity Test 43
35 Leakage Current Test 44
36 Leakage Current Test Following Humidity Conditioning 47
37 Weather Tests 48
37.1 General 48
37.2 Impact conditioning 48
37.3 General – test conditions 48
37.4 General – test results 49
37.5 Sprinkler test 49
37.6 Immersion test 52
37.7 Gasket tests 52
37.8 Gasket adhesion test 53
37.9 Rain test 53
38 Strain Relief Test 55
39 Screw Torque Test 55
40 Polymeric Enclosure Conduit Connection Tests 55
40.1 General 55
40.2 Pullout 55
40.3 Torque 56
40.4 Bending 56
41 Tests on knockouts 57
42 Impact Test on Units With Open Holes 58
43 Component Fault Test 58
44 Short Circuit Test 59
45 Limited Short Circuit Test 59

MANUFACTURING AND PRODUCTION TESTS

46 Dielectric Voltage Withstand Test 60
47 Polarity Test 61
48 Continuity of Grounding Connection Test 61

Documents
Document Sharing Hub
Full document details: UL 1838 2009

RATINGS

49 Details 62

MARKING

50 Details 62
51 Installation Instructions 65

PART 2 – EQUIPMENT CONNECTED TO THE POWER UNIT OUTPUT

CONSTRUCTION

52 General 66
53 Output Circuit Wiring and Connections 67
53.1 General 67
53.2 Internal wiring 67
53.3 Main low voltage cable 68
53.4 Unit low voltage cable 68

PERFORMANCE

54 Temperature 69
55 Insulation-Piercing Terminal Temperature Test 70

MARKING

56 General 72
57 Installation Instructions 73

PART 3 – TUNGSTEN-HALOGEN LUMINAIRES

INTRODUCTION

58 General 74

CONSTRUCTION

59 Lamp Containment Barrier 74

PERFORMANCE

60 Adhesively Secured Lamp Containment Barrier Test 75
61 Lamp Containment Adhesive Support Test 76
62 Abnormal Operation Tests 76
62.1 General 76
62.2 Severe condition 77
62.3 Vertical surface 77
62.4 Overlamping 78
63 Polymeric Lamp Containment Barrier Test 78
63.1 General 78

Documents
Document Sharing Hub
Full document details: UL 1838 2009

63.2 Test method 78

MARKING

64 General 79
65 Instructions 80

PART 4 – POND AND SMALL DECORATIVE FOUNTAIN LUMINAIRES AND FITTINGS

INTRODUCTION

66 General 81

CONSTRUCTION

67 Water Barriers 82
67.1 General 82
67.2 Gaskets 82
67.3 Adhesives and Sealants 83
68 Immersed Low Voltage Cable 84

PERFORMACE

69 Temperature Test 84
70 Water Leakage Test Following Seal and Impact Conditioning 85
70.1 General 85
70.2 Impact conditioning 85
70.3 Water leakage 86

MARKING

71 General 87

INSTRUCTIONS

72 Installation Instructions 88

Appendix A

Standards for Components. A1

Documents
Document Sharing Hub

Full document details: UL 1838 2009

No Text on This Page

Documents
Document Sharing Hub

Full document details: UL 1838 2009

This page intentionally left blank.

Documents
Document Sharing Hub

Full document details: UL 1838 2009

INTRODUCTION

1 Scope

1.1 The requirements in this standard apply to a low-voltage landscape lighting system and components that consist of an isolating type power unit, low voltage cable or flexible cord, and luminaires. The equipment is intended to be installed in accordance with the National Electrical Code, ANSI/NFPA 70.

Revised 1.1 effective August 7, 2009

1.2 Landscape lighting power units covered by this standard have a maximum output circuit voltage as specified in Table 2A.1.

Revised 1.2 effective August 7, 2009

1.3 This standard covers power units where each output circuit is rated maximum 25 A and 300 VA.

1.3 revised August 7, 2007

1.4 This standard covers landscape lighting system luminaires and other system components that are intended for use on circuits rated maximum 25 A 300 VA, and the voltage specified in Table 2A.1.

1.4 added August 7, 2007

1.5 The luminaires and low voltage system components covered by this standard are intended for garden, walkway, patio areas, or similar outdoor locations and for certain indoor locations such as atriums and shopping malls. The power units are to be installed indoors or outdoors in accordance with the marking on the product (see 6.3).

1.5 added August 7, 2007

1.6 This standard covers luminaires and low voltage system components intended for use submersed in or floating on:

a) portable self-contained fountains; and

b) ponds and other natural and artificially made body of water within the scope of Article 682 “Natural and Artificially Made Bodies of Water” of the National Electrical Code, NFPA 70.

Added 1.6 effective August 7, 2009

1.7 Throughout this standard, all requirements identified as applicable to luminaires and low voltage system components used submerged in or floating on ponds also apply to luminaires and low voltage system components intended for use in other bodies of water covered by Article 682 of the National Electrical Code, ANSI/NFPA 70. Further, markings, instructions, and other product specific information shall be permitted to refer to one or more bodies of water covered by Article 682 in addition to ponds or instead of ponds.

Added 1.7 effective August 7, 2009

1.8 The luminaires and low voltage system components covered by this standard are not suitable for use in swimming pools, spas, other bodies of water intended to contain immersed persons, or permanent fountains covered by Part V of Article 680 of the National Electrical Code, ANSI/NFPA 70. Luminaires intended for use in these locations are covered by the Standard for Underwater Luminaires and Junction Boxes, UL 676. Fountains covered by Part V of Article 680 of the National Electrical Code, ANSI/NFPA 70 are permanent, not self-contained, not portable, or exceed 5 feet (1.5 m) in any dimension.

Added 1.8 effective August 7, 2009

Documents
Document Sharing Hub

Full document details: UL 1838 2009

1.9 Fluorescent and high intensity discharge lighting systems will be investigated in accordance with the applicable requirements in this standard and with the applicable requirements in the Standard for Luminaires, UL 1598, as intended.

1.9 added August 7, 2007

2 Glossary

2.1 For the purpose of this standard, the following definitions apply.

2.2 ACCESSIBILITY BARRIER – A material provided to restrict access to:

a) Uninsulated current carrying parts; and

b) Current carrying parts insulated with materials not intended to be subject to user contact. All or part of the barrier is able to serve as an enclosure.

2.2.1 CLASS 1 WIRING METHODS – Wiring methods specified in Chapter 3 of the National Electrical Code, ANSI/NFPA 70.

2.2.1 added August 7, 2007

2.2.2 CLASS 2 CIRCUIT – A circuit supplied by either (a) a transformer complying with the construction and performance requirements for Class 2 transformers in the Standard for Low Voltage Transformers – Part 1: General Requirements, UL 5085-1 and the Standard for Low Voltage Transformers – Part 3: Class 2 and Class 3 Transformers, UL 5085-3; or (b) a power unit complying with the construction and performance requirements in the Standard for Class 2 Power Units, UL 1310.

2.2.2 added August 7, 2007

2.3 COMBUSTION – Burning; or a chemical process (an oxidation) accompanied by the evolution of light and heat. Examples of combustion are any blackening or disintegration, glowing, flaming, or charring of any material or test indicator such as tissue paper, cheesecloth, or wood.

2.4 CONNECTOR – A generic term used to refer to an electrical fitting that:

a) Connects the luminaire to the main low voltage cable (also called line-to-luminaire connector); or

b) Is used to extend main low voltage cable (also called line-to-line connector).

2.4 revised August 7, 2007

2.5 DECORATIVE PART – A part of a product that is present for ornamental purposes only. The product shall meet the requirements of this standard when the decorative part is provided, removed, damaged, or deteriorated to any extent.

2.5 revised August 7, 2007

2.6 ELECTRICAL FITTING – Any device that supports or encloses uninsulated current carrying parts.

2.7 ELECTRONIC POWER UNIT – Equipment that powers and controls the lamps used for a landscape lighting system and consists of electronic circuits to isolate the secondary from the primary circuit and reduce voltage and limit available power.

2.7 revised August 7, 2007

Documents
Document Sharing Hub
Full document details: UL 1838 2009

2.8 ENCLOSURE – A material provided to enclose electrical parts and components that involves a risk of fire. All or part of the enclosure serves as an accessibility barrier.

2.9 LANDSCAPE LIGHTING SYSTEM – The system consisting of the power unit, luminaire, luminaire fittings, and wiring. See Figure 2.1 for a diagram of a typical landscape lighting system.

2.9 revised August 7, 2007

Figure 2.1
Typical landscape lighting system

Figure 2.1 revised August 7, 2007

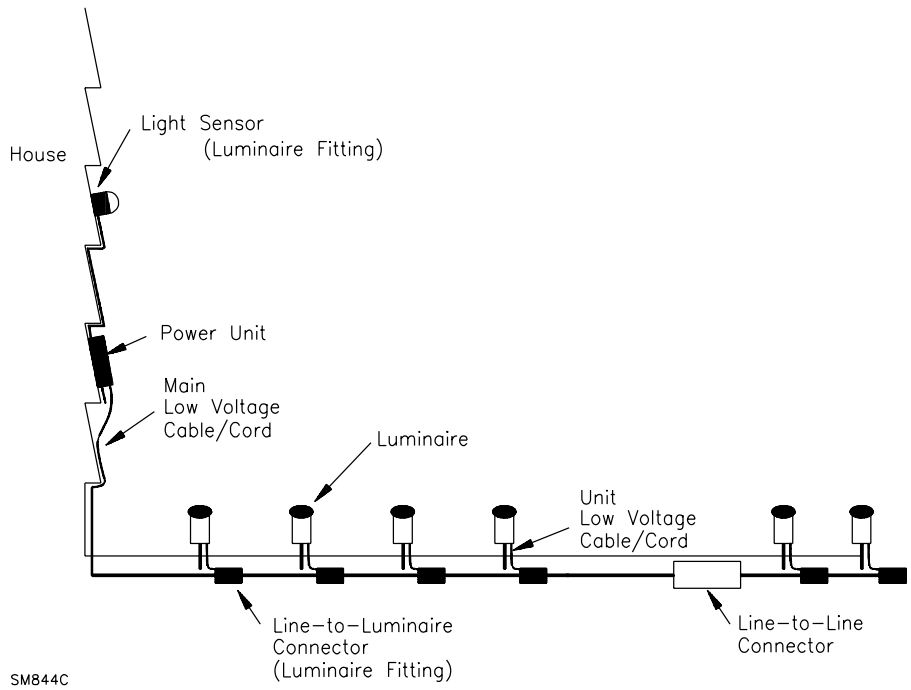

2.10 LIVE PART – A conductive part without basic insulation, where a risk of electric shock exists. The neutral conductor is determined to be a current carrying part.

2.11 LUMINAIRE – An assembly that consists of the lamps, enclosures, mounting means, luminaire fittings, and the means of connection to unit low voltage cable or the main low voltage cable.

2.11 revised August 7, 2007

2.12 LUMINAIRE FITTING – An individual component or accessory that is provided with a luminaire or that is electrically or mechanically connected to the power unit.

2.13 OPEN HOLE – An aperture in an enclosure that is not covered or filled by another part. Typically, open holes relate to:

a) Ventilation;

b) Apertures provided for several different constructions that are left unused; and

c) An uncovered aperture provided for making supply connections.

Documents
Document Sharing Hub
Full document details: UL 1838 2009

2.14 OPENING – An aperture in an enclosure that is covered or filled by a plug or knockout and that has the potential of becoming an open hole. Typically, openings relate to supply connections and accessibility for inspection of splices.

2.14.1 POND AND SMALL DECORATIVE FOUNTAIN LUMINAIRES AND FITTINGS – Luminaires and fittings intended for underwater or floating use in ponds or small decorative fountains as specified in 1.6 – 1.8.

Added 2.14.1 effective August 7, 2009

2.15 POWER UNIT – The equipment that powers and controls the lamps used for the landscape lighting system. A power unit consists of one or more of the following:

a) Transformer or solid-state circuitry to isolate the output circuit from the primary input circuit, reduce voltage and limit available power;

b) Timers, switches, sensors, or similar devices to control the lighting; and

c) Integral overcurrent protection.

2.15 revised August 7, 2007

2.16 RISK OF ELECTRIC SHOCK – See Section 2A.

Revised 2.16 effective August 7, 2009

2.17 SCREW, SHEET-METAL – A screw with threads having a pitch such that thinner sheet metal is able to be secured by physical fit between successive threads. Self-tapping screws are also known as sheet-metal screws.

2.18 SCREW, THREAD-FORMING – A screw with a tapered end that is criss-cross stamped as shown in Figure 2.2. When screwed into an open hole, the screw forces the sheet-metal around the open hole to expand and form threads. A thread-forming screw will not necessarily follow the same threads if reinserted into the same opening.

Documents
Document Sharing Hub
Full document details: UL 1838 2009

Figure 2.2
Thread-forming screw

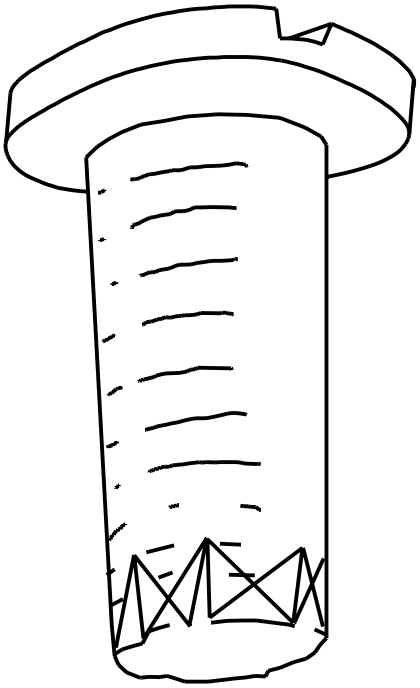

SM359

2.19 SECONDARY WIRING – Wiring connecting the output of the power unit to the luminaire, including the main low voltage cable and the unit low voltage cable.

2.19 revised August 7, 2007

2.19.1 SMALL DECORATIVE FOUNTAIN – A decorative, portable, self-contained fountain.

Added 2.19.1 effective August 7, 2009

2.20 SPLICE – Any point where one wire is connected to another wire. A wire terminating at a pressure wiring terminal or wire binding screw is not determined to be a splice.

2.21 TERMINAL, INSULATION PIERCING – A terminal having a contact pin that punctures the conductor insulation and is inserted into strands of the conductor. Also an insulation displacement terminal where the insulation is cut and the conductor is positioned between the pins of the terminal.

2.21 revised August 7, 2007

2.22 WATER BARRIER – All parts such as a lens, luminaire body, gasket, or sealant/adhesive material that are in contact with water under normal use conditions and that, if compromised, would allow water to reach live part locations not intended to be wet. A water barrier includes a part not directly isolating water from a dry location but that is relied upon for water barrier integrity, such as a bezel or face/trim ring that bears against a lens that, in turn, bears against/compresses a gasket.

2.22 added August 7, 2007

Documents
Document Sharing Hub

Full document details: UL 1838 2009

2A Electric Shock

Added 2A effective August 7, 2009

2A.1 A live part is considered to pose a risk of electric shock when the voltage potential between the part and earth ground or any other accessible part exceeds the values specified in Table 2A.1 and Figure 2A.1 and the current that conducts through a non-inductive 500 ohm resistance exceeds the values specified in Table 2A.2 and Figure 2A.2. A live part is not considered to pose a risk of electric shock where either the voltage potential or current is less than the values specified in the Tables and Figures.

Table 2A.1
Maximum voltage considered not a risk of electric shock, and the maximum permitted output circuit voltage for landscape lighting systems

	Voltage type	Maximum Voltage
1.	Sinusoidal, ac	15 V, rms
2.	Nonsinusoidal, ac	21.2 V, peak
3.	Pure dc[a]	30 V
4.	DC interrupted at a rate of 10 to 200 Hertz	12.4 V, peak
5.	Combinations of dc and sinusoidal ac at frequencies not greater than 100 Hertz	See Figure 2A.1

[a] dc output voltage generated by an electronic power unit is considered to be pure dc only if it is confirmed through test that the peak-to-peak value of ripple voltage is not more than 0.17 percent of the dc voltage.

Figure 2A.1
Maximum voltage for combinations of dc and sinusoidal ac voltage at frequencies not greater than 100 hertz

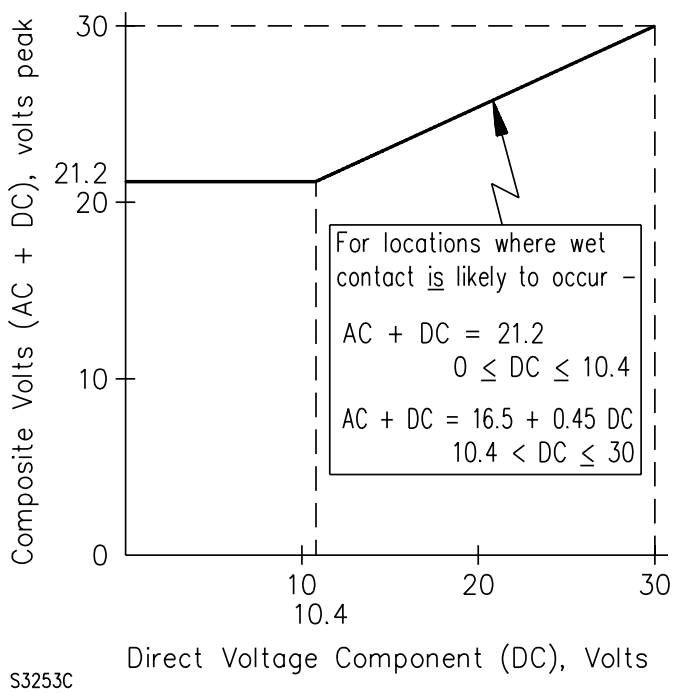

Documents
Document Sharing Hub
Full document details: UL 1838 2009

Table 2A.2
Maximum current considered not a risk of electric shock

Current Wave Form Type		Maximum Current
1.	Sinusoidal, ac	5 mA, rms
2.	Nonsinusoidal, ac	7.1 mA, peak
3.	Pure dc[a]	30 mA
4.	Combinations of dc and sinusoidal ac at frequencies not greater than 100 Hertz	See Figure 2A.2.

[a] dc current generated by an electronic power unit is considered to be pure dc only if it is confirmed through test that the peak-to-peak value of ripple in the current is not more than 0.17 percent of the dc current.

Documents
Document Sharing Hub
Full document details: UL 1838 2009

Figure 2A.2
Maximum current for combinations of dc and sinusoidal ac current at frequencies not greater than 100 hertz

Revised Figure 2A.2 effective August 7, 2009

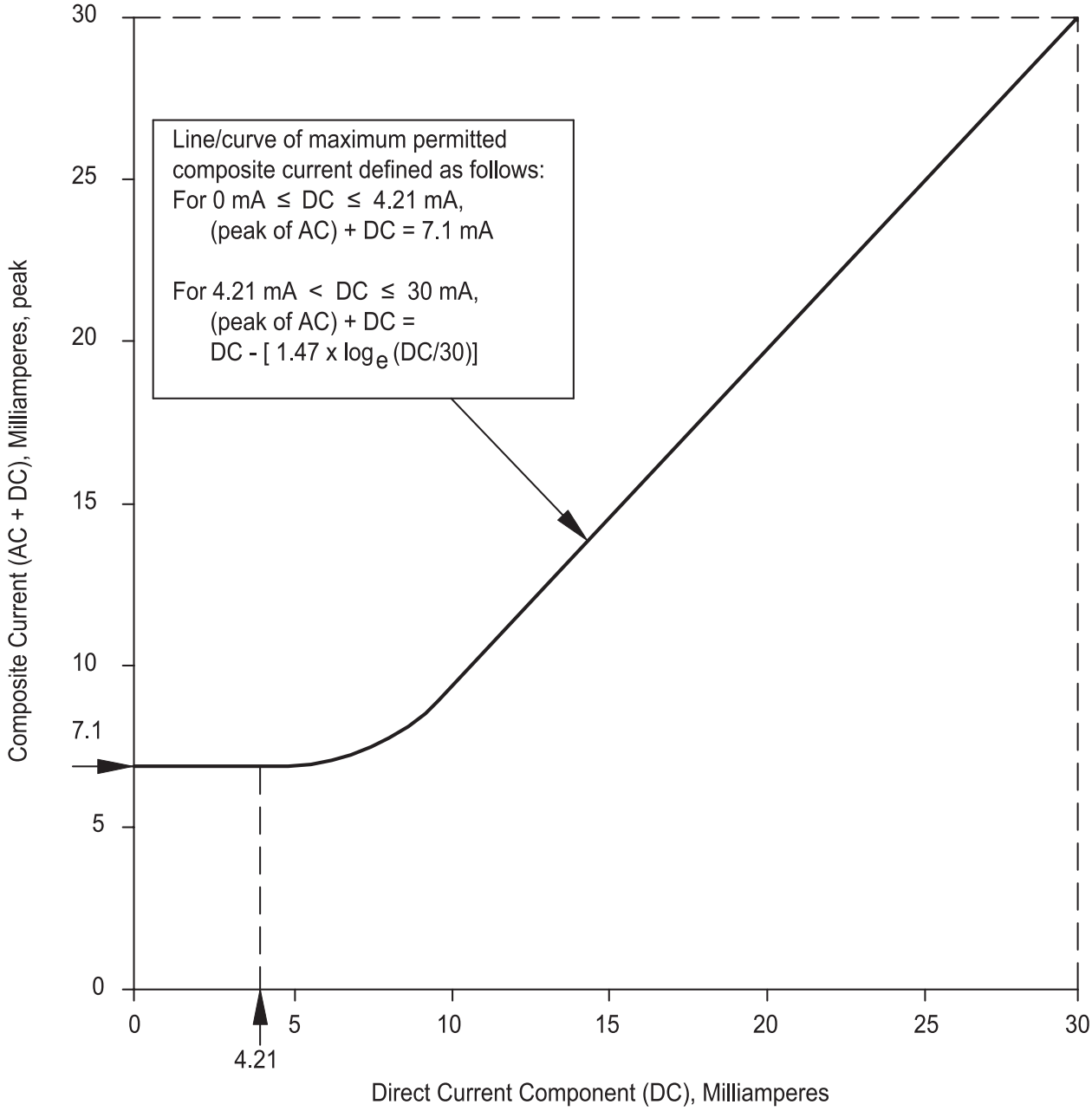

su0145

Documents
Document Sharing Hub
Full document details: UL 1838 2009

3 Components

3.1 Except as indicated in 3.2, a component of a product covered by this standard shall comply with the requirements for that component. See Appendix A for a list of standards covering components used in the products covered by this standard.

3.2 A component is not required to comply with a specific requirement that:

a) Involves a feature or characteristic not required in the application of the component in the product covered by this standard, or

b) Is superseded by a requirement in this standard.

3.3 A component shall be used in accordance with its rating established for the intended conditions of use.

3.4 Specific components are incomplete in construction features or restricted in performance capabilities. Such components are intended for use only under limited conditions, such as certain temperatures not exceeding specified limits, and shall be used only under those specific conditions.

4 Units of Measurement

4.1 Values stated without parentheses are the requirement. Values in parentheses are explanatory or approximate information.

4.2 Unless indicated otherwise all voltage and current values mentioned in this standard are root mean square (rms).

5 Undated References

5.1 Any undated reference to a code or standard appearing in the requirements of this standard shall be interpreted as referring to the latest edition of that code or standard.

6 Organization and Application

6.1 The standard is organized as follows:

Introduction – This covers general statements and requirements necessary to apply the requirements in the standard.

Part 1 – This part covers the construction, performance, and marking requirements for all power units.

Part 2 – This part covers equipment, including luminaires, low voltage cables, and other system components connected to the output circuit of a power unit.

Part 3 – This part covers luminaires that use tungsten halogen lamps.

Part 4 – This part covers luminaires for ponds and small decorative fountains.

Documents
Document Sharing Hub

Full document details: UL 1838 2009

6.2 A power unit submitted for investigation will be investigated to the requirements in Part 1. A luminaire and other output circuit system components submitted for investigation will be investigated to the requirements in Part 2 and if applicable, Part 3. A complete landscape lighting system will be investigated to the requirements in Parts 1 and Part 2 and if applicable, Part 3.

6.2 revised August 7, 2007

6.3 A power unit shall be intended for use in one of the following locations:

a) Indoor use only – A power unit marked for use indoors (see 50.12) only need not comply with the outdoor use construction and performance requirements but must be marked with the word ″WARNING″ and the following or equivalent wording ″Risk of Fire. Installation involves special wiring methods to run wiring through a building structure. Consult a qualified electrician.″ There shall be no literature, carton markings, or illustrations depicting or implying outdoor installation of the power unit. The power unit also needs to be provided, for all output circuits, with a means for connecting a Class 1 wiring method and for connecting SPT-3 or equivalent main low voltage cable.

b) Outdoor use only – A power unit marked for outdoor use only (see 50.13) shall not be provided with any literature, carton markings, or illustrations depicting or implying indoor use.

c) Indoor/outdoor use – A power unit marked for indoor/outdoor use (see 50.14) is allowed to be installed outdoors or indoors. It shall comply with all of the construction and performance requirements for wet use and shall be marked with the word ″WARNING″ and the following or equivalent wording ″Risk Of Fire. If installation involves running wiring through a building structure, special wiring methods are needed. Consult a qualified electrician.″ The power unit also needs to be provided, for all output circuits, with a means for connecting a Class 1 wiring method for each output circuit and for SPT-3 or equivalent main low voltage cable.

6.3 revised August 7, 2007

PART 1 – POWER UNITS

MECHANICAL CONSTRUCTION

7 General

7.1 Sheet metal screws and thread forming screws with screw threads as shown in Figure 2.2 shall not be used to secure electrical parts or enclosure components in place or together when the screw threads contact only sheet aluminum, copper, or aluminum or copper alloys.

Exception No. 1: A sheet metal screw or thread forming screws are able to be used if intended results are observed during the test described in 39.1.

Exception No. 2: A sheet metal screw or thread forming screw is able to pass through sheet aluminum, copper, or aluminum or copper alloys if it then threads into steel having a minimum thickness as specified in 9.1.

Exception No. 3: A sheet metal screw is able to be used for mounting or support of a part (such as a transformer or decorative part) if the part weighs less than 7-1/2 pounds (3.4 kg).

Documents
Document Sharing Hub
Full document details: UL 1838 2009

7.2 The method of making a joint between metal parts and of fastening arms and supports, shall provide strength and rigidity and prohibit turning that results in movement of wires or wiring devices after the assembly is completed. If wires passing through the joint are concealed, the joint shall be so designed that rotation is 360 degrees or less.

7.3 With regard to 7.2, friction alone between parts shall not be the means to prohibit turning more than 360 degrees. Turning shall be prohibited by:

a) The use of a lock washer, properly applied;

b) A locknut seated against another nut or metal surface; or

c) By some other positive mechanical method where two parts mate by interference fit.

7.4 Components shall be secured by a means other than friction.

7.5 An adhesive used to secure components or the enclosure shall comply with the requirements in the Standard for Polymeric Materials – Use in Electrical Equipment Evaluations, UL 746C.

Exception: Solvent bonding is able to be used without complying with UL 746C.

7.6 Direct plug-in power units shall comply with the requirements for moment and weight in the Standard for Class 2 Power Units, UL 1310.

Documents
Document Sharing Hub

Full document details: UL 1838 2009

No Text on This Page

Documents
Document Sharing Hub

Full document details: UL 1838 2009

8 Enclosures

8.1 All splices, transformers, current carrying parts or devices with current carrying parts that are not enclosed, and all leads or terminals for field connection of supply wires shall be enclosed in material specified in 8.2.

8.2 An enclosure specified in 8.1 shall be constructed of metal or a polymeric material that complies with the requirements for stationary equipment in the Standard for Polymeric Materials – Use in Electrical Equipment Evaluations, UL 746C. The minimum thickness for metal shall be as specified in Metal Thickness, Section 9. If the enclosure is constructed of polymeric material, compliance with Section 40, Polymeric Enclosure Conduit Connection Tests is required.

8.3 An enclosure shall be provided with integral mounting means and shall be so constructed as to prohibit the wetting of current carrying parts in circuits over 15 volts or electrical components or wiring not specified for use in contact with water, and to reduce the risk of electric shock due to weather exposure. Parts specified for use in contact with water include flexible cords marked in accordance with 24.4.1, liquid tight flexible metal conduit, outlet boxes marked for use in wet locations, rigid conduit, and similar parts.

Exception: A power unit marked for indoor use only is not required to comply with this requirement.

8.4 To determine compliance with 8.3, a complete power unit is to be subjected to the tests specified in Weather Tests, Section 37.

9 Metal Thickness

9.1 Sheet metal

9.1.1 The thickness of sheet metal in a power unit, other than at openings for conduit connection, shall be no less than 0.020 inch (0.51 mm) for uncoated steel, 0.023 inch (0.58 mm) for zinc coated steel, and 0.025 inch (0.64 mm) for copper, brass, zinc, or aluminum.

Exception: The thickness of metal is not specified for:

a) A purely ornamental part; or

b) Any part not required to serve as the enclosure, provided structural integrity, or act as support of a wiring device.

9.1.2 At openings for conduit connection, the minimum metal thickness shall be 0.032 inch (0.81 mm) for uncoated steel, 0.034 inch (0.86 mm) for zinc coated steel, and 0.040 inch (1.02 mm) for copper, brass, zinc, or aluminum.

9.1.3 The values for minimum thickness indicated in 9.1.1 apply to measurements made on a formed part prior to the application of paint, varnish, or similar applications.

Documents
Document Sharing Hub
Full document details: UL 1838 2009

9.2 Extrusions

9.2.1 An extruded metal part shall comply with the thickness requirements for sheet metal as described in 9.1.1.

9.3 Cast metal

9.3.1 The minimum thickness of cast metal shall be in accordance with Table 9.1.

Table 9.1
Minimum acceptable thickness of cast metal

Metal	At un-reinforced areas exceeding 35 square inches (226 cm^2)		At all other areas	
	Inch	(mm)	Inch	(mm)
Die-cast metal	5/64	2.0	3/64	1.2
Cast malleable iron or permanent mold cast aluminum	3/32	2.4	1/16	1.6
Other cast metal	1/8	3.2	3/32	2.4

10 Corrosion Protection

10.1 The inside and outside surfaces of cast ferrous metal, sheet steel, or ferrous tubing shall be protected against corrosion by one of the coatings described in Table 10.1.

Exception No. 1: Other finishes, including paints, special metallic finishes and combinations of the two that have, by comparative tests with galvanized sheet steel conforming with designation (A) Type G90 of Table 10.1, indicated they provide equivalent protection, are able to be used.

Exception No. 2: A metal part, such as a decorative part, that is not required for conformance with this standard need not be protected against corrosion.

Exception No. 3: Stainless steel need not be additionally protected against corrosion.

Exception No. 4: Edges, fasteners, and welds complying with 10.2, 10.3, 10.4, and 10.5 need not be additionally protected against corrosion.

Exception No. 5: If the inside surfaces on the power unit are protected from the elements such that no water enters the unit during the Weather Tests described in Section 37, the inside surfaces are able to be provided with corrosion protection equivalent to that specified in 10.2.

Exception No. 6: A power unit marked for indoor use only need not comply with this requirement.

10.2 Hinges, bolts, and fasteners made of ferrous materials shall be protected against corrosion by zinc coating, cadmium plating, enameling, painting, or be provided with equivalent protection against corrosion on all surfaces.

Exception No. 1: Hinge pins need not be provided with corrosion protection.

Exception No. 2: A power unit marked for indoor use only need not comply with this requirement.

Documents
Document Sharing Hub
Full document details: UL 1838 2009

10.3 Sheet steel or other metal that is painted to comply with 10.2 shall be properly cleaned of grease and similar products prior to painting.

10.4 Punched holes and cut edges in ferrous material need not be corrosion protected.

10.5 Welds in iron or steel (other than stainless steel) shall be painted with one coat of any outdoor paint.

Exception No. 1: A power unit marked for indoor use only need not comply with this requirement.

Exception No. 2: One coat of any indoor paint is allowed over a spot weld on galvanized steel.

Table 10.1
Sheet steel coatings

Type of coating	Type or thickness[a] Inches	(mm)	Description
(A) Hot-dipped mill galvanized steel	G90[b]		–
	G60[b]		with 1 coat of outdoor paint[c]
	A60[b]		with 1 coat of outdoor paint[c]
(B) Zinc coating other than Type (A)	0.00061	(0.0155)[d]	–
	0.00041	(0.0104)[d]	with 1 coat of outdoor paint[c]
(C) Cadmium coating	0.0010	(0.0254)	–
	0.00075	(0.01905)	with 1 coat of outdoor paint[c]
	0.0005	(0.0127)	with 2 coats of outdoor paint[c]
(D) Vitreous enamel[e]	–		–
(E) Organic coatings[f]	–		–

[a] As determined by ASTM Method B555, Guidelines for Measurement of Electrodeposited Metallic Coating Thicknesses by the Dropping Test.

[b] Conforming with the coating designation G90, G60, or A60 in Table 1 of ASTM A525, Specification for Sheet Steel, Zinc-Coated (Galvanized) by the Hot Dip Process, General Requirements, with no less than 40 percent of the zinc on any side based on the minimum single spot test requirement in this ASTM standard.

[c] Labeled as outdoor paint by paint manufacturer.

[d] Average thickness with a spot minus tolerance of 0.00007 inch (0.00178 mm).

[e] Sheet steel rated at least 0.026 inch (0.66 mm) thick.

[f] Complying with the Standard for Organic Coatings for Steel Enclosures for Outdoor Use Electrical Equipment, UL 1332.

Documents
Document Sharing Hub
Full document details: UL 1838 2009

11 Open Holes

11.1 An open hole in an enclosure shall not exceed the dimensions specified in Table 11.1.

Exception: An open hole need not comply with Table 11.1 if an articulate probe as specified in Figure 11.1 does not contact uninsulated current carrying parts and the power unit complies with the Component Fault Test described in Section 43.

Table 11.1
Maximum size of open holes

Opening shape	Dimension		Maximum area	
	inch	(mm)	in^2	(cm^2)
Slot[a]	3/8 (width)	9.6	1-1/2	9.68
Square	1/2 (side)	12.7	–	–
Round	1/2 (diameter)	12.7	–	–
Irregular	3/8	9.6	1-1/2	9.68

[a] An open hole between two assembled parts that does not exceed 1/32 inch (0.8 mm) need not comply with the area dimensions.

Documents
Document Sharing Hub
Full document details: UL 1838 2009

Figure 11.1
Articulate with web stop

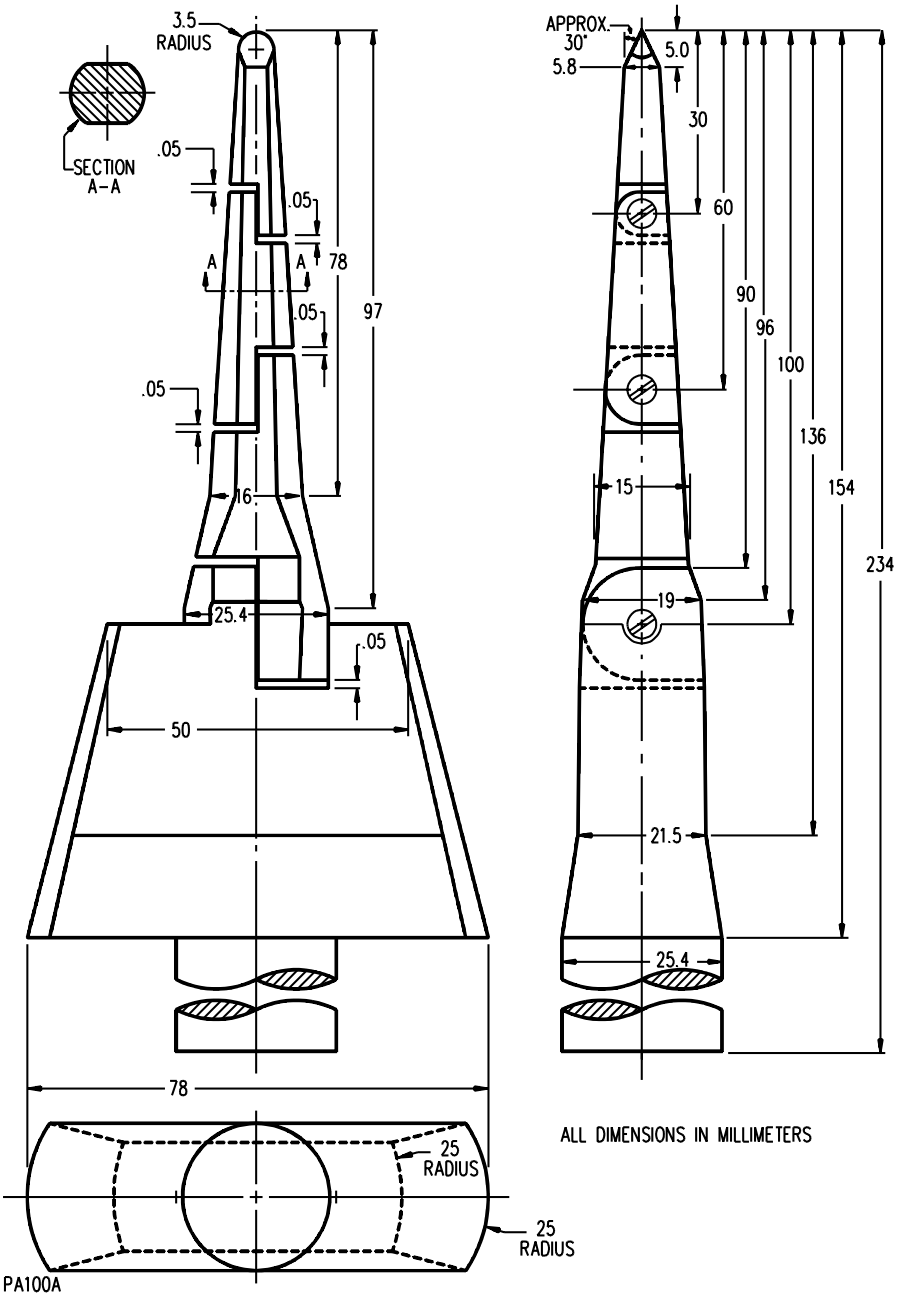

NOTES:

The UL articulate probe without the web stop is able to be used for openings having a minor dimension less than 3/4 inch (19.1 mm).

High impact polystyrene articulate probes available from Underwriters Laboratories Inc.

Documents
Document Sharing Hub
Full document details: UL 1838 2009

11.2 The requirements of this section do not apply to drain holes, which are addressed in Drain Holes, Section 12.

11.3 The total area of one or more open holes shall be no more than 15 percent of the area of the surface in which the hole or holes are located. This includes a wiring compartment or integral outlet box compartment.

Exception: This requirement does not apply if the power unit complies with the impact test described in Impact Test on Units With Open Holes, Section 42 and with the Component Fault Test described in Section 43.

11.4 An enclosure containing a fuse mounted in an open type fuseholder shall have no open holes.

12 Drain Holes

12.1 An open drain hole shall be provided on all power units to prohibit the accumulation of water above a level that results in the wetting of an electrical part or opening for the connection of conduit or for an auxiliary part. The hole shall be as specified in Table 12.1.

Exception No. 1: A power unit that has been subjected to the Weather Tests as required in Section 37 need not be provided with a drain hole if no water enters the enclosure.

Exception No. 2: A ground mounted power unit shall not be provided with a drain hole.

Exception No. 3: A power unit marked for indoor use only need not comply with this requirement.

Table 12.1
Size of drain holes

Opening shape	Minimum dimension		Minimum area		Maximum dimension		Maximum area	
	Inch	(mm)	Inch^2	(mm^2)	Inch	(mm)	Inch^2	(cm^2)
Slot	1/8 (width)	3.2	0.012	7.74	3/8 (width)	1-1/2	1-1/2	9.68
Square	1/8 (side)	3.2	–	–	1/2 (side)	12.7	–	–
Round	1/8 (diameter)	3.2	–	–	1/2 (diameter)	12.7	–	–
Irregular	–	–	0.012	7.74	–	–	1-1/2	9.68

Documents
Document Sharing Hub
Full document details: UL 1838 2009

13 Openings

13.1 A knockout shall be secured in place so that it is removed readily without distortion of the enclosure, but will remain in place during normal handling as determined in Tests on Knockouts, Section 41.

14 Gaskets and Bushings

14.1 A gasket or bushing shall comply with the requirements of the thermal conditioning test described in 37.7.1 – 37.7.3.

Exception: Neoprene rubber meets the intent of the requirement for 60°C (140°F) and silicone rubber meets the intent of the requirement for 105°C (221°F) without being subjected to an investigation.

14.2 A gasket shall be so secured that intended use will not cause the gasket to loosen. Clips or a clamping ring are allowed as the means of securement. An adhesive or other means shall be investigated.

14.3 If an adhesive is used to secure a gasket as described in 14.2, the gasket assembly shall comply with the gasket adhesion test described in 37.8.1.

ELECTRICAL CONSTRUCTION

15 General

15.1 Class 2 Circuits Within Power Unit

Revised 15.1 effective August 7, 2009

15.1.1 Except as specified in 15.1.2 and except for compliance with the requirements identified in items (a), (b), and (c) below, components of a Class 2 Circuit within the power unit enclosure are not required to comply with the requirements in PART 1 of this standard.

a) Separation of Circuits, Section 22;

b) Electrical Spacings, Section 23; and

c) Dielectric Voltage Withstand Test, Section 32.

Revised 15.1.1 effective August 7, 2009

15.1.2 Components of a Class 2 circuit functioning as part of or mounted on the power unit enclosure need to comply with the applicable requirements in PART 1 of this standard.

Added 15.1.2 effective August 7, 2009

Documents
Document Sharing Hub

Full document details: UL 1838 2009

15.2 Wiring devices

15.2.1 A wiring device (a switch, fuseholder, lampholder, or similar wiring device) shall be prohibited from any turning, by a means as specified in 7.2 and 7.3, that does not apply tension to splices or other wiring connections, cause damage to the wiring, or otherwise adversely affect the assembly.

15.3 Internal wiring connections

15.3.1 A soldered lead shall be mechanically secured at the point of connection before soldering, or shall be welded in place.

15.3.2 With respect to the requirement in 15.3.1, a lead is determined to be mechanically secured when one or more of the following is provided:

a) At least one full wrap around a terminal;

b) At least one right angle bend when passed through an eyelet or opening; or

c) The lead is twisted with other conductors.

15.3.3 Other types of wiring connections that provide for a secure connection are allowed.

15.4 Insulation

15.4.1 Nonabsorptive electrical insulation shall be used in the construction of electrical components where it is relied upon to provide electrical spacings or sole support of live electrical parts or as electrical insulation. Untreated fiber and similar products, are examples of materials that shall not be used; while treated cellulosic fiber, phenolic, urea, porcelain, and similar products, are materials that meet the intent of the requirements. Other materials relied upon as electrical insulation shall comply with the insulation requirements in the Exposure to Ultraviolet Light Test in the Standard for Polymeric Materials – Use in Electrical Equipment Evaluations, UL 746C.

15.4.2 Coil insulation, unless inherently moisture resistant, shall be treated to render it resistant to moisture by a coating, varnish, or similar treatments.

Documents
Document Sharing Hub

Full document details: UL 1838 2009

15.5 Prevention of wire damage

15.5.1 A power unit shall be so designed that wires are able to be pulled through, or the power unit otherwise wired, without damaging the coverings of insulation on the conductors. A wire enclosure shall be free from burrs, fins, and other sharp edges that come in contact with wires.

15.5.2 Threads of sheet metal and self-tapping screws shall not be exposed in a wiring enclosure for a distance of more than 3/16 inch (4.8 mm).

Exception: Wires that are held away from or positioned away from such screw threads are not prohibited from being within 3/16 inch (4.8 mm) of the threads.

15.5.3 When a conductor passes through an opening or crosses over the edge of metal, it shall be held away from contacting the edges or be protected from cutting and abrasion. Sleeving shall not be used as a means of prohibiting cutting and abrasion of wires.

15.5.4 For sheet metal less than 0.042 inch (1.07 mm), protection shall be provided by one of the following methods:

a) Rolling of the edge of metal by at least 120 degrees; or

b) A bushing or grommet of a material other than rubber of a minimum thickness of 0.047 inch (1.2 mm).

Documents
Document Sharing Hub

Full document details: UL 1838 2009

No Text on This Page

Documents
Document Sharing Hub

Full document details: UL 1838 2009