UL 1917

STANDARD FOR SAFETY

Solid-State Fan Speed Controls

Documents
Document Sharing Hub

Provided by IHS under license with UL

No reproduction or networking permitted without license from IHS
Full document details: UL 1917 2013

Licensee=North Carolina State Univ/5618801100
Not for Resale, 12/07/2014 22:58:08 MST

UL COPYRIGHTED MATERIAL –
NOT AUTHORIZED FOR FURTHER REPRODUCTION OR
DISTRIBUTION WITHOUT PERMISSION FROM UL

Documents
Document Sharing Hub

Provided by IHS under license with UL

No reproduction or networking permitted without license from IHS

Licensee=North Carolina State Univ/5618801100
Not for Resale, 12/07/2014 22:58:08 MST

Full document details: UL 1917 2013

UL Standard for Safety for Solid-State Fan Speed Controls, UL 1917

Fourth Edition, Dated July 3, 2013

Summary of Topics

The new edition dated July 3, 2013 was issued to reflect the recent ANSI approval, incorporate minor editorial changes, some clarifications, organizational changes, renumbering changes, and the addition of the Abnormal Switching Test in Clause 27.2.

The revised requirements are substantially in accordance with Proposal(s) on this subject dated March 22, 2013.

All rights reserved. No part of this publication may be reproduced, stored in a retrieval system, or transmitted in any form by any means, electronic, mechanical photocopying, recording, or otherwise without prior permission of UL.

UL provides this Standard ″as is″ without warranty of any kind, either expressed or implied, including but not limited to, the implied warranties of merchantability or fitness for any purpose.

In no event will UL be liable for any special, incidental, consequential, indirect or similar damages, including loss of profits, lost savings, loss of data, or any other damages arising out of the use of or the inability to use this Standard, even if UL or an authorized UL representative has been advised of the possibility of such damage. In no event shall UL's liability for any damage ever exceed the price paid for this Standard, regardless of the form of the claim.

Users of the electronic versions of UL's Standards for Safety agree to defend, indemnify, and hold UL harmless from and against any loss, expense, liability, damage, claim, or judgment (including reasonable attorney's fees) resulting from any error or deviation introduced while purchaser is storing an electronic Standard on the purchaser's computer system.

The requirements in this Standard are now in effect, except for those paragraphs, sections, tables, figures, and/or other elements of the Standard having future effective dates as indicated in the note following the affected item. The prior text for requirements that have been revised and that have a future effective date are located after the Standard, and are preceded by a ″SUPERSEDED REQUIREMENTS″ notice.

UL COPYRIGHTED MATERIAL –
NOT AUTHORIZED FOR FURTHER REPRODUCTION OR
DISTRIBUTION WITHOUT PERMISSION FROM UL

Documents
Document Sharing Hub

Provided by IHS under license with UL

No reproduction or networking permitted without license from IHS
Full document details: UL 1917 2013

Licensee=North Carolina State Univ/5618801100
Not for Resale, 12/07/2014 22:58:08 MST

No Text on This Page

UL COPYRIGHTED MATERIAL –
NOT AUTHORIZED FOR FURTHER REPRODUCTION OR
DISTRIBUTION WITHOUT PERMISSION FROM UL

Documents
Document Sharing Hub

Provided by IHS under license with UL

No reproduction or networking permitted without license from IHS
Full document details: UL 1917 2013

Licensee=North Carolina State Univ/5618801100
Not for Resale, 12/07/2014 22:58:08 MST

UL 1917

Standard for Solid-State Fan Speed Controls

Prior to the first edition, the requirements for the products covered by this standard were included in the Standard for Electric Industrial Control Equipment, UL 508.

First Edition – December, 1989
Second Edition – February, 1994
Third Edition – February, 2003

Fourth Edition

July 3, 2013

This ANSI/UL Standard for Safety consists of the Fourth edition including revisions through July 3, 2013.

The most recent designation of ANSI/UL 1917 as an American National Standard (ANSI) occurred on July 3, 2013. ANSI approval for a standard does not include the Cover Page, Transmittal Pages, Title Page, or effective date information.

Comments or proposals for revisions on any part of the Standard may be submitted to UL at any time. Proposals should be submitted via a Proposal Request in UL's On-Line Collaborative Standards Development System (CSDS) at http://csds.ul.com.

UL's Standards for Safety are copyrighted by UL. Neither a printed nor electronic copy of a Standard should be altered in any way. All of UL's Standards and all copyrights, ownerships, and rights regarding those Standards shall remain the sole and exclusive property of UL.

COPYRIGHT © 2013 UNDERWRITERS LABORATORIES INC.

UL COPYRIGHTED MATERIAL –
NOT AUTHORIZED FOR FURTHER REPRODUCTION OR
DISTRIBUTION WITHOUT PERMISSION FROM UL

Documents
Document Sharing Hub

Provided by IHS under license with UL

No reproduction or networking permitted without license from IHS
Full document details: UL 1917 2013

Licensee=North Carolina State Univ/5618801100
Not for Resale, 12/07/2014 22:58:08 MST

No Text on This Page

UL COPYRIGHTED MATERIAL –
NOT AUTHORIZED FOR FURTHER REPRODUCTION OR
DISTRIBUTION WITHOUT PERMISSION FROM UL

Documents
Document Sharing Hub

Provided by IHS under license with UL

No reproduction or networking permitted without license from IHS
Full document details: UL 1917 2013

Licensee=North Carolina State Univ/5618801100
Not for Resale, 12/07/2014 22:58:08 MST

CONTENTS

INTRODUCTION

1 Scope 6
2 Glossary 7
3 Components 7
4 Units of Measurement 8
5 Undated References 8
6 General 8

CONSTRUCTION

7 Enclosure 8
7.1 General 8
7.2 Cast metal 9
7.3 Sheet metal 9
7.4 Polymeric 10
7.5 Doors and covers 10
7.6 Application of probes 12
7.7 Conduit connection 12
7.8 Bonding 12
7.9 Adjustment opening 13
8 Corrosion Protection 13
8.1 General 13
8.2 Outdoor enclosures 13
9 Mounting 13
9.1 Surface mounted 13
9.2 Wall box mounted 14
10 Direct Plug-In Devices 14
11 Switches 16
11.1 General 16
11.2 Dimmers 16
12 Live Parts 16
13 Internal Wiring 17
13.1 General 17
13.2 Routing of internal wiring 17
13.3 Clamps and guides 17
13.4 Insulating bonding and grounding conductors 17
13.5 Splices and connections 18
13.6 Splice insulation 18
14 Supply Connections – Permanently Connected Speed Controls 19
14.1 General 19
14.2 Tapped holes for conduit 19
14.3 Knockouts 19
14.4 Terminals 20
14.5 Field wiring space 21
15 Supply Connections – Cord Connected Speed Controls 21
15.1 Cords and plugs 21
15.2 Strain relief 23
15.3 Bushings 24
15.4 Receptacles 24

UL COPYRIGHTED MATERIAL –
NOT AUTHORIZED FOR FURTHER REPRODUCTION OR
DISTRIBUTION WITHOUT PERMISSION FROM UL

Documents
Document Sharing Hub

Provided by IHS under license with UL

No reproduction or networking permitted without license from IHS
Full document details: UL 1917 2013

Licensee=North Carolina State Univ/5618801100
Not for Resale, 12/07/2014 22:58:08 MST

16 Supply Connections – Direct Plug-In Devices 25
17 Spacings 25
17.1 General 25
17.2 Primary circuit spacings 26
17.3 Secondary circuit spacings 26
17.4 Limited energy 27
17.5 Battery power 27
17.6 Insulating barriers 27
18 Separation of Circuits 28
19 Grounding 29

PERFORMANCE

20 General 30
21 Temperature Test 32
22 DC Offset Voltage Test 38
23 Overload Test 38
24 Endurance Test 40
25 Dielectric Voltage-Withstand Test 41
26 Short Circuit Test 42
27 Breakdown of Components Test 43
27.1 General breakdown of components test 43
27.2 Abnormal switching test 44
28 Crush Test 45
29 Compression Test 45
30 Deflection Test 45
31 Securement of Snap-On Cover Test 46
32 Polymeric Enclosure Conduit Connection Tests 46
32.1 General 46
32.2 Pullout 47
32.3 Torque 47
32.4 Bending 47
32.5 Knockouts 48
33 Abuse Test 49
34 Strain Relief Test 49
35 Push Back Relief Test 49
36 Security of Leads Test 50
37 Terminal Torque Test 50

MANUFACTURING AND PRODUCTION TESTS

38 Dielectric Voltage-Withstand Test 50
39 DC Offset Voltage Test 52

RATINGS

40 General 52

MARKINGS

41 General Markings 53
42 Cautionary and Warning Markings 55

UL COPYRIGHTED MATERIAL –
NOT AUTHORIZED FOR FURTHER REPRODUCTION OR
DISTRIBUTION WITHOUT PERMISSION FROM UL

Documents
Document Sharing Hub

Provided by IHS under license with UL

No reproduction or networking permitted without license from IHS
Full document details: UL 1917 2013

Licensee=North Carolina State Univ/5618801100
Not for Resale, 12/07/2014 22:58:08 MST

INSTRUCTIONS

43 Details 55

Appendix A

Standards for Components. A1

UL COPYRIGHTED MATERIAL –
NOT AUTHORIZED FOR FURTHER REPRODUCTION OR
DISTRIBUTION WITHOUT PERMISSION FROM UL

Documents
Document Sharing Hub

Provided by IHS under license with UL
No reproduction or networking permitted without license from IHS
Full document details: UL 1917 2013

Licensee=North Carolina State Univ/5618801100
Not for Resale, 12/07/2014 22:58:08 MST

INTRODUCTION

1 Scope

1.1 These requirements cover solid state speed controls rated 300 volts or less, single phase, intended to be connected to 15 – 20 ampere branch circuits and intended to be installed in accordance with the National Electrical Code, ANSI/NFPA 70 and used with:

a) Fans and blowers that circulate air, such as desk, bracket, ceiling, hassock, pedestal, and utility fans;

b) Fans and blowers that ventilate air, such as attic, wall-insert, ceiling-insert, household hood- and canopy-types, and window fans;

c) Evaporative coolers;

d) Air-filtering appliances;

e) Fan-type deodorizers; and

f) Fan-type air fresheners.

1.2 Inductive-type and capacitive-type fan speed controls are also covered by these requirements.

1.3 These requirements also cover the solid state fan speed control portion of controls which include dimmers for use with lighting fixtures.

1.4 Solid state fan speed controls provided with a power supply cord, those intended for permanent connection, and direct plug-in devices are also covered by this Standard.

1.5 These requirements do not cover solid state speed controls used with air heaters incorporating fans, heating-ventilating units, or blowers comprising components of such equipment as furnaces, mechanical-refrigeration equipment, air conditioners, or direct current output applications.

1.6 These requirements do not cover solid state speed controls used with fans intended to be:

a) Used in hazardous locations as defined in the National Electrical Code, ANSI/NFPA 70;

b) Installed over solvents or chemically flammable liquids or vapors; or

c) Located in chemically corrosive environments.

UL COPYRIGHTED MATERIAL –
NOT AUTHORIZED FOR FURTHER REPRODUCTION OR
DISTRIBUTION WITHOUT PERMISSION FROM UL

Documents
Document Sharing Hub

Provided by IHS under license with UL

No reproduction or networking permitted without license from IHS
Full document details: UL 1917 2013

Licensee=North Carolina State Univ/5618801100
Not for Resale, 12/07/2014 22:58:08 MST

2 Glossary

2.1 For the purpose of this standard the following definitions apply.

2.2 CORD CONNECTED DEVICE – A device intended for connection to the power source by means of a supply cord. Such a device is intended to be moved for reasons of interchange or realignment of the units of the system.

2.3 FAN, CEILING SUSPENDED – A fan intended to be mounted to a ceiling outlet box or ceiling building structure, and whose blades rotate below the ceiling. Popularly called a paddle fan.

2.4 FAN, GENERAL PURPOSE – Any fan not considered to be a ceiling-suspended fan or any fan which has a Locked Rotor Current/Full Load Current ratio greater than 1.5.

2.5 FAN SPEED CONTROL, CAPACITIVE-TYPE – A fan speed control that uses switchable capacitors to regulate the speed of the motor.

2.6 FAN SPEED CONTROL, INDUCTIVE-TYPE – A fan speed control that uses inductors to regulate the speed of the motor.

2.7 FAN SPEED CONTROL, SEMICONDUCTOR-TYPE – A fan speed control that utilizes semiconductors to regulate the speed of the motor. See 41.12.

2.8 LEAD CONNECTED DEVICE – A device which is intended to be permanently connected to the power source. Such a device is not intended to be moved or realigned once it is installed.

3 Components

3.1 Except as indicated in 3.2, a component of a product covered by this standard shall comply with the requirements for that component. See Appendix A for a list of standards covering components generally used in the products covered by this standard.

3.2 A component is not required to comply with a specific requirement that:

a) Involves a feature or characteristic not required in the application of the component in the product covered by this standard, or

b) Is superseded by a requirement in this standard.

3.3 A component shall be used in accordance with its rating established for the intended conditions of use.

3.4 Specific components are incomplete in construction features or restricted in performance capabilities. Such components are intended for use only under limited conditions, such as certain temperatures not exceeding specified limits, and shall be used only under those specific conditions.

UL COPYRIGHTED MATERIAL –
NOT AUTHORIZED FOR FURTHER REPRODUCTION OR
DISTRIBUTION WITHOUT PERMISSION FROM UL

Documents
Document Sharing Hub

Provided by IHS under license with UL

No reproduction or networking permitted without license from IHS
Full document details: UL 1917 2013

Licensee=North Carolina State Univ/5618801100
Not for Resale, 12/07/2014 22:58:08 MST

4 Units of Measurement

4.1 Values stated without parentheses are the requirement. Values in parentheses are explanatory or approximate information.

5 Undated References

5.1 Any undated reference to a code or standard appearing in the requirements of this standard shall be interpreted as referring to the latest edition of that code or standard.

6 General

6.1 The term ″speed control″ as used in this standard refers to a solid-state speed control used with electric fans for non-industrial applications.

CONSTRUCTION

7 Enclosure

7.1 General

7.1.1 A speed control shall be provided with a complete enclosure for all live parts and all operating parts other than necessarily exposed operating parts, such as an actuating member.

Exception: An open speed control (see 20.4) intended for installation in a wall box is not required to be provided with a complete enclosure of the field wiring terminals.

7.1.2 An enclosure of a speed control shall be constructed and assembled so that it has the strength and rigidity necessary to resist the abuses to which it is likely to be subjected, without total or partial collapse resulting in a risk of fire, electric shock, or injury to persons due to reduction of spacings, loosening or displacement of parts, or other serious defects.

7.1.3 An enclosure shall be constructed so as to reduce the risk of unintentional contact with enclosed electrical devices, and to provide internal devices with protection from specified external conditions.

7.1.4 The enclosure shall be constructed such that the switchplate cover mounting means, such as mounting screws, shall not enter the interior of the speed control.

Exception: The mounting means may penetrate the interior of the speed control if the applicable evaluations defined in Sections 7 – 36 are performed with a screw having a length of 3/8 inch (9.5 mm) in place.

7.1.5 Mechanical protection shall be provided to protect components during and after installation. See Crush Test, Section 28.

UL COPYRIGHTED MATERIAL –
NOT AUTHORIZED FOR FURTHER REPRODUCTION OR
DISTRIBUTION WITHOUT PERMISSION FROM UL

Documents
Document Sharing Hub

Provided by IHS under license with UL

No reproduction or networking permitted without license from IHS
Full document details: UL 1917 2013

Licensee=North Carolina State Univ/5618801100
Not for Resale, 12/07/2014 22:58:08 MST

7.2 Cast metal

7.2.1 A cast-metal enclosure shall be at least 1/8 inch (3.2 mm) thick at every point, more than 1/8 inch thick at reinforcing ribs and door edges, and at least 1/4 inch (6.4 mm) thick at tapped holes for conduit.

Exception: Other than at plain or threaded conduit holes, malleable iron and die-cast or permanent mold cast aluminum, brass, bronze, or zinc shall be:

a) At least 3/32 inch (2.4 mm) thick for an area greater than 24 square inches (155 cm^2) or having any dimension more than 6 inches (152 mm); and

b) At least 1/16 inch (1.6 mm) thick for an area of 24 square inches or less having no dimension more than 6 inches. The area considered may be bounded by reinforcing ribs subdividing a larger area.

7.3 Sheet metal

7.3.1 The thickness of a sheet-metal enclosure shall not be less than that specified in Tables 7.1 and 7.2, except that at points to which a wiring system is to be connected, uncoated steel shall be at least 0.032 inch (0.81 mm) thick, zinc-coated steel at least 0.034 inch (0.86 mm) thick, and nonferrous metal at least 0.045 inch (1.14 mm) thick.

Exception: Enclosure thickness at points other than where a wiring system is to be connected need not comply with these thickness requirements if the enclosure complies with the requirements in Sections 29 and 30.

7.3.2 Tables 7.1 and 7.2 are based on a uniform deflection of the enclosure surface for any given load concentrated at the center of the surface regardless of metal thickness.

Table 7.1
Thickness of sheet metal for enclosures carbon steel or stainless steel

Maximum width[a]		Maximum length[b]		Minimum thickness			
				Uncoated		Metal coated	
inches	(cm)	inches	(cm)	inches	(mm)	inches	(mm)
4.0	(10.2)	Not limited					
4.75	(12.1)	5.75	(14.6)	0.020	(0.51)	0.023	(0.58)
6.0	(15.2)	Not limited					
7.0	(17.8)	8.75	(22.2)	0.026	(0.66)	0.029	(0.74)
8.0	(20.3)	Not limited					
9.0	(22.9)	11.5	(29.2)	0.032	(0.81)	0.034	(0.86)
12.5	(31.8)	Not limited					
14.0	(35.6)	18.0	(45.7)	0.042	(1.07)	0.045	(1.14)

[a] The width is the smaller dimension of a rectangular sheet metal piece that is part of an enclosure. Adjacent surfaces of an enclosure may have supports in common and be made of a single sheet.

[b] Not limited applies only if the edge of the surface is flanged at least 1/2 inch (12.7 mm) or fastened to adjacent surfaces not normally removed in use.

UL COPYRIGHTED MATERIAL –
NOT AUTHORIZED FOR FURTHER REPRODUCTION OR
DISTRIBUTION WITHOUT PERMISSION FROM UL

Documents
Document Sharing Hub

Provided by IHS under license with UL

No reproduction or networking permitted without license from IHS
Full document details: UL 1917 2013

Licensee=North Carolina State Univ/5618801100
Not for Resale, 12/07/2014 22:58:08 MST

Table 7.2
Thickness of sheet metal for enclosures aluminum, copper, or brass

Maximum width[a]		Maximum length[b]		Minimum thickness	
inches	(cm)	inches	(cm)	inches	(mm)
3.0	(7.6)	Not limited			
3.5	(8.9)	4.0	(10.2)	0.023	(0.58)
4.0	(10.2)	Not limited			
5.0	(12.7)	6.0	(15.2)	0.029	(0.74)
6.0	(15.2)	Not limited			
6.5	(16.5)	8.0	(20.3)	0.036	(0.91)
8.0	(20.3)	Not limited			
9.5	(24.1)	11.5	(29.2)	0.045	(1.14)
12.0	(30.5)	Not limited			
14.0	(35.6)	16.0	(40.6)	0.058	(1.47)

[a] The width is the smaller dimension of a rectangular piece of sheet metal that is part of an enclosure. Adjacent surfaces of an enclosure may have supports in common and be made of a single sheet.

[b] Not limited applies only if the edge of the surface is flanged at least 1/2 inch (12.7 mm) or fastened to adjacent surfaces not normally removed in use.

7.4 Polymeric

7.4.1 A polymeric electrical enclosure or a polymeric part of an electrical enclosure shall comply with the applicable requirements in the Standard for Polymeric Materials – Use in Electrical Equipment Evaluations, UL 746C, and also with the additional requirements specified in this standard.

Exception: A polymeric plug or other closure made of a material rated 5V in accordance with the Standard for Tests for Flammability of Plastic Materials for Parts in Devices and Appliances, UL 94, need not comply with UL 746C.

7.5 Doors and covers

7.5.1 A part of an enclosure, such as a door or a cover, shall be provided with a means – such as latches, locks, interlocks, or screws – for firmly securing it in place.

Exception: A snap-on cover that complies with the requirements in the Securement of Snap-On Cover Test, Section 31, is not required to have additional securing means.

7.5.2 The articulate probe illustrated in Figure 7.1 shall be used as a measuring instrument to judge the accessibility to uninsulated live parts and film-coated wire provided by openings of the cover plate and not as an instrument to judge the strength of a material; the probes shall be applied with only the minimum force necessary to determine the accessibility.

UL COPYRIGHTED MATERIAL –
NOT AUTHORIZED FOR FURTHER REPRODUCTION OR
DISTRIBUTION WITHOUT PERMISSION FROM UL

Documents
Document Sharing Hub

Provided by IHS under license with UL

No reproduction or networking permitted without license from IHS
Full document details: UL 1917 2013

Licensee=North Carolina State Univ/5618801100
Not for Resale, 12/07/2014 22:58:08 MST

Figure 7.1
Articulate probe with web stop

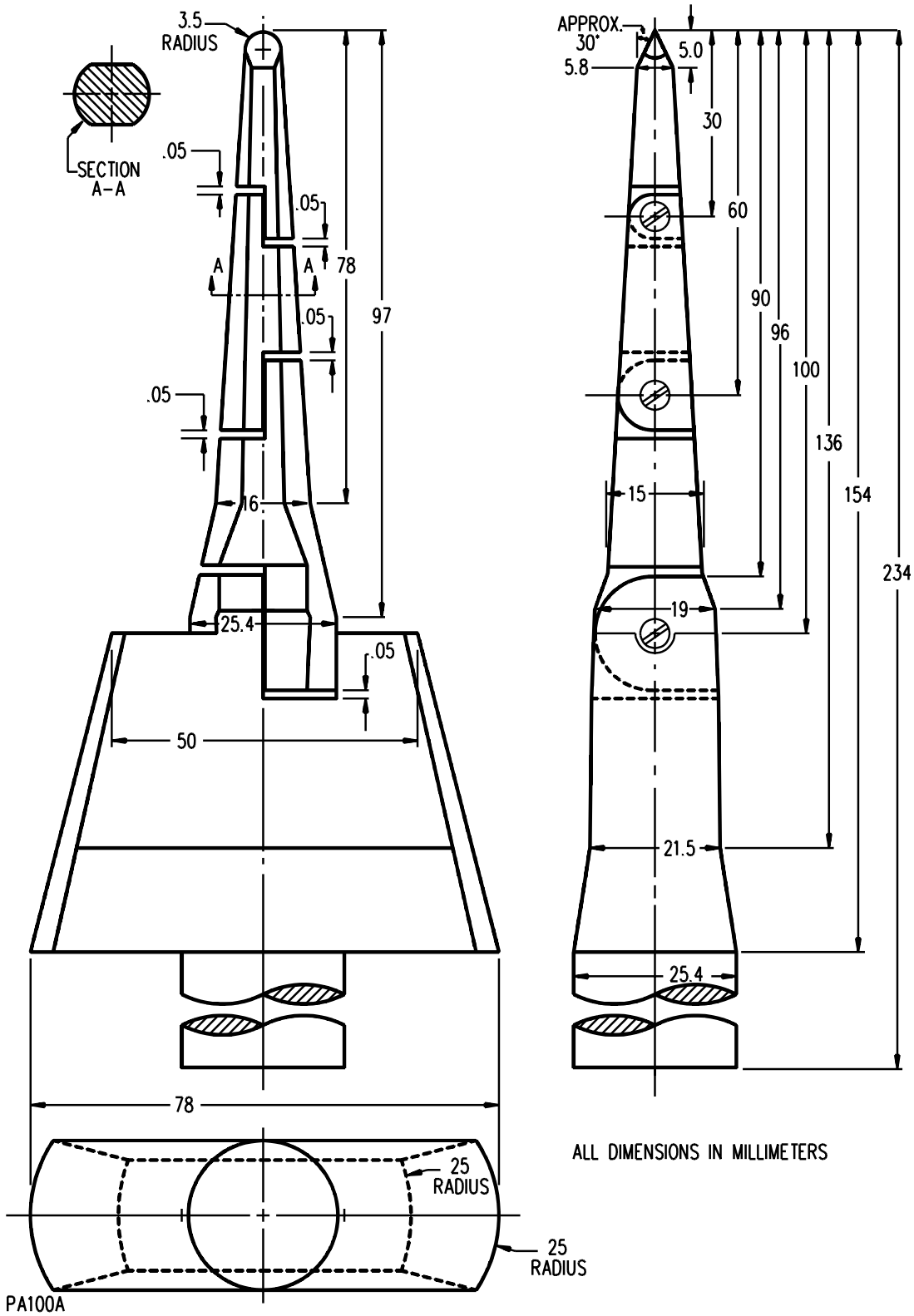

UL COPYRIGHTED MATERIAL –
NOT AUTHORIZED FOR FURTHER REPRODUCTION OR
DISTRIBUTION WITHOUT PERMISSION FROM UL

Documents
Document Sharing Hub

Provided by IHS under license with UL
No reproduction or networking permitted without license from IHS
Full document details: UL 1917 2013

Licensee=North Carolina State Univ/5618801100
Not for Resale, 12/07/2014 22:58:08 MST

7.6 Application of probes

7.6.1 The probe illustrated in Figure 7.1 shall be applied to any depth that the opening will permit and shall be rotated or angled before, during, and after insertion through the opening to any position that is necessary to try to contact an uninsulated live part or film-coated wire. The probe shall be applied in the above-described manner and in any possible configuration; and, if necessary, the configuration shall be changed after insertion through the opening. Configuration refers to positioning of the jointed portions of the probe.

7.6.2 Any part that can be contacted by the probe is judged to be accessible.

7.7 Conduit connection

7.7.1 A polymeric enclosure intended for connection to a rigid conduit system shall comply with the test requirements described in Section 32, Polymeric Enclosure Conduit Connection Tests.

7.8 Bonding

7.8.1 An enclosure made of insulating material, either wholly or in part, shall have an acceptable bonding means to provide continuity of grounding between all conduit openings. The bonding means may be either completely assembled on the product or provided as separate parts for field installation.

Exception: A bonding means is not required for the enclosure of a fan speed control that is intended to be connected to a single conduit.

7.8.2 The continuity of a conduit system shall be provided by metal-to-metal contact not relying on a polymeric material.

Exception: The continuity of the grounding system may rely on the integrity of the polymeric enclosure if samples have been subjected to the creep test requirements in the Standard for Polymeric Materials – Short Term Property Evaluations, UL 746A. Overcurrent tests shall be conducted at 200 percent of the rated current of the branch circuit-protective device.

7.8.3 A separate bonding conductor, whether in a plastic or metal enclosure, shall be copper, a copper alloy, or other material acceptable for use as an electrical conductor. Ferrous metal parts in the grounding path shall be protected against corrosion by enameling, galvanizing, plating, or other equivalent means. A separate bonding conductor shall:

a) Be protected from mechanical damage or be located within the confines of the outer enclosure or frame; and

b) Not be secured by a removable fastener used for any purpose other than bonding unless the bonding conductor is unlikely to be omitted after removal and replacement of the fastener.

7.8.4 The size of a separate component bonding conductor shall not be less than 12 AWG (2.32 mm^2) for copper and 10 AWG (2.95 mm^2) for aluminum, or the size of the conductor supplying the component, whichever is smaller.

Exception: A bonding conductor may be smaller than that specified if it complies with the bonding conductor requirements in the Standard for Industrial Control Equipment, UL 508.

UL COPYRIGHTED MATERIAL –
NOT AUTHORIZED FOR FURTHER REPRODUCTION OR
DISTRIBUTION WITHOUT PERMISSION FROM UL

Documents
Document Sharing Hub

Provided by IHS under license with UL

No reproduction or networking permitted without license from IHS
Full document details: UL 1917 2013

Licensee=North Carolina State Univ/5618801100
Not for Resale, 12/07/2014 22:58:08 MST

7.9 Adjustment opening

7.9.1 An adjustment opening shall not permit the entrance of a 1/8 inch (3.2 mm) diameter rod. If the distance between the opening and the nearest live part is more than 4 inches (102 mm), the opening shall not permit the entrance of a 1/2 inch (12.7 mm) diameter rod.

8 Corrosion Protection

8.1 General

8.1.1 Iron and steel parts shall be protected against corrosion by enameling, galvanizing, plating, or other finish that has been found by investigation to be acceptable for the purpose. This requirement applies to all enclosing cases whether of sheet steel or cast iron, and to all springs and other parts upon which proper mechanical operation may depend.

Exception: This requirement does not apply to:

a) Small parts of iron or steel, such as washers, screws, bolts, and the like, that are not current carrying, if the corrosion of such parts would not result in a risk of fire, electric shock, or injury to persons; and

b) Parts made of stainless steel that are polished or treated, if necessary.

8.1.2 If the yoke, strap, or mounting ears are made of steel, as described in 9.2.1, the corrosion protection for a fan speed control for use in a flush-device box or on an outlet-box cover shall be a zinc or cadmium coating not less than 0.00015 inch (0.0038 mm) thick in accordance with the method for determining protection against corrosion in the Standard for Metallic Outlet Boxes, UL 514A, or other coatings determined to be acceptable for the particular application.

8.2 Outdoor enclosures

8.2.1 Enclosures intended for other than indoor Type 1 use shall comply with the applicable enclosure requirements in the Standard for Enclosures for Electrical Equipment, UL 50.

9 Mounting

9.1 Surface mounted

9.1.1 Provisions shall be made for securely mounting an enclosed speed control to a supporting surface. A bolt, screw, or other part used to mount a component of the equipment shall not be used for securing the equipment to the supporting surface.

UL COPYRIGHTED MATERIAL –
NOT AUTHORIZED FOR FURTHER REPRODUCTION OR
DISTRIBUTION WITHOUT PERMISSION FROM UL

Documents
Document Sharing Hub

Provided by IHS under license with UL

No reproduction or networking permitted without license from IHS
Full document details: UL 1917 2013

Licensee=North Carolina State Univ/5618801100
Not for Resale, 12/07/2014 22:58:08 MST

9.2 Wall box mounted

9.2.1 If the fan speed control does not completely enclose the wall box, a metal yoke, strap, or mounting ear shall not be less than 0.04 inch (1.02 mm) or more than 0.09 inch (2.3 mm) thick. If a nonferrous metal is used, it shall be of sufficient thickness to provide mechanical strength and rigidity not less than that of 0.04 inch (1.02 mm) thick steel.

9.2.2 A nonmetallic yoke, strap, or mounting ear shall be of a material and design acceptable for the intended use. The nonmetallic mounting means shall not be more than 0.09 inch (2.3 mm) thick.

9.2.3 The yoke, strap, or mounting ear may be provided with extension plaster ears, which may be scored so that they can be broken off.

9.2.4 Plaster ears, whether separate pieces or integral with the mounting means, shall not carry the identifying marking or the electrical ratings of the fan speed control, unless the marking and rating also appear elsewhere on the device.

9.2.5 A screw provided for use in mounting the speed control to an outlet box or other enclosure shall project not more than 7/8 inch (22 mm) beyond the strap or cover and shall have a flat or blunt end. The end of the screw shall have no burrs, fins, or sharp edges that can damage wiring. This does not preclude thread-cleaning slots or grooves in the end of a screw.

10 Direct Plug-In Devices

10.1 A direct plug-in speed control shall have a receptacle that accepts either a polarized or grounding-type attachment plug. The blade configuration of the device shall be the same as the blade configuration that is accepted by the receptacle.

10.2 A direct plug-in speed control shall also comply with the requirements in the Abuse Test, Section 33.

10.3 The maximum acceptable moment, center of gravity, dimensions, and weight of a device shall comply with the requirements specified in (a), (b), (c), and (d). See 10.4:

a) The quotient of WY/Z shall not exceed 48 ounces (1361 g).

b) The quotient of WY/S shall not exceed 48 ounces.

c) The product of WX shall not exceed 80 ounce-inches (0.56 N·m).

d) The weight of a device shall not exceed 28 ounces (794 g).

Where:

W is the weight of the device in ounces (g).

Y is the distance illustrated in Figure 10.1 in inches (mm).

Z is the lesser of the two distances, Z_1 or Z_2, as illustrated in Figure 10.1 in inches (mm).

S is the lesser of the two distances, S_1 or S_2, as illustrated in Figure 10.1 in inches (mm).

UL COPYRIGHTED MATERIAL –
NOT AUTHORIZED FOR FURTHER REPRODUCTION OR
DISTRIBUTION WITHOUT PERMISSION FROM UL

Documents
Document Sharing Hub

Provided by IHS under license with UL

No reproduction or networking permitted without license from IHS
Full document details: UL 1917 2013

Licensee=North Carolina State Univ/5618801100
Not for Resale, 12/07/2014 22:58:08 MST

X is the greater of the two distances, X_1 or X_2, as illustrated in Figure 10.1 in inches (mm).

Figure 10.1
Dimensions of a direct plug-in device

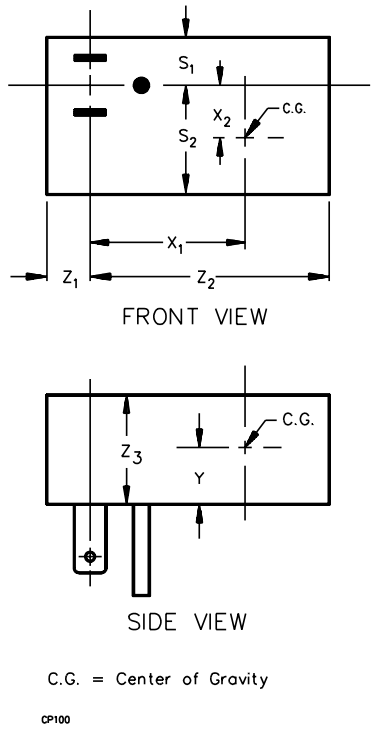

10.4 The moment and weight specified in 10.3 are to be determined as follows:

a) For devices with an output cord, the cord is to be cut off at the enclosure, or at the strain-relief means if the strain-relief means is outside the enclosure.

b) For devices with directly mounted accessories, the values are to be measured with the accessories in place.

c) A mounting tab is not to be included in measurements of the linear dimensions for the purpose of determining moments unless:

1) The tab and enclosure withstand the impacts described in 33.2 with one impact on the tab itself, without deformation, and

2) For a polymeric-enclosed device having an integral tab, the tab and enclosure do not distort at temperatures to which the material may be subjected under conditions of normal and abnormal use as determined by the mold stress-relief distortion test in the Standard for Polymeric Materials – Use in Electrical Equipment Evaluations, UL 746C.

UL COPYRIGHTED MATERIAL –
NOT AUTHORIZED FOR FURTHER REPRODUCTION OR
DISTRIBUTION WITHOUT PERMISSION FROM UL
Documents
Document Sharing Hub
Provided by IHS under license with UL
No reproduction or networking permitted without license from IHS
Full document details: UL 1917 2013
Licensee=North Carolina State Univ/5618801100
Not for Resale, 12/07/2014 22:58:08 MST