UL 1963

STANDARD FOR SAFETY

Refrigerant Recovery/Recycling Equipment

Documents
Document Sharing Hub

Full document details: UL 1963 2021

Documents
Document Sharing Hub

Full document details: UL 1963 2021

UL Standard for Safety for Refrigerant Recovery/Recycling Equipment, UL 1963

Fourth Edition, Dated June 1, 2011

Summary of Topics

This revision to ANSI/UL 1963 dated March 25, 2021 includes the following:

- ***Clarifications and addition of alternate method for evaluating protective electronic circuits and controls using requirements based on UL 60335-1; 3.12.1, 3.13, 3.14, 3.16.1, 3.16.2, 3.26.1, 3.28.1, 3.28.2, 3.28.4, 9.2.1, 17.14 – 17.18.8, 17.19.1, Table 19.2, 25.1.2.2, 27.1 – 27.6, 42.3, 42.4, 45.3, 48.1, 48.2, Section 69A, Section 74, Section 85A, Section 90A, Appendix B***

- ***Addition of requirements for remotely operated refrigerant recovery/recycling equipment; 3.18.0, 10.4.7, 14.16, Section 17A, 94.13***

- ***Update of motor-protection requirements; 19.2.1, 19.2.1.1, 19.2.3, 19.2.4***

- ***Clarify requirements for large nonmetallic exterior surface materials; Table 52.1***

- ***Alternate compliance option for EMI filters; 33.1***

- ***Alternate power supplies; 3.28.3, 3.30, 25.3.1, 25.3.3, 25.3.3.1, 25.3.4, 25.3.6, 25.4 (title), 25.4.1, 25.4.1.1, 25.4.2, 25.4.5, 25.4.7 – 25.4.9, 36.1.1, 36.2, Section 36A, Section 69B, 91.27***

- ***Addition of new capacitor standard requirements; 3.5.1, 24.1 – 24.3, 24.5 – 24.7***

- ***Gasket requirements; 9.3.8, 83.1, 83.3 – 83.4.2, 83.5, 83.6***

- ***Wiring subjected to movement; 12.1.10, Section 82A***

- ***Clarification to marking requirements; 91.1.1***

- ***Maximum operating current and maximum rated current requirements; 3.2.1, 3.2.2, 3.19.1, 3.19.2, 11.11, 12.1.2, 17.1 – 17.3, 17.11, 17.11.1, 17.13, 19.3.1, 19.3.2, 19.3.2.1, 56.3, 66.3, 66.4, 73.1.4 – 73.1.4.2, 92.2, 92.5, 92.6.1, 92.12***

- ***Refrigerant requirement revisions; 44.1 – 44.4, Section 86A, Section 90B, SB1.2***

- ***Clarifications to barrier requirements; 3.3, 3.4, 5.2.1, 7.1 – 7.2.1, 7.4, 12.1.21, 12.1.26, 12.1.27, 12.1.29, 13.1, 13.3 – 13.6, 14.2, 14.2.1, 16.2, 18.3, 18.4, 20.1, 20.1.1, 41.9, Table 52.1, Table 57.1, A7.2***

- ***Miscellaneous clarifications; 10.1.1, 5.3.1, 5.3.1.1, Table 52.1, 52.3.1, 52.3.2, 73.1.6, 76.8, 76.8.1, A52.3.1***

- ***Revisions for hose assembly requirements for flammability for class 2 and class 3 refrigerants; SB4.1 (title), SB4.1.1, SB4.2.1***

Text that has been changed in any manner or impacted by UL's electronic publishing system is marked with a vertical line in the margin.

Documents
Document Sharing Hub

Full document details: UL 1963 2021

The new and revised requirements are substantially in accordance with Proposal(s) on this subject dated May 17, 2013.

All rights reserved. No part of this publication may be reproduced, stored in a retrieval system, or transmitted in any form by any means, electronic, mechanical photocopying, recording, or otherwise without prior permission of UL.

UL provides this Standard "as is" without warranty of any kind, either expressed or implied, including but not limited to, the implied warranties of merchantability or fitness for any purpose.

In no event will UL be liable for any special, incidental, consequential, indirect or similar damages, including loss of profits, lost savings, loss of data, or any other damages arising out of the use of or the inability to use this Standard, even if UL or an authorized UL representative has been advised of the possibility of such damage. In no event shall UL's liability for any damage ever exceed the price paid for this Standard, regardless of the form of the claim.

Users of the electronic versions of UL's Standards for Safety agree to defend, indemnify, and hold UL harmless from and against any loss, expense, liability, damage, claim, or judgment (including reasonable attorney's fees) resulting from any error or deviation introduced while purchaser is storing an electronic Standard on the purchaser's computer system.

Documents
Document Sharing Hub

Full document details: UL 1963 2021

JUNE 1, 2011
(Title Page Reprinted: March 25, 2021)

ANSI/UL 1963-2021

UL 1963

Standard for Refrigerant Recovery/Recycling Equipment

First Edition – October, 1989
Second Edition – October, 1995
Third Edition – September, 2005

Fourth Edition

June 1, 2011

This ANSI/UL Standard for Safety consists of the Fourth Edition including revisions through March 25, 2021.

The most recent designation of ANSI/UL 1963 as an American National Standard (ANSI) occurred on March 17, 2021. ANSI approval for a standard does not include the Cover Page, Transmittal Pages, and Title Page.

Comments or proposals for revisions on any part of the Standard may be submitted to UL at any time. Proposals should be submitted via a Proposal Request in UL's On-Line Collaborative Standards Development System (CSDS) at https://csds.ul.com.

UL's Standards for Safety are copyrighted by UL. Neither a printed nor electronic copy of a Standard should be altered in any way. All of UL's Standards and all copyrights, ownerships, and rights regarding those Standards shall remain the sole and exclusive property of UL.

COPYRIGHT © 2021 UNDERWRITERS LABORATORIES INC.

Documents
Document Sharing Hub

Full document details: UL 1963 2021

No Text on This Page

Documents
Document Sharing Hub

Full document details: UL 1963 2021

CONTENTS

INTRODUCTION

1 Scope 9
2 General 9
2.1 Units of measurements 9
2.2 References 9
2.3 Terminology 9
3 Glossary 9

CONSTRUCTION

4 General 13
5 Nonmetallic Material 14
5.1 Classification 14
5.2 Ignition sources 15
5.3 Application and location 17
6 Assembly 17
6.1 General 17
6.2 Mechanical protection 18
6.3 Electrical protection 20
7 Barriers 24
8 Accessories 25
9 Enclosures 26
9.1 General 26
9.2 Doors and covers 28
9.3 Enclosures exposed to weather 30
10 Field Supply Connections 32
10.1 General 32
10.2 Terminals 33
10.3 Leads 34
10.4 Grounding 34
11 Supply Connections – Cord-Connected Equipment 35
12 Internal Wiring and Wiring Methods 38
12.1 General 38
13 Separation of Circuits 43
14 Bonding for Grounding 44

ELECTRICAL COMPONENTS

15 Current-Carrying Parts 46
16 Insulating Material 47
17 Switches and Controllers 47
17A Remotely Operated Equipment 53
18 Motors 54
19 Motor Overload Protection 56
19.1 General 56
19.2 Protection of single-phase nonhermetic motors 56
19.3 Protection of single-phase hermetic refrigerant motor-compressors 58
19.4 Protection of three-phase motors 58
20 Fuseholders 58
21 Receptacles 59
22 Receptacle Overcurrent Protection 59
23 Valves and Solenoids 60

AVA Documents
Document Sharing Hub
Full document details: UL 1963 2021

24 Capacitors 60
25 Transformer Protection 61
25.1 High-voltage transformer 61
25.2 Overcurrent protective device 63
25.3 Secondary circuits – general 63
25.4 Extra-low-voltage electrical circuits 64
26 Electric Heaters 65
27 Electric Heater Control 66
28 High-Voltage Control Circuit Conductor Overcurrent Protection 67
28.1 General 67
28.2 Direct-connected high-voltage control circuit 67
28.3 Tapped high-voltage control circuit 67
28.4 Overcurrent protective device 68
29 Circuit Breakers, Fusing Resistors and Supplementary Protectors 68
30 Connectors 69
31 Electrical Cable, Conduit and Tubing 69
32 Electrical Insulation Systems 69
33 Electromagnetic Interference Filters 69
34 Fuses 70
35 Lighting Systems 70
36 Optical Isolators and Semiconductor Devices 70
36A Information Technology Equipment 71
37 Outlet Boxes 71
38 Terminal Blocks 71
39 Batteries and Battery Chargers 71
40 Wireways, Auxiliary Gutters and Associated Fittings 72

SPACINGS

41 High-Voltage Circuits 72
42 Extra-Low-Voltage Circuits 73
43 Alternate Spacings – Clearances and Creepage Distances 74

REFRIGERANT SYSTEM

44 Refrigerants 74
45 Refrigerant Recovery Capacity 75
46 Refrigerant Tubing and Hoses 76
46.1 Tubing 76
46.2 Hoses 77
47 Refrigerant-Containing Parts 77
48 Pressure-Limiting Device 78
49 Pressure Relief 78
49.1 General 78
49.2 Relief valves 79
49.3 Fusible plugs or rupture members 79
50 DOT Storage Cylinders 79

PERFORMANCE

51 Instrumentation 80
51.1 Temperature measurements 80
51.2 Pressure measurements 81
52 Tests on Nonmetallic Materials 81
52.1 General 81

AVA Documents
Document Sharing Hub
Full document details: UL 1963 2021

52.2 Burnout test – impedance protected motors 82
52.3 Fastener strength test 83
53 Test Voltage 84
54 Leakage Current Test – Cord Connected Equipment 84
55 Input Test 87
56 Starting Test 87
57 Temperature and Pressure Test 88
58 Tests for Refrigerant Hoses 92
59 Dielectric Voltage-Withstand Test 95
60 Condenser Fan Motor Failure Test 96
61 Condenser Water Failure Test 97
62 Rain Test 97
63 Stability Test 101
64 Strain Relief Test 101
65 Burnout Tests – Electromagnetic Components 102
66 Burnout Test – High-Voltage Transformers 102
67 Burnout Test – Electric Heater 103
68 Burnout Tests – Extra-Low Voltage Transformers 104
69 Overload Test – High-Voltage Transformers 105
69A Overload and Endurance Test for Operating Controls 106
69B Switch Mode Power Supply Units – Overload Test 107
70 Overvoltage and Undervoltage Tests 108
71 Current Overload Test – Bonding Conductors and Connections 108
72 Insulation Resistance Test 108
72.1 General 108
72.2 Electric heaters 108
73 Limited Short-Circuit Test 109
73.1 General 109
73.2 Motor overload protective device 110
73.3 Bonding conductors and connections 111
73.4 Motor circuit conductors and connections 111
74 Electric Heater Control Tests 111
74.1 Endurance test 111
74.2 Calibration test 111
75 Protective Devices – Maximum Continuous Current Test 111
76 Strength Tests – Pressure Containing Components Refrigerant System 112
77 Tests on Refrigerant Storage Fill Limiting Devices 114
77.1 Operational test 114
77.2 Endurance test 114
77.3 Vibration test 114
77.4 Rough usage test 115
77.5 Float crush test 115
77.6 Compatibility test 115
78 Tests on Weight Scale Assemblies 115
78.1 Operational test 115
78.2 Endurance test 116
78.3 Vibration test 116
78.4 Rough usage test 116
79 Tests of Gaskets and Seals Used in Refrigerant Systems 116
79.1 General 116
79.2 Tensile strength and elongation test 116
79.3 Refrigerant exposure test 117
79.4 Oil immersion test 117
80 Shelf Strength Test 117
81 Strength of Handles Test 118
82 Component Restraint Test 118

AVA Documents
Document Sharing Hub
Full document details: UL 1963 2021

82A Wiring Endurance Test ... 118
83 Accelerated Aging Tests on Gaskets, Sealing Compounds, and Adhesives ... 119
84 Accelerated Aging Test – Electric Heaters ... 120
85 Reliability Test – Heater Terminations ... 120
85A Protective Electronic Circuit Tests ... 121
85A.1 General ... 121
85A.2 Fault conditions abnormal test ... 121
85A.3 Electromagnetic compatibility (EMC) tests ... 122
85A.4 Programmable component reduced supply voltage test ... 124
85A.5 Fuse-link test ... 124
86 Metallic Coating Thickness Test ... 125
86A Refrigerant Identification Tests ... 126
86A.1 General ... 126
86A.2 Infrared analysis ... 126
86A.3 Gas chromatography analysis ... 127

MANUFACTURING AND PRODUCTION TESTS

87 Pressure Tests ... 127
88 Production Fatigue Test ... 127
89 Production Line Dielectric Voltage-Withstand Tests ... 128
90 Production Line Grounding Continuity Tests ... 129
90A Protective Control Quality Management Program and Functional Testing ... 129
90B Annual Refrigerant Identification ... 130

MARKING

91 General ... 130
92 Permanently Connected Equipment ... 136
93 Cord Connected Equipment ... 141

INSTRUCTIONS

94 Installation and Operating Instructions ... 142

SUPPLEMENT SA – OPTIONAL PERFORMANCE TEST FOR REFRIGERANT RECOVERY AND RECOVERY/RECYCLING EQUIPMENT

SA1 Evaluated Ambient Liquid/Vapor Recovery Test ... 145

SUPPLEMENT SB – REQUIREMENTS FOR REFRIGERANT RECOVERY/RECYCLING EQUIPMENT INTENDED FOR USE WITH A FLAMMABLE REFRIGERANT

SB1 Scope ... 147
SB2 Definitions ... 147
SB3 Equipment Construction ... 147
SB4 Refrigerant Recovery/Recycling Equipment Hose Assemblies ... 149
SB4.1 Hose assemblies for use with flammability class 2L, 2 and 3 refrigerants ... 149
SB4.2 Hose assemblies for use with flammability class A2 and A3 refrigerants ... 149
SB5 Marking, Installation and Operating Instructions ... 149
SB5.1 Marking ... 149
SB5.2 Installation and operating instructions ... 150

APPENDIX A

Documents
Document Sharing Hub
Full document details: UL 1963 2021

APPENDIX B – Operating and Protective (“Safety Critical”) Control Functions (Normative)

Documents
Document Sharing Hub

Full document details: UL 1963 2021

No Text on This Page

Documents
Document Sharing Hub

Full document details: UL 1963 2021

INTRODUCTION

1 Scope

1.1 These requirements cover refrigerant recovery and recycling equipment to be employed in accordance with the National Electrical Code, NFPA 70 and include battery operated equipment.

1.2 These requirements apply to equipment intended for indoor or outdoor use or both.

1.3 These requirements do not cover equipment rated more than 600 volts or employing a universal motor rated more than 250 volts or intended for installation and use in a hazardous (classified) location.

1.3.1 These requirements cover recovery/recycling equipment intended for use with a flammable refrigerant when investigated to the requirements in Supplement SB.

1.4 Refrigerant recovery/recycling equipment intended for use with commercial refrigerant systems, other than automotive, is judged on the basis of compliance with the requirements in this standard, insofar as they are applicable, and further examination and test to determine whether the equipment is acceptable for the purpose.

2 General

2.1 Units of measurements

2.1.1 Values stated without parentheses are the requirement. Values in parentheses are explanatory or approximate information.

2.1.2 Unless indicated otherwise, all voltage and current values mentioned in this standard are rms.

2.2 References

2.2.1 Any undated reference to a code or standard appearing in the requirements of this standard shall be interpreted as referring to the latest edition of that code or standard.

2.3 Terminology

2.3.1 The term “equipment” as used in these requirements refers to all refrigerant recovery/recycling and recovery (extraction) equipment or any part thereof covered by these requirements unless specifically noted otherwise.

3 Glossary

3.1 For the purpose of these requirements, the following definitions apply.

3.2 ACCESSORY – An optional electrical device or other component intended for installation in or connection to the equipment for the purpose of modifying or supplementing its functions. The accessory may be factory installed or intended for installation by the user or service personnel.

3.2.1 ADJUSTABLE SPEED DRIVE – A combination of power converter, inverter, motor, and motor-mounted auxiliary devices such as encoders, tachometers, thermal switches and detectors, air blowers, heaters, and vibration sensors.

Documents
Document Sharing Hub
Full document details: UL 1963 2021

3.2.2 ADJUSTABLE SPEED DRIVE SYSTEM – An interconnected combination of equipment that provides a means of adjusting the speed of a mechanical load coupled to a motor. A drive system typically consists of an adjustable speed drive and auxiliary electrical apparatus.

3.3 BARRIER, INSULATING – A partition for the isolation of high-voltage electrical components or circuits.

3.4 BARRIER, MECHANICAL – A rigid partition for the isolation of ignition sources, moving parts or protection of wiring.

3.5 CABINET – The part of the product that provides physical protection to insulated wiring, enclosures, moving parts, motors, enclosed electrical parts, refrigeration tubing or other parts that may cause a risk of injury to persons.

3.5.1 CAPACITOR, CLASS Y – Capacitor or resistor-capacitor unit of a type suitable for use in situations where failure of the capacitor could lead to danger of electric shock. (Examples would include capacitors connected across the primary and secondary circuits where electrical isolation is required to prevent an electric shock or between hazardous live parts and accessible parts.)

3.6 CAPILLARY TUBE – Device made of tubing with an outer diameter of less than 3/16 in. (4.7 mm) and used to reduce the pressure of the refrigerant between the condenser and evaporator. It also regulates the refrigerant flow.

3.7 CIRCUITS, ELECTRICAL –

a) Extra-Low-Voltage – A circuit supplied by:

1) An AC potential of not more than 42.2 volts peak (30 V rms) and power of 100 VA or less; or

2) A DC potential of 30 V supplied by a primary battery; or

3) A Class 2 transformer, as defined by the National Electrical Code, NFPA 70; or

4) A combination of an isolating transformer and fixed impedance which as a unit complies with all performance requirements for a Class 2 transformer.

b) High-Voltage – A circuit involving a potential of not more than 600 volts and having circuit characteristics in excess of those of an extra low-voltage circuit.

3.8 COMPONENT – A device or fabricated part of the recovery/recycling equipment covered by the scope of a safety standard dedicated to that purpose. If incorporated in recovery/recycling equipment, a product that is otherwise typically field installed (e.g. luminaire) is considered to be a component. Unless otherwise specified, materials that compose a device or fabricated part, such as aluminum or copper, are not considered components. Generally, components are incomplete in construction features or restricted in performance capabilities. Such components are intended for use only under specific, limited conditions, such as certain temperatures not exceeding specified limits.

3.9 COMPRESSOR – A refrigerant motor-compressor with the suction side (low side) intended to be connected to a system from which the refrigerant is being removed. The discharge side is connected to the refrigerant recovery tank.

3.10 CONTROL CIRCUIT – A circuit that carries electric signals directing the performance of a controller that in turn, governs power delivered to a motor or other load in the equipment. A control circuit does not carry main power current.

AVA Documents
Document Sharing Hub

Full document details: UL 1963 2021

3.11 CONTROL CIRCUIT, DIRECT-CONNECTED HIGH-VOLTAGE – A circuit that is supplied from a branch circuit separate from a branch circuit that supplies other loads within the equipment. It is not tapped from the load side of the overcurrent device(s) of the controlled circuit(s) within the equipment.

3.12 CONTROL CIRCUIT, TAPPED HIGH-VOLTAGE – A circuit that is tapped within the equipment from the load side of the overcurrent device for the controlled load.

3.12.1 CONTROL FUNCTION (CLASS A, B or C) – Actuation of an electrical or electronic device (or devices) that are part of the refrigerant recovery/recycling equipment. Software may be used in the actuation of the device(s). Class A is not intended to be relied upon to reduce the risk of electric shock, fire or injury to persons. Class B is intended to reduce the risk of electric shock, fire or injury to persons. Class C is intended to further reduce the risks involving special hazards, such as explosion. A device with Class A actuation is considered to be an operating control, whereas a device with Class B or Class C actuation is considered to be a protective control.

3.13 CONTROL, OPERATING – A device or assembly of devices, the operation of which starts or regulates the end product during normal operation. For example, a thermostat, the failure of which a thermal cutout/limiter or another layer of protection would mitigate the potential hazard, is considered an operating control. Operating controls are also referred to as “regulating controls”. Operating controls can also include other controlling devices such as switches, contactors, relays and similar devices. Appendix B specifies control functions that are not considered to result in a risk of fire, electric shock or injury to persons.

3.14 CONTROL, PROTECTIVE – A device or assembly of devices, the operation of which is intended to reduce the risk of electric shock, fire or injury to persons during normal and reasonably anticipated abnormal operation of the product. For example, a thermal cutout/limiter, or any other control/circuit relied upon for normal and abnormal conditions, is considered a protective control. Protective controls are also referred to as “limiting controls” or “safety controls” and are investigated under normal and single-fault conditions. Appendix B specifies control functions that are considered to result in a risk of fire, electric shock or injury to persons. Such functions may also be known as “safety critical”.

3.15 CONTROL, TEMPERATURE-LIMITING – A control that serves to prevent excessive temperature.

3.16 DESIGN PRESSURE – The maximum acceptable working pressure for which the equipment or a specific part is designed.

3.16.1 ELECTRONIC COMPONENT – A part in which electrical conduction is achieved principally by electrons moving through a vacuum, gas or semiconductor. A Metal Oxide Varistor (MOV) is considered to be an electronic component, but neon indicators are not.

3.16.2 ELECTRONIC DISCONNECTION – The de-energizing of a load within a product by an electronic device of a circuit. No electro-mechanical component having an air gap, such as a switch, contactor or relay is used to de-energize the load.

3.17 ENCLOSURE – The part of the product that does one or more of the following:

a) Isolates ignition sources;

b) Renders inaccessible all or any parts of the equipment that may otherwise present a risk of electric shock; or

c) Retards propagation of flame initiated by electrical disturbances within.

Documents
Document Sharing Hub
Full document details: UL 1963 2021

3.18 FUNCTIONAL PART – A part of the product, other than an enclosure or cabinet, used to maintain the intended relative physical position of fixed or moving parts, or maintain the integrity of the structure.

3.18.0 GROUNDING, FUNCTIONAL – Grounding of a point in a product which is necessary for a purpose other than safety.

3.18.1 HOSE ASSEMBLY – A segment of flexible, usually nonmetallic, tubing and having a threaded fitting at each end for the purpose of connecting two components of a refrigeration system.

3.19 IGNITION SOURCE – Any high-voltage electrical component not located within an enclosure.

3.19.1 MAXIMUM OPERATING CURRENT (MOC) – The current resulting when an electric motor and adjustable speed drive or drive system are operated under any conditions such as maximum speed/maximum load, maximum speed/minimum load, minimum speed/minimum load, minimum speed/maximum load, including locked-rotor such that current to the motor/adjustable speed drive or drive system is at a maximum.

3.19.2 MAXIMUM RATED CURRENT (MRC) – The current resulting when a hermetic refrigerant motor-compressor and adjustable speed drive or drive system are operated under any conditions such as maximum speed/maximum load, maximum speed/minimum load, minimum speed/minimum load, minimum speed/maximum load, including locked-rotor such that current to the motor-compressor/adjustable speed drive or drive system is at a maximum.

3.20 MOTOR CONTROLLER – Any switch or device normally used to start and stop a motor by making and breaking the motor current directly.

3.21 NONFUNCTIONAL PART – A part of the product that does not perform a specific function.

3.22 NONFUNCTIONAL PART, SMALL – A nonfunctional part that does not occupy a volume greater than 0.12 in^3 (2 cm^3), does not have a dimension greater than 1.2 in (3 cm), is located so it cannot propagate flame from one area to another, and does not connect a possible source of ignition to other ignitable parts.

3.23 PIPING – Includes pipe, flanges, bolting, gaskets, valves, fittings, the pressure-containing parts of other components, such as strainers and devices that serve such purposes as mixing, separating, muffling, snubbing, distributing, metering, or controlling flow.

3.24 PRESSURE-LIMITING DEVICE – A pressure-responsive mechanism designed to automatically stop the operation of the pressure-imposing element at a predetermined pressure.

3.25 PRESSURE-RELIEF DEVICE – A pressure-actuated valve or rupture member designed to relieve excessive pressure automatically. The device is not temperature-actuated.

3.26 PRESSURE VESSEL – Any refrigerant-containing receptacle of a system other than evaporators [each separate section of which does not exceed 1/2 ft^3 (0.014 m^3) of refrigerant containing volume], evaporator coils, compressors, condenser coils, controls, headers, pumps, piping, filters and strainers.

Exception: A refrigerant-containing receptacle identified as an ASME pressure vessel in accordance with ASME Boiler and Pressure Vessel Code, Section VIII.

3.26.1 PROTECTIVE ELECTRONIC CIRCUIT (PEC) – An electronic circuit that prevents a risk of fire, electric shock or injury to persons under abnormal operating conditions.

Documents
Document Sharing Hub
Full document details: UL 1963 2021

3.27 RECOVERY EQUIPMENT – An appliance that transfers refrigerant in any condition from a product to an external container without necessarily testing or processing the refrigerant.

3.28 RECYCLING EQUIPMENT – An appliance that extracts refrigerant from a product and cleans the refrigerant for reuse.

3.28.1 SOFTWARE – Pre-loaded data which creates, affects, and/or modifies the functionality of the equipment except that this does not include any pre-loaded data programmed into an integrated circuit chip that requires physical access and removal of the chip for reprogramming.

3.28.2 SOFTWARE UPDATE – Occurs if a version of data (software) replaces or modifies the previous version of data. This could include replacing or re-installing a version of data with an identical version of data.

3.28.3 SWITCH MODE POWER SUPPLY UNIT – Electronic device incorporating transformer(s) and electronic circuitry(ies), that converts electrical power into single or multiple power outputs by rapidly switching a solid-state device on and off. It may also isolate the input circuit from the output circuit and regulate and/or convert the output voltage and current. The device may consist of one or more individual units with identical or different waveforms and frequencies including dc output.

3.28.4 THERMISTOR – A thermally sensitive semiconductor resistor, which shows over at least part of its resistance/temperature characteristic a significant non-linear change in its electrical resistance with a change in temperature. A thermistor may be either of the positive temperature coefficient (PTC) type or of the negative temperature coefficient (NTC) type.

3.29 ULTIMATE STRENGTH – The highest stress level that the refrigerant component or vessel can tolerate without rupture.

3.30 VOLTAGE FOLDBACK – A circuit design feature intended to protect the power supply output transistors. When overcurrent is drawn by the load, the supply reduces the output voltage and current to within the safe power dissipation limit of the output transistors.

CONSTRUCTION

4 General

4.1 Ferrous metal parts used to support or retain electrical components in position shall be protected against corrosion by metallic or nonmetallic coatings, such as plating or painting.

Exception: This requirement does not apply to parts, such as washers, screws, bolts, and similar parts, where corrosion of such unprotected parts would not affect compliance with the requirements of this standard.

4.2 Exposed unimpregnated asbestos material shall not be used. The unprotected edge of a gasket sandwiched between two parts is considered to be exposed.

4.3 Electrical insulating materials and systems used inside a hermetically sealed motor-compressor enclosure shall be compatible with the refrigerants and oils intended to be used in accordance with the Standard for Safety of Household and Similar Electrical Appliances, Part 1, General Requirements, UL 60335-1, together with the Standard for Household and Similar Electrical Appliances, Part 2: Particular Requirements for Motor-Compressors, UL 60335-2-34. They shall also be compatible with each other and with other materials used within the system.

Documents
Document Sharing Hub
Full document details: UL 1963 2021

4.4 Movable equipment employing carrying handles or straps shall be permanently marked according to 91.30.

4.5 All nonmetallic parts, excluding small nonfunctional parts shall comply with 5.1, 5.2, 5.3, and Table 52.1.

4.6 In addition to the requirement in 4.5, nonmetallic materials that serve as electrical insulation or that directly support live parts shall comply with the requirements for electrical insulation in the Standard for Polymeric Materials – Use in Electrical Equipment Evaluations, UL 746C.

4.7 A component shall:

a) Comply with the safety standard covering that component;

b) Be used in accordance with its rating(s) established for the intended conditions of use;

c) Be used within its established use limitations or conditions of acceptability;

d) Comply with the applicable requirements of this end product standard; and

e) Not contain mercury.

Exception: A component of a product covered by this standard is not required to comply with a specific component requirement that:

a) Involves a feature or characteristic not required in the application of the component in the product; or

b) Is superseded by a requirement in this standard; or

c) Is separately investigated when forming part of another component, provided the component is used within its established ratings and limitations.

4.8 A component that is also required to perform other necessary functions, such as overcurrent protection, ground-fault circuit interruption, surge suppression, any other similar functions, or any combination thereof, shall comply additionally with the requirements of the applicable standard(s) covering products that provide those functions.

4.9 A component made of drawn or machined brass and containing more than 15 percent zinc shall comply with the 10-Day Moist Ammonia Air Stress Cracking Test as specified in the Standard for Refrigerant-Containing Components and Accessories, Nonelectrical, UL 207.

5 Nonmetallic Material

5.1 Classification

5.1.1 Materials shall be classified with respect to flammability characteristics that are established by the tests specified in the Standard for Tests for Flammability of Plastic Materials for Parts in Devices and Appliances, UL 94.

5.1.2 Materials shall be assigned flammability ratings based on greatest to least resistance to flame and are identified as: 5VA, 5VB, V-0, V-1, V-2, HF-1, HF-2, HB, and HBF.

5.1.3 In reference to 5.1.2, the assigned flammability rating shall be appropriate for the material-use application in accordance with 5.2 and Table 52.1.

Documents
Document Sharing Hub
Full document details: UL 1963 2021

5.2 Ignition sources

5.2.1 Parts formed from nonmetallic materials rated HB or HBF and positioned as shown in Figure 5.1 shall be separated from ignition sources by means of a mechanical barrier, extending at least to the boundary surface of the space if such parts are located:

a) Below an ignition source and within Space A; and

b) Above an ignition source and within Space B; and

c) In the vertical plane relative to an ignition source and within Space C.

Documents
Document Sharing Hub

Full document details: UL 1963 2021

Figure 5.1

Separation of Ignition Sources from Nonmetallic Materials

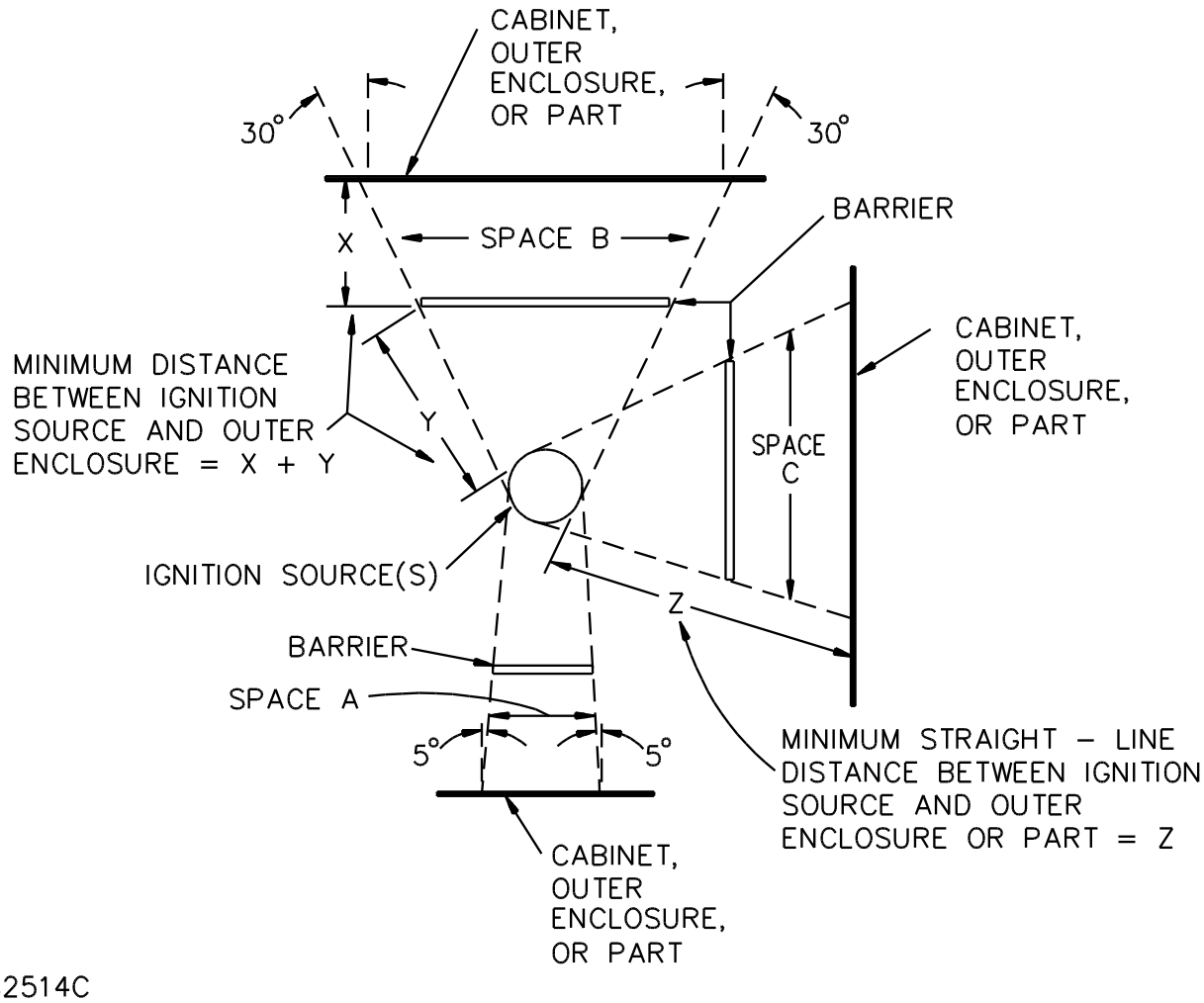

Notes:

Space A – Represents the volume below the ignition source determined by a straight line that moves about the ignition source while remaining at the angle of 5 degrees from the vertical and is always so oriented that the volume is maximum.

Space B – Represents the volume above the ignition source determined in the same manner as Space A, except that the angle is 30 degrees from the vertical.

Documents
Document Sharing Hub
Full document details: UL 1963 2021

5.2.2 The HB or HBF materials referenced by 5.2.1 shall be located such that the distance between:

a) High-voltage wiring not employing VW-1 and the HB or HBF materials shall be a minimum of 2 in (51 mm), and

b) Any other ignition source and the HB or HBF materials shall be a minimum of 4 in (102 mm).

5.2.3 In reference to 5.2.2 and Figure 5.1, the minimum distance for materials located:

a) Above the ignition source shall be as shown in Distance X + Y; and

b) In the vertical plane relative to the ignition source shall be as shown in straight-line Distance Z.

5.3 Application and location

5.3.1 Nonmetallic fasteners used as a part of the enclosure, cabinet or functional part shall comply with the Fastener Strength Test, 52.3.

5.3.1.1 In reference to 5.3.1, nonmetallic fasteners required to comply with 52.3 shall include:

a) Nonmetallic ultrasonic, solvent or heat welds;

b) Nonmetallic screws and/or nuts; and

c) Nonmetallic parts into which metal or nonmetallic screws will be threaded.

5.3.2 The combined total exposed surface area of all small, nonfunctional parts shall not exceed 144 in^2 (929 cm^2).

5.3.3 When thermal insulation is located between a cabinet and inner liner, the product shall comply with both (a) and (b) or it can comply only with item (c):

a) All holes within the cabinet and inner liner shall be closed;

b) The cabinet surfaces shall be securely fastened such that the maximum spacing between screws, spot welds, or other securement means does not exceed 6 in (152.4 mm);

c) The thermal insulation shall be rated HF-1.

6 Assembly

6.1 General

6.1.1 Refrigerant recovery and/or recycling equipment shall be provided with the necessary hoses for connection in the intended manner to the equipment being serviced. These hoses shall be no longer than 8 ft (2.44 m), shall be provided with shut-off devices within 12 in (0.3 m) of the ends, and shall be constructed in accordance with Section 46.

6.1.2 The shut-off devices mentioned in 6.1.1 shall prevent refrigerant flow when the hose is not connected.

6.1.3 The equipment shall be assembled so that removal and replacement of tanks and containers, and the like, will not result in damage to electrical components and wiring, or to refrigerant-containing components.

AVA Documents
Document Sharing Hub
Full document details: UL 1963 2021

6.1.4 Equipment having provision for the storage of refrigerant cylinders or the like shall be provided with means for retaining the cylinders in position.

6.1.5 Electrical components shall be installed on the unit and wired as necessary for intended operation.

6.1.6 Pressure-limiting devices, when required, shall be installed on the assembly and connected to the high side of the system.

6.1.7 Except as specified in 6.1.8, refrigerant-containing parts shall be factory connected with tubing or piping.

6.1.8 In reference to 6.1.7 refrigerant-containing parts not factory connected with tubing or piping shall be:

a) Intended for installation in the field;

b) Intended for connection to the refrigeration system being serviced;

c) Be packaged with the recovery/recycling equipment; and

d) Comply with the requirements in this standard.

6.1.9 In reference to 6.1.7, if flexibility is needed, a hose assembly used within recovery/recycling equipment in place of metal tubing or piping shall comply with 46.2.1. In addition, the hose assembly shall not:

a) Exceed 36 in. (0.91 m) in length; and

b) Be connected to another hose assembly located within the recovery/recycling equipment.

6.2 Mechanical protection

6.2.1 Horizontally-hinged doors that provide access to the storage compartments that may cause injury to persons upon unintentional closing shall be counterweighted, spring loaded, or provided with an automatic latch to retain them in the open position. Action members, such as springs and latches that may cause injury to persons due to pinching or the like, shall be enclosed or guarded.

6.2.2 A slideout component, such as a drawer or shelf, shall be restrained to prevent it from being unintentionally pulled free of its supporting means. Compliance shall be determined in accordance with the Component Restraint Test, Section 82.

6.2.3 With the equipment installed in its intended manner as specified in the Installation and Operating Instructions, Section 94, openings in the equipment shall be constructed or located to reduce the risk of injury to persons due to unintentional contact with:

a) Moving parts, such as fan blades, blower wheels, gears, and belts, and

b) Surfaces that exceed the temperatures permitted by subitems 2 and 3 of item D of Table 57.1.

6.2.3.1 Except as specified in 6.2.3.2, in evaluating openings, parts of the cabinet or enclosure, such as covers, panels, grilles, and guards shall be removed unless tools are required for their removal.

6.2.3.2 If a cover, panel, grille or guard can be removed without the use of a tool to expose a moving part, the moving part shall be made inoperative through the use of an interlocking mechanism complying with 9.2.1.

AVA Documents
Document Sharing Hub
Full document details: UL 1963 2021

6.2.3.3 Except as specified in 6.2.3.4, the minor dimension of any opening shall not exceed 3 in (76.2 mm).

6.2.3.4 In reference to 6.2.3.3, equipment having an opening with a minor dimension larger than 3 in (76.2 mm) shall be provided with fixed components located to reduce the likelihood of contact with a moving part. Fixed components could include baffles, refrigerant tubing, and the like.

6.2.4 *Deleted*

6.2.5 Except as specified in 6.2.5.2, a fan blade employing a guard with openings having a minor dimension sized:

a) Less than 1 in (25.4 mm) shall be guarded such that the probe illustrated in Figure 6.1 cannot contact any part of the fan blade.

b) One inch (25.4 mm) or larger shall be guarded such that the distance from the opening to the fan blade complies with Table 6.1.

6.2.5.1 In reference to 6.2.5, the probe shall be inserted through openings in the guard with a force of not more than 2.5 lb (11.1 N).

6.2.5.2 In reference to 6.2.5, if the probe illustrated in Figure 6.1 contacts the fan blade, it shall not contact any part other than the trailing edge of the fan blade. Also, the relationship between weight (w) in pounds, radius (r) in inches and speed (n) in revolutions per minute of the fan blade shall be such that k in the following equation is less than 100:

$$k = 6 \times 10^{-7} (wr^2 \ n^2)$$

Figure 6.1

Probe for fan blades

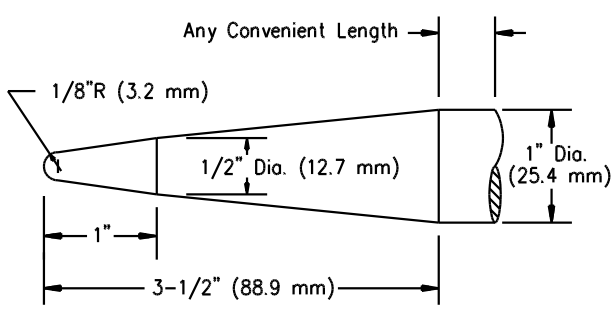

PA 160

6.2.6 Except as specified in 6.2.6.1, a moving part other than a fan blade shall be guarded such that the distance from an opening to the moving part is in accordance with Table 6.1.

Documents
Document Sharing Hub
Full document details: UL 1963 2021

Table 6.1
Clearance from openings

Minor dimension of opening[a,d]		Minimum distance from opening to moving part[c]	
in	(mm)	in	(mm)
1/4	(6.4)	3/8	(9.5)
3/8	(9.5)	1-1/4	(31.8)
1/2	(12.7)	2	(50.8)
3/4	(19.1)	3-5/8	(92.1)
1	(25.4)	5-1/4	(133.4)
1-1/2	(38.1)	8-3/8	(212.7)
2	(50.8)	11-5/8	(295.3)
Over 2[b]	(Over 50.8)	30	(762.0)

[a] Openings less than 1/4 in (6.4 mm) are not to be considered.

[b] But not more than 3 in (76.2 mm). See 6.2.3.3.

[c] Also applies to hot parts. See 6.2.3 (b).

[d] For fan blade guards that have openings with minor dimensions less than 1 in (25.4 mm), see 6.2.5 (a).

6.2.6.1 In reference to 6.2.5(b) and 6.2.6, if an opening has a minor dimension intermediate between two of the values shown in Table 6.1, the distance from the opening to the moving part shall not be less than that found by interpolating between the corresponding values in the right column of the table.

6.2.7 The minor dimension of the opening shall be determined by the largest hemispherically tipped cylindrical probe that can be inserted through the opening with a force of not more than 2.5 lbs (11.1 N).

6.2.8 *Deleted*

6.2.9 *Deleted*

6.3 Electrical protection

6.3.1 Louvers and other openings in the enclosure shall be constructed and located to reduce the risk of unintentional contact with uninsulated live parts. Parts of the enclosure, such as covers, panels, or grilles shall be removed unless:

a) Tools are required for their removal, or

b) An interlock complying with 9.2.1 is provided.

6.3.2 If an opening in the enclosure does not permit the entrance of a 3/4 in (19.1 mm) diameter rod, the probe illustrated in:

a) Figure 6.2 shall not be capable of touching any uninsulated live parts; and

b) Figure 6.3 shall not be capable of touching any film-coated insulated wire.

6.3.2.1 In reference to 6.3.2, the probes shall be inserted through any openings in grilles, screens, louvers, or the like, with a force of not more than 5.0 lbs (22.3 N).

Documents
Document Sharing Hub
Full document details: UL 1963 2021

Figure 6.2

Probe

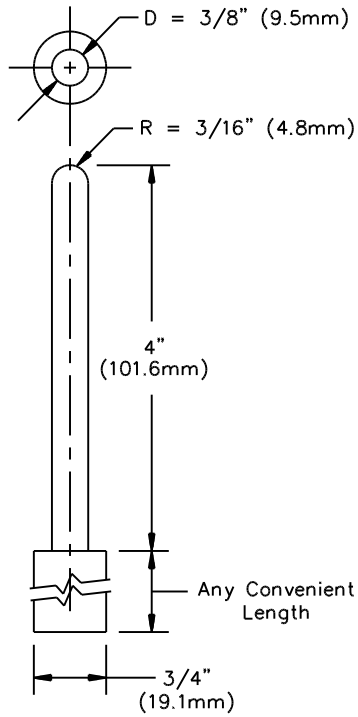

Documents
Document Sharing Hub
Full document details: UL 1963 2021

Figure 6.3

Probe

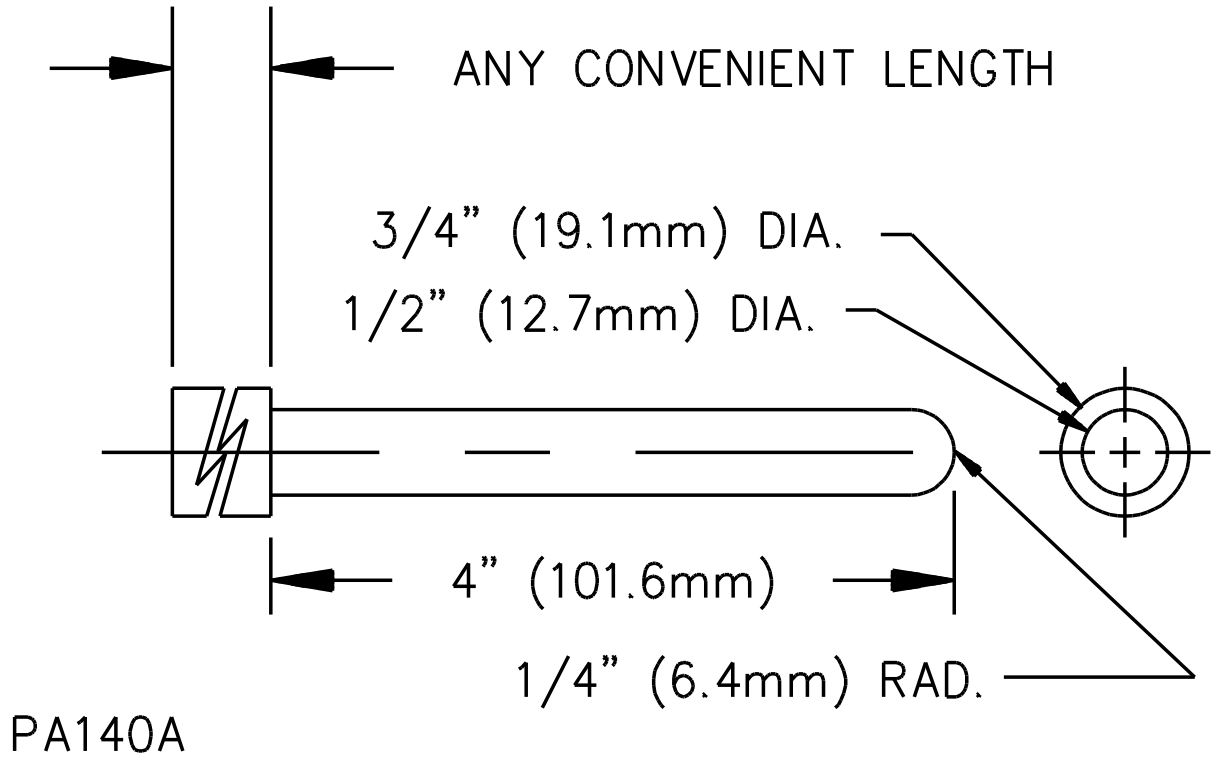

6.3.3 When an opening in the enclosure permits the entrance of a 3/4 in (19.1 mm) diameter rod, the conditions described in Figure 6.4 shall be used to determine compliance with the requirements. The minor dimension of the opening shall not exceed 1 in (25 mm) in any case.

6.3.4 In addition to the requirements of 6.3.2 and 6.3.3, uninsulated live parts located inside the enclosure that are likely to be contacted by persons performing operations, such as replacing fuses, resetting manual-reset devices, oiling motors, or other such service operations shall be located, guarded or enclosed to prevent unintentional contact, unless tools are required to expose the live part.

Documents
Document Sharing Hub
Full document details: UL 1963 2021

Figure 6.4

Opening in enclosure

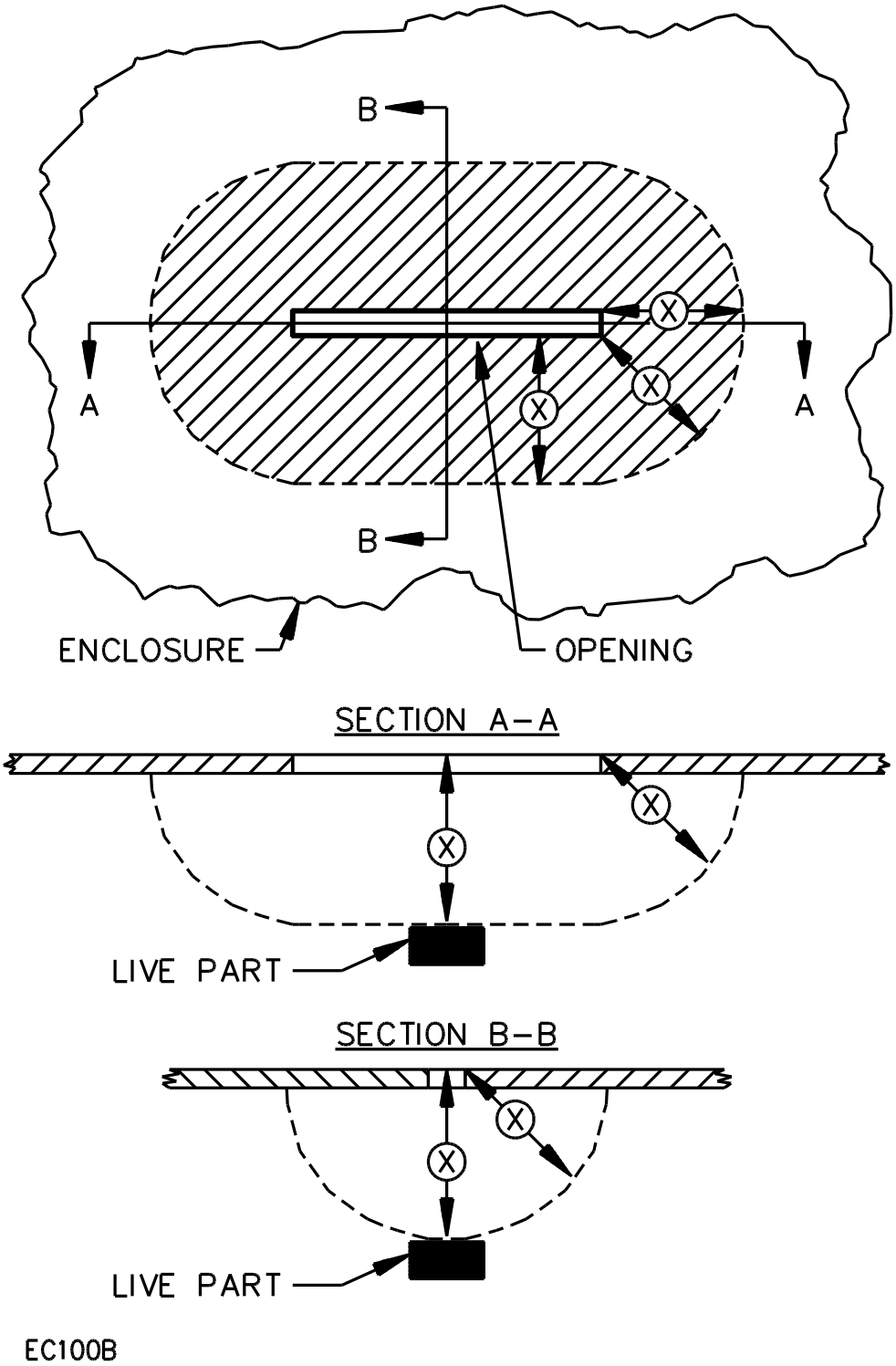

The opening is acceptable when, within the enclosure, there is no uninsulated live part or film-coated insulated wire (1) less than X in (mm) from the perimeter of the opening, as well as (2) within the volume generated by projecting the perimeter X inches normal to the plane. X equals five times the diameter of the largest diameter rod that can be inserted through the opening, but not less than 4 in (102 mm).

Documents
Document Sharing Hub
Full document details: UL 1963 2021

6.3.5 Except as specified in 6.3.5.2 and 6.3.5.4, a switch, lampholder, an attachment-plug receptacle, or similar component shall be secured in position and shall be prevented from turning. The means for preventing rotation shall consist of more than friction between surfaces.

6.3.5.1 In reference to 6.3.5, a stem-mounted switch or other similar device intended for mounting within a single-hole shall be prevented from rotating by either a:

a) Toothed lock washer; or

b) An interference lock, such as by a notch in the stem of the device.

6.3.5.2 In reference to 6.3.5, a switch that is not prevented from rotating shall:

a) Be operated by mechanical means rather than direct contact by persons;

b) Be of a plunger or other type that does not tend to rotate when operated;

c) Be mounted such that operating the switch is unlikely to loosen it;

d) Not cause electrical spacings to be reduced below the minimum required values specified in Sections 41 – 43 if the switch rotates.

6.3.5.3 In reference to 6.3.5.2 (b), a toggle switch shall not be used since such a switch is subjected to forces that tend to rotate the switch during its operation.

6.3.5.4 In reference to 6.3.5, a lampholder that is not prevented from rotating shall:

a) Be of a type in which the lamp cannot be replaced, such as a neon pilot or indicator light in which the lamp is sealed in a nonremovable jewel; and

b) Not cause electrical spacings to be reduced below the minimum required values specified in Sections 41 – 43 if the lampholder rotates.

6.3.6 *Deleted*

6.3.7 An uninsulated current-carrying part, or a part that supports a live part, shall not rely solely upon friction between surfaces and shall be positively secured:

a) To the base or mounting surface so that it will be prevented from turning or shifting in position if such motion results in a reduction of electrical spacings below the minimum required values specified in Sections 41 – 43; or

b) By a toothed lock washer or an interference lock as specified in 6.3.5.1.

6.3.8 *Deleted*

7 Barriers

7.1 A mechanical barrier shall be secured to the mounting surface such that tools are required for its removal and shall be formed from one or more of the following:

a) Metal, minimum 0.026 in (0.66 mm) thick,

b) A nonmetallic material which shall be considered a part of the cabinet and which shall comply with the cabinet requirements of Table 52.1,

Documents
Document Sharing Hub
Full document details: UL 1963 2021

c) A finned coil in which the coil is located in the:

1) Vertical plane such that a 2 in long by 1/4 in diameter (51 by 6.4 mm) rod cannot contact the part or material being protected from the opposite side of the finned coil; or

2) Horizontal plane if the coil employs flat plate fins with a minimum of 12 fins per inch (12 fins per 25.4 mm) and having at least two rows of tubing in depth.

d) Any other material or construction determined to be equivalent to (a) – (c).

7.1.1 An insulating barrier shall:

a) Be constructed to withstand the most severe condition anticipated in service;

b) Comply with 7.2 and with the requirements for mechanical barriers in 7.1 if exposed or otherwise subjected to mechanical damage; and

c) Be reliably held in place.

7.2 Except as specified in 7.2.1, an insulating barrier shall be formed from one or more of the following:

a) Vulcanized fiber or varnished cloth not less than 0.028 inch (0.71 mm) thick,

b) Fiberglass, minimum 0.5 in (12.7 mm) thick,

c) A nonmetallic that complies with 5.1 – 5.3 and the functional parts requirements of Table 52.1 together with the requirements for electrical insulation in the Standard for Polymeric Materials – Use in Electrical Equipment Evaluations, UL 746C,

d) Any other material or construction determined to be equivalent to (a) to (c).

7.2.1 An insulating barrier not complying with 7.2 shall be used only for extra-low-voltage circuits that do not contain a protective control.

7.3 In reference to 7.2, a rigid backing or a mechanical barrier shall be provided behind these materials unless the materials are determined to be suitably rigid.

7.4 *Deleted*

8 Accessories

8.1 Equipment having provisions for the use of electrical accessories to be attached in the field shall be constructed so that the use of these accessories will not introduce a risk of fire, electric shock, or injury to persons. See 91.18 and 91.20.

8.2 The equipment shall comply with all requirements of this standard with or without the accessory installed.

8.3 Installation of accessories by the user shall be restricted to an arrangement that can be accomplished by means of receptacles and plug-in connectors.

8.4 Installation of accessories by service personnel shall be by means of receptacles, plug-in connectors, insulated wire connectors, or by connection to existing wiring terminals.

8.5 Accessories intended for connection to a source of field supply independent of that of the unit shall:

Documents
Document Sharing Hub
Full document details: UL 1963 2021

a) Comply with the requirements specified in Section 10 when intended to be a permanently connected accessory.

b) Comply with the requirements specified in Section 11 when intended to be a cord-connected accessory.

In no case shall a permanently connected accessory be used with supply cord connected equipment.

8.6 When an accessory is powered from a source of supply separate from that supplying the unit, disconnection of any one supply shall automatically cause de-energization of all circuits within the unit and accessory.

Exception: Automatic de-energization may be omitted when the unit and accessory are marked in accordance with 91.36.

8.7 Installation of accessories shall not require the cutting of wiring or the soldering of connections by the installer. Installation shall not require cutting, drilling, or welding either in electrical enclosures, or other areas where such operations may result in damage to electrical or refrigeration components and wiring within the enclosure.

8.8 Strain-relief means shall be provided for the wiring in the accessory when there is a possibility of transmitting stress to the terminal connections during installation. See Strain Relief Test, Section 64.

8.9 All terminals and wiring intended to be field connected shall be identified on the:

a) Accessory,

b) Equipment when connections are to be made between the accessory and the equipment, and

c) Wiring diagram(s).

8.10 The mounting location of the accessory shall be indicated on the equipment.

Exception: When the mounting location is fixed due to the function of the accessory and arrangement of the equipment, and instructions are provided covering the installation and location for the accessory, the mounting location of the accessory need not be indicated.

8.11 As part of the investigation, accessories are to be trial-installed to determine that their installation is feasible, the instructions are detailed and correct, and the use of the accessories does not introduce a risk of fire, electric shock, and injury to persons.

9 Enclosures

9.1 General

9.1.1 An enclosure shall be formed and assembled so that it will have the strength and rigidity necessary to resist the conditions of intended use without increasing the risk of fire or injury to persons due to total or partial collapse and the resulting reduction of spacings, loosening or displacement of parts, or other defects. Enclosures for individual electrical components, outer enclosures, and combinations of the two are to be considered in determining compliance with this requirement.

9.1.2 Among the factors that are to be taken into consideration when judging the acceptability of an enclosure are:

Documents
Document Sharing Hub
Full document details: UL 1963 2021

a) Mechanical strength,

b) Resistance to impact,

c) Moisture-absorptive properties,

d) Flame resistance,

e) Resistance to distortion at temperatures to which the material may be subjected under conditions of use, and

f) Resistance to corrosion.

For a nonmetallic enclosure or part of an enclosure, all of these factors, including the effect of exposure to weathering when for outdoor use, are to be considered with respect to aging.

9.1.3 The enclosure of the equipment shall reduce the risk of mechanical damage to wiring, electrical components, and refrigerant tubing.

9.1.4 The enclosure shall reduce the risk of emission of molten metal, burning insulation, flaming particles, or the like, through openings onto flammable material, including the surface over which the equipment is mounted.

9.1.5 Electrical components, such as controls, solenoids, starting relays, and switches, shall be individually enclosed except terminals unless it can be determined that failure of a component will not result in a risk of fire. See Burnout Tests – Electromagnetic Components, Section 65.

9.1.6 Electrical parts, see 9.1.5, within the outer cabinet need not be individually enclosed when the assembly complies with (a) – (c):

a) Their construction and location with respect to openings in the outer cabinet will not result in the emission of flame or molten metal through openings in the cabinet, or it can be shown that failure of the component would not result in a risk of fire,

b) There are no openings in the bottom of the compartment in which the part is located that would permit dropping of molten metal, and the like, on flammable material, and

c) The part is not in proximity to flammable material other than electrical insulation.

9.1.7 A sheet metal enclosure is to be judged for acceptability with respect to its size, shape, metal thickness, and use in a particular application. Sheet steel shall be not less than 0.026 in (0.66 mm) thick when uncoated or 0.029 in (0.74 mm) when galvanized, and nonferrous sheet metal shall be not less than 0.036 in (0.91 mm), except for relatively small areas or for surfaces which are curved or otherwise reinforced.

9.1.8 Sheet metal to which a wiring system is to be connected in the field shall be not less than 0.032 in (0.081 mm) thick when uncoated steel, not less than 0.034 in (0.86 mm) thick when galvanized steel, and not less than 0.045 in (1.14 mm) thick when nonferrous.

9.1.9 When threads for the connection of conduit are tapped through a hole in an enclosure wall, or when an equivalent construction is employed, there shall be not less than three nor more than five threads in the metal, and the construction shall permit a conduit bushing to be attached. When threads for the connection of conduit are not tapped through a hole in an enclosure wall, conduit hub, or the like, there shall be no less than 3-1/2 threads in the metal, and there shall be a smooth, rounded inlet hole for the conductors that shall afford protection to the conductor equivalent to that provided by a standard conduit

AVA Documents
Document Sharing Hub
Full document details: UL 1963 2021

bushing and have an internal diameter approximately the same as that of the corresponding trade size of rigid conduit.

9.1.10 A knockout in a sheet metal enclosure shall be secured in place, but shall be capable of being removed without deformation of the enclosure that would result in damage to electrical components, reduction in electrical spacings, or both. See 9.1.12.

9.1.11 A knockout shall remain in place when a force of 10 lb (44.5 N) is applied at right angles to the knockout by a 1/4 in (6.4 mm) diameter mandrel with a flat end. The mandrel shall be applied at the point most likely to cause movement of the knockout.

9.1.12 A knockout shall be provided with a flat surrounding surface for seating of a conduit bushing and shall be located so that installation of a bushing at any knockout likely to be used during installation will not reduce spacings between uninsulated live parts and the bushing to less than those required.

9.1.13 In measuring a spacing between an uninsulated live part and a bushing installed in a knockout, it is to be assumed that a bushing having the dimensions indicated in Table 9.1 is in place, in conjunction with a single locknut installed on the outside of the enclosure.

9.1.14 Steel enclosures shall be protected against corrosion by metallic or nonmetallic coatings, such as plating or painting. See 9.3.1 – 9.3.6.

Table 9.1
Knockout or hole sizes and dimensions of bushings

Trade size of conduit, in (mm OD)		Knockout or hole diameter, in (mm)		Bushing dimensions			
				Diameter, in (mm)		Overall height, in (mm)	
1/2	(21.3)	7/8	(22.2)	1	(25.4)	3/8	(9.5)
3/4	(26.7)	1-3/32	(27.8)	1-15/64	(31.4)	27/64	(10.7)
1	(33.4)	1-23/64	(34.5)	1-19/32	(40.5)	33/64	(13.1)
1-1/4	(42.3)	1-23/32	(43.7)	1-15/16	(49.2)	9/16	(14.3)
1-1/2	(48.3)	1-31/32	(50.0)	2-13/64	(56.0)	19/32	(15.1)
2	(60.3)	2-15/32	(62.7)	2-45/64	(68.7)	5/8	(15.9)

9.2 Doors and covers

9.2.1 In reference to 6.2.3.2 or 6.3.1 a required interlocking mechanism shall comply with the relevant requirements in 17.8 – 17.16.3 and 17.17 – 17.17.1 and shall:

a) Be engaged with the cover in the closed position before parts are energized, and

b) Secure the cover in the closed position when engaged.

9.2.2 A hinged or pivoted panel or cover shall be positioned or arranged so that when it is in an open position falling or swinging due to gravity or vibration will not cause injury to persons from:

a) The panel or cover,

b) Moving parts, or

c) Uninsulated live parts that can cause a risk of electric shock.

Documents
Document Sharing Hub
Full document details: UL 1963 2021

9.2.3 The assembly shall be arranged so that an overcurrent protective device, such as a fuse, can be replaced and manual-reset devices can be reset:

a) Without removing parts other than a service cover(s) or panel(s), and

b) By opening the cover or door enclosing the device.

9.2.4 A required protective device shall not be accessible from outside the enclosure without opening a door or cover.

Exception: The operating handle of a circuit breaker, the reset button of a manually resettable motor protector, the reset button of a manually resettable pressure switch, and similar parts may project outside the enclosure, provided that the clearance between the control member and the edge of the opening in the outer enclosure is not more than 1/8 in (3.2 mm) for any setting or position of the control member.

9.2.5 Covers for enclosures of fuses in high-voltage circuits shall be hinged. Covers for manual-reset overload protective device enclosures shall be hinged if it is required to open the cover to reset the device.

Exception: A hinged cover is not required when the only fuses enclosed are:

a) Supplementary type control circuit fuses, provided that the fuses and control circuit loads (other than a fixed control circuit load such as a pilot lamp) are within the same enclosure; or

b) Supplementary type fuses of 2 amp or less for small auxiliary resistance heaters, such as crankcase heaters, with a maximum rating of 100 W; or

c) Extractor-type fuses with their own enclosure; or

d) Fuses in extra-low-voltage circuits.

9.2.6 A cover required to be hinged shall not depend solely upon screws or other similar means to hold it closed, but shall be provided with a latch or the equivalent.

9.2.7 With reference to the requirements of 9.2.6, a spring latch, a magnetic latch, a dimple, or any other mechanical arrangement that will hold the cover closed and will require some effort on the user's part to open is acceptable. When provided as the sole means for securing the cover an interlocking mechanism as described in 9.2.1 is also acceptable.

9.2.8 A door or cover giving direct access to fuses in other than extra-low-voltage circuits shall shut closely against a 1/4 in (6.4 mm) rabbet or shall have either turned flanges for the full length of four edges or angle strips fastened to it. Flanges or angle strips shall fit closely with the outside of the wall of the box and shall overlap the edges of the box by not less than 1/2 in (12.7 mm). A construction, such as a fuse enclosure, located within an outer enclosure, or a flange and rabbet combination that affords the equivalent protection is acceptable.

9.2.9 Strips used to provide rabbets, or angle strips fastened to the edges of a door shall be secured at not less than two points, not more than 1-1/2 in (38 mm) from each end of each strip and at points between these end fastenings, not more than 6 in (152 mm) apart.

Documents
Document Sharing Hub
Full document details: UL 1963 2021

Table 9.2
Corrosion protection means

Type of cabinet and enclosure	Thickness 0.053 in (1.35 mm) and heavier as specified by	Thickness less than 0.053 in (1.35 mm) as specified by
Outer cabinets which protect motors, wiring or enclosed current-carrying parts	9.3.2	9.3.3
Inside enclosures which protect current-carrying parts other than motors	9.3.2	9.3.3
Outer cabinets which are the sole enclosure of current-carrying parts	9.3.3	9.3.3

9.3 Enclosures exposed to weather

9.3.1 Sheet steel cabinets and electrical enclosures exposed to the effects of weathering shall be protected against corrosion by the means specified in Table 9.2 or by other metallic or nonmetallic coatings that provide equivalent protection.

Exception: These requirements are not applicable to a metal part, such as a decorative grille, that is not required for conformance with this standard.

9.3.2 To comply with the requirements of 9.3.1, one of the following coatings shall be used:

a) Hot-dipped mill-galvanized sheet steel conforming with the Coating Designation G60 or A60 in Table 1 of the Standard Specification for Steel Sheet, Zinc-Coated (Galvanized) or Zinc-Iron Alloy-Coated (Galvannealed) by the Hot-Dip Process, ASTM A653/A653M, with not less than 40 percent of the zinc on any side, based on the minimum single spot test requirement in the ASTM Specification. The weight of zinc coating may be determined by any recognized method; however, in case of question, the weight of coating shall be established in accordance with the Standard Test Method For Weight [Mass] Of Coating On Iron And Steel Articles With Zinc Or Zinc-Alloy Coatings, ASTM A90/A90M. An A60 (alloyed) coating shall also comply with 9.3.4.

b) A zinc coating, other than that provided on hot-dipped mill-galvanized sheet steel, uniformly applied to an average thickness of not less than 0.00041 in (0.0104 mm) on each surface with a minimum thickness of 0.00034 in (0.0086 mm). The thickness of the coating shall be established by the Metallic-Coating Thickness Test, Section 86. An annealed coating shall also comply with 9.3.4.

c) Two coats of an organic finish of the epoxy or alkyd-resin type or other outdoor paint on both surfaces. Unless acceptability of the paint can be determined by consideration of its composition, corrosion tests are required.

9.3.3 To comply with 9.3.1, one of the following coatings shall be used:

a) Hot-dipped mill-galvanized sheet steel conforming with the Coating Designation G90 in Table 1 of the Standard Specification for Steel Sheet, Zinc-Coated (Galvanized) or Zinc-Iron Alloy-Coated (Galvannealed) by the Hot-Dip Process, ASTM A653/A653M, with not less than 40 percent of the zinc on any side, based on the minimum single spot test requirements in that ASTM Specification. The weight of zinc coating may be determined by any recognized method; however, in case of question, the weight of coating shall be established in accordance with the Standard Test Method For Weight [Mass] Of Coating On Iron And Steel Articles With Zinc Or Zinc-Alloy Coatings, ASTM A90/A90M.

b) A zinc coating, other than that provided on hot-dipped mill-galvanized sheet steel, uniformly applied to an average thickness of not less than 0.00061 in (0.0155 mm) on each surface with a

AVA Documents
Document Sharing Hub
Full document details: UL 1963 2021

minimum thickness of 0.00054 in (0.0137 mm). The thickness of the coating shall be established by the Metallic-Coating Thickness Test, Section 86. An annealed coating shall also comply with 9.3.4.

c) A cadmium coating of not less than 0.001 in (0.025 mm) thick on both surfaces. The thickness of coating shall be established in accordance with the Metallic-Coating Thickness Test, Section 86.

d) A zinc coating conforming with 9.3.2 (a) or (b) with one coat of outdoor paint as specified in 9.3.2(c).

e) A cadmium coating of not less than 0.00075 in (0.0191 mm) thick on both surfaces with one coat of outdoor paint on both surfaces or not less than 0.0005 in (0.013 mm) thick on both surfaces with two coats of outdoor paint on both surfaces. The thickness of the cadmium coating shall be established in accordance with the Metallic-Coating Thickness Test, Section 86, and the paint shall be as specified in 9.3.2(c).

9.3.4 An annealed zinc coating that is bent or similarly formed after annealing shall be painted in the bent or formed area if the bending or forming process has damaged the zinc coating, as evidenced by flaking or cracking of the zinc coating at the outside radius of the bent or formed section visible at 25 power magnification.

9.3.5 With reference to the requirements of 9.3.7, simple sheared or cut edges and punched holes are not considered to be formed, but extruded and rolled edges and holes shall comply with 9.3.4.

9.3.6 With reference to the requirements of 9.3.1, other finishes, including paints, special metallic finishes, and combinations of the two, are acceptable when comparative tests with galvanized sheet steel without annealing, wiping, or other surface treatment complying with 9.3.2(a) or 9.3.3(a), as applicable, indicate that they provide equivalent protection. Among the factors to be taken into consideration when judging the acceptability of such coating systems are exposure to salt spray, to moist carbon dioxide-sulphur dioxide-air mixtures, to moist hydrogen sulphide-air mixtures, and to ultraviolet light and water.

9.3.7 Nonferrous enclosures may be employed without special corrosion protection. See 9.1.2.

9.3.8 Gaskets required to seal electrical enclosures against the entrance of rain and condensate shall comply with 83.1 – 83.4.2 or with the Standard for Gaskets and Seals, UL 157 if the gasket physical properties are equivalent to those specified in 83.1 – 83.4.2. In addition, each gasket shall:

a) Be held in place by mechanical fasteners, adhesives, or as indicated in 9.3.9; and

b) Be neoprene, rubber, or thermoplastic or other materials with equivalent properties.

9.3.9 Sealing compounds required to seal electrical enclosures shall comply with 83.5.

9.3.10 Adhesives required to secure gaskets shall comply with 83.6.

9.3.11 In reference to 9.3.8(b), gaskets that are not held in place by mechanical fasteners or adhesives but are intended to be retained in the correct position by some other means shall be prevented from displacement either:

a) Due to their location within the equipment; or

b) By the placement of other components in the enclosure so that if the equipment cover is removed, the gasket will be reengaged in the intended manner when the cover is replaced.

Documents
Document Sharing Hub

Full document details: UL 1963 2021

10 Field Supply Connections

10.1 General

10.1.1 Equipment of the following types shall have provision for permanent connection to the power supply in accordance with the National Electrical Code, ANSI/NFPA 70:

a) Equipment rated in excess of 250 V.

b) Polyphase equipment.

c) Equipment employing a water-cooled condenser.

d) Except as indicated in 11.10 equipment in which the sum of the load currents exceed 16 amperes. The largest sum of concurrent load currents shown on the nameplate shall be used to determine the rating.

e) Equipment other than of the self-contained type.

10.1.2 As used in 10.2.1 – 10.2.10, field-wiring terminals are considered to be the terminals to which power supply, control, or equipment grounding connections will be made in the field when the equipment is installed.

10.1.3 A knockout for connection of a field-wiring system to a field-wiring compartment shall accommodate conduit of the trade size determined by applying Table 10.1.

10.1.4 Space shall be provided in the field-wiring compartment or outlet box for installation of conductors of the number and size required by 10.1.7. The space provided shall permit the required number and size of at least 6-in (150-mm) lengths of Type TW or THW wire brought into the wiring compartment. When required, a trial installation is to be made.

Exception: Conductors other than Type TW or THW may be used if specified in the installation instructions.

10.1.5 The location of a terminal box or compartment in which power supply connections are to be made shall permit these connections to be inspected after the equipment is installed. The connections are to be accessible without removing parts other than a service cover or panel and the cover of the outlet box or compartment in which the connections are made.

10.1.6 A terminal compartment intended for the connection of a supply raceway shall be secured in position and shall be prevented from turning.

10.1.7 The equipment shall be provided with field-wiring terminals or leads for the connection of conductors having an ampacity of not less than that indicated in 92.11. It is to be assumed that branch circuit conductors rated 140°F (60°C) will be used when the required circuit ampacity is 100 amp or less and that conductors rated 167°F (75°C) will be used when the required ampacity is more than 100 amp.

Documents
Document Sharing Hub
Full document details: UL 1963 2021

10.2 Terminals

Table 10.1
Trade size of conduit in inches (mm OD)

Wire size		Number of wires									
AWG	(mm^2)	2		3		4		5		6	
14	(2.1)	1/2	(21.3)	1/2	(21.3)	1/2	(21.3)	1/2	(21.3)	1/2	(21.3)
12	(3.3)	1/2	(21.3)	1/2	(21.3)	1/2	(21.3)	3/4	(26.7)	3/4	(26.7)
10	(5.3)	1/2	(21.3)	1/2	(21.3)	1/2	(21.3)	3/4	(26.7)	3/4	(26.7)
8	(8.4)	3/4	(26.7)	3/4	(26.7)	1	(33.4)	1	(33.4)	1-1/4	(42.3)
6	(13.3	3/4	(26.7)	1	(33.4)	1	(33.4)	1-1/4	(42.3)	1-1/4	(42.3)
4	(21.2)	1	(33.4)	1	(33.4)	1-1/4	(42.3)	1-1/4	(42.3)	1-1/2	(48.3)
3	(26.7)	1	(33.4)	1-1/4	(42.3)	1-1/4	(42.3)	1-1/2	(48.3)	1-1/2	(48.3)
2	(33.6)	1	(33.4)	1-1/4	(42.3)	1-1/4	(42.3)	1-1/2	(48.3)	2	(60.3)
1	(42.4)	1-1/4	(42.3)	1-1/4	(42.3)	1-1/2	(48.3)	2	(60.3)	2	(60.3)

Note – This table is based on the assumption that all conductors will be of the same size and there will be no more than six conductors involved or when all of them are not of the same size, the internal cross-sectional area of the smallest conduit that may be used is determined by multiplying by 2.5 the total cross-sectional area of the wires, based on the cross-sectional area of Type THW wire.

10.2.1 A field-wiring terminal shall be secured in position and prevented from turning or shifting by means other than friction between surfaces. This may be accomplished by two screws or rivets; by square shoulders or mortices; by a dowel pin, lug, or offset; by a connecting strap or clip fitted into an adjacent part; or by some equivalent method.

10.2.2 For field-wiring terminals intended for 8 AWG (8.4 mm^2) and larger conductors, pressure wire connectors shall be used. For field-wiring terminals intended for 10 AWG (5.3 mm^2) and smaller conductors, the parts to which wiring connections are to be made may consist of clamps or wire binding screws with cupped washers, terminal plates, or the equivalent to hold the wire in position.

10.2.3 A wire binding screw at a field-wiring terminal shall not be smaller than No. 10 (4.8 mm diameter), except that a No. 8 (4.2 mm diameter) screw may be used for the connection of a conductor no larger than 14 AWG (2.1 mm^2) and a No. 6 (3.5 mm diameter) screw may be used for the connection of a 16 or 18 AWG (1.2 or 0.8 mm^2) control circuit conductor.

10.2.4 It should be noted that according to the National Electrical Code, ANSI/NFPA 70, 14 AWG (2.1 mm^2) is the smallest conductor that the installer may use for branch circuit wiring and thus is the smallest conductor that may be anticipated at a terminal for the connection of a power supply wire.

10.2.5 A terminal plate for a wire binding screw shall be of metal not less than 0.030 in (0.76 mm) thick for a 14 AWG (2.1 mm^2) or smaller wire and not less than 0.050 in (1.27 mm) thick for a wire larger than 14 AWG. In either case, there shall be not less than two full threads in the metal.

10.2.6 A terminal plate formed from stock having the minimum required thickness may have the metal extruded at the hole tapped for the binding screw to provide two full threads.

Exception: Two full threads are not required if a lesser number of threads results in a connection in which the threads will not strip when tightened in accordance with the torques indicated in the Standard for Wire Connectors, UL 486A-486B.

AVA Documents
Document Sharing Hub

Full document details: UL 1963 2021

10.2.7 Upturned lugs or a cupped washer shall retain a conductor of the size mentioned in 10.1.7, but no smaller than 14 AWG (2.1 mm^2), under the head of the screw or the washer.

10.2.8 Wiring terminals for use with all alloys of copper, aluminum, or copper-clad aluminum conductors, shall comply with 10.2.1, 10.2.3, 10.2.5, 10.2.6, 10.2.9, and 10.2.10 or with the Standard for Equipment Wiring Terminals for Use with Aluminum and/or Copper Conductors, UL 486E.

10.2.9 A wire binding screw shall thread into metal.

10.2.10 A field-wiring terminal intended for the connection of a grounded conductor shall be of a metal, or plated with a metal, substantially white in color and shall be readily distinguishable from the other terminals, or identification of that terminal shall be shown in some other manner, such as on an attached wiring diagram.

10.3 Leads

10.3.1 Leads intended for connection to any external high-voltage circuit or to an external extra-low-voltage circuit that contain one or more of the components specified in 42.3 shall comply with all of the following:

a) Be one of the types of wiring specified in 12.1.3;

b) Be 6 inches (152 mm) or more in length, as measured from the lead end to the strain relief means, unless the use of a shorter lead is required to prevent damage to the lead insulation;

c) Be provided with strain relief if stress on the lead may be transmitted to terminals, splices, or internal wiring. In such cases, leads shall comply with the Strain Relief Test, Section 64;

d) Not be connected to wire binding screws or pressure wire connectors located in the same compartment as the lead ends (that are intended for spliced connections to the field-wiring) unless the screws or connectors are rendered unusable for field-wiring connections or the lead ends are insulated; and

e) Be insulated at the free end, if the lead will not be used in every installation and if the end can reduce spacings below the minimum acceptable values specified in Section 41 for high-voltage circuits or Section 42 for extra-low-voltage circuits.

10.3.2 A lead intended for the connection of a grounded conductor shall be finished to show a white or gray color, shall be distinguishable from other leads, and no other lead shall be so identified.:

10.4 Grounding

10.4.1 Equipment shall have an equipment grounding terminal or lead.

10.4.2 A terminal intended solely for connection of an equipment grounding conductor shall be capable of securing a conductor of the size required by the National Electrical Code, ANSI/NFPA 70.

10.4.3 A soldering lug, a push-in connector, a screwless connector, or a quick connect or similar friction fit connector shall not be used for the grounding terminal.

10.4.4 A wire binding screw intended for the connection of an equipment grounding conductor shall have a green-colored head that is hexagonal, slotted, or both. Except as indicated in 10.4.5, a pressure wire connector intended for connection of such a conductor shall be plainly identified such as by being marked "G," "GR," "GROUND," or "GROUNDING," or by a marking on a wiring diagram provided on the equipment. The wire binding screw or pressure wire connector shall be secured to the frame or enclosure

AVA Documents
Document Sharing Hub
Full document details: UL 1963 2021

of the equipment and shall be located so that it is unlikely to be removed during service operations, such as replacing fuses, resetting manual-reset devices, or oiling motors.

10.4.5 When a pressure wire connector intended for grounding is located where it could be mistaken for the neutral conductor of a grounded supply, it shall be identified by a marking “EQUIPMENT GROUND”, by a green color identification, or by both.

10.4.6 The surface of an insulated lead intended solely for the connection of an equipment grounding conductor shall be finished in a continuous green color or a continuous green color with one or more yellow stripes, and no other lead shall be so identified.

10.4.7 Functional grounding shall not be relied upon for equipment grounding.

11 Supply Connections – Cord-Connected Equipment

11.1 Cord-connected equipment shall be provided with:

a) A non-detachable power supply cord for connection to the supply by means of a plug; or

b) An appliance coupler and inlet (motor attachment plug) for connection of a detachable power supply cord and either a detachable power supply cord or instructions for selection of a suitable detachable power supply cord.

11.2 In reference to 11.1, a power supply cord and plug or appliance coupler shall comply with the Standard for Cord Sets and Power Supply Cords, UL 817. An inlet shall comply with the Standard for Attachment Plugs and Receptacles, UL 498.

11.3 Cord connected equipment consisting of two separate units joined together or two of the same units in a single structure may be provided with more than one power supply cord if all of the following conditions are met:

a) Not more than two cords are provided;

b) Each cord is of the type, size and rating required or permitted for the type of equipment and the load supplied to each unit;

c) Each attachment plug cap is sized based on the load supplied to each unit;

d) The total marked nameplate equipment load in amperes (current through both cords) is not more than 24 amperes;

e) If both cords provide power to the same control enclosure or electrical panel that could result in an electrical shock, fire hazard or injury to persons, the equipment shall be provided with a mechanical or electrical interlock system that results in all ungrounded conductors of the supply being disconnected in the event that either cord is disconnected;

f) The markings in 93.3 (a) and (c) are provided; and

g) The instructions contain information as indicated in 94.9.

11.4 In reference to 11.3, where the rated current input to both units exceeds 80 percent of the branch circuit to which the equipment will be connected, the unit with the highest rated current input shall be marked adjacent to its cord in accordance with 93.3 (b).

11.5 The rating marked on the equipment in accordance with 93.1 shall not exceed 80 percent of the attachment plug rating.

AVA Documents
Document Sharing Hub
Full document details: UL 1963 2021

11.6 Except as indicated in 11.7, cord-connected equipment shall employ a grounding-type attachment plug that complies with the ANSI designation specified in Table 11.1 based on the equipment voltage and ampere rating.

Table 11.1
Attachment plugs

Nameplate rating			Attachment plug	
Volts	**Phase**	**Amperes[a]**	**Rating**	**ANSI designation[b]**
110– 120	1	12.0	15 amperes, 125 volts	5-15P
110 – 120	1	16.0	20 amperes, 125 volts	5-20P
110 – 120	1	24.0	30 amperes, 125 volts	5-30P
110 – 120	1	40.0	50 amperes, 125 volts	5-50P
200 – 240	1	12.0	15 amperes, 250 volts	6-15P
200 – 240	1	16.0	20 amperes, 250 volts	6-20P
200 – 240	1	24.0	30 amperes, 250 volts[c]	6-30P
200 – 240	1	40.0	50 amperes, 250 volts[c]	6-50P
110 – 120/200 – 240	1	12.0	15 amperes, 125/250 volts	14-15P
110 – 120/200 – 240	1	16.0	20 amperes, 125/250 volts	14-20P
110 – 120/200 – 240	1	24.0	30 amperes, 125/250 volts[c]	14-30P
110 – 120/200 – 240	1	40.0	50 amperes, 125/250 volts[c]	14-50P
200 – 240	3	12.0	15 amperes, 250 volts	15-15P
200 – 240	3	16.0	20 amperes, 250 volts	15-20P
200 – 240	3	24.0	30 amperes, 250 volts[c]	15-30P
200 – 240	3	40.0	50 amperes, 250 volts[c]	15-50P

[a] Ampere rating is maximum permitted to be marked on equipment nameplate for attachment plug indicated. See 11.5.

[b] Standard for Wiring Devices – Dimensional Requirements, ANSI/NEMA WD6.

[c] 30 and 50 amp attachment plugs permitted only on equipment intended to be moved from place to place in normal service for cleaning as specified in 11.10.

11.7 In reference to 11.6, if the grounding-type attachment plug does not comply with the ANSI designation specified in Table 11.1, then the equipment shall be rated 250 V or less and shall be intended for connection to circuits rated for other than:

a) 60 Hz; and/or

b) The voltages specified in the first column of Table 53.1.

11.8 The power supply cord shall be provided with an equipment grounding conductor terminating within the equipment. The supply cord equipment grounding conductor shall be:

a) Finished with a continuous green color or with a continuous green color with one or more yellow stripes, and no other conductor shall be so identified;

Documents
Document Sharing Hub
Full document details: UL 1963 2021

b) Secured to the frame or enclosure of the equipment by a positive means that is not likely to be removed during any servicing operation not involving the power supply cord. A sheet metal screw or quick-connect terminal shall not be used; and

c) Connected to the grounding blade of the attachment plug.

11.9 Cord connected equipment shall employ Type SEO, SO, SOO, STO, STOO, SJEO, SJO, SJOO, SJTO, or SJTOO power supply cord rated for use at a voltage not less than the rated voltage of the equipment. The ampacity of the cord as given in the National Electric Code, ANSI/NFPA 70, shall be not less than that required by the ampere input measured in the Temperature and Pressure Test, Section 57. The ampere input value shall include the loads for convenience outlets and the current drawn by accessories intended for use with the equipment. See 91.11 and 91.12.

11.10 In reference to 10.1.1 (d), cord-connected equipment that exceeds 16 amperes shall comply with all of the following:

a) Be intended to be moved from place to place in normal service;

b) Be self-contained;

c) Not require connection to water lines, or the like;

d) Be permanently equipped with casters;

e) Have an electrical rating not exceeding 40 amp, 250 V, single phase.

11.11 The ampacity of a power supply cord on equipment intended for connection to a branch circuit which exceeds the limitations specified in 19.3.2 (a) shall be not less than 80 percent of the maximum continuous current of the compressor motor determined in accordance with Protective Devices – Maximum Continuous Current Test, Section 75, plus the sum of all other loads, including accessories, which may operate concurrently.

Exception: The ampacity of the power supply cord need not be greater than the ampere rating of the attachment plug.

11.12 A power supply cord for outdoor use equipment shall be one of the types specified in 11.9 and identified by the letter “W” following the cord type designation marked on the jacket.

11.13 The length of a power supply cord shall be not less than 6 feet (1.8 m) nor more than 10 feet (3.0 m) as measured between the attachment plug and any point at which the cord exits the equipment cabinet or the last strain relief, whichever is shorter.

11.14 The power supply cord shall be provided with strain relief means so that a stress on the cord will not be transmitted to terminals, splices, or internal wiring. The strain relief means shall comply with the Strain Relief Test, Section 64.

11.15 Moving a power supply cord inward shall not result in either:

a) Cord damage; or

a) A metallic strain relief being able to contact uninsulated live parts. Spacings in accordance with Sections 41, 42 or 43 shall be maintained.

11.16 The edges of the entry hole for the power supply cord, including the cord entry hole in a bushing, shall be smooth and rounded without burrs, fins, or sharp edges that might damage the cord insulation. The power supply cord shall be routed to prevent damage to the cord insulation.

AVA Documents
Document Sharing Hub
Full document details: UL 1963 2021

12 Internal Wiring and Wiring Methods

12.1 General

12.1.1 All wires and cords shall be routed and supported to reduce the risk of damage due to:

a) Sharp edges,

b) Surfaces and parts that operate at temperatures in excess of that for which the wire insulation is rated,

c) Moving parts, and

d) Parts that can be expected to vibrate, such as motors, compressor motors, refrigerant lines, and the like.

Clamping means shall have smooth, rounded surfaces.

Exception: Wires and cords may contact a vibrating part provided that:

a) The wiring is securely fastened to the part at the point of contact so as to restrict movement;

b) The part does not have burrs, fins, or sharp edges, that might abrade the insulation; and

c) Vibration does not place a strain on the wiring or wiring connections.

12.1.2 Wiring shall have insulation rated for the potential involved and the temperatures to which it may be subjected. Compliance shall be determined in accordance with any of the following:

a) Wiring temperatures shall be judged on the basis of the temperatures measured during the applicable temperature test specified in 57.1;

b) Other than motor wiring, all wiring shall:

1) Have an ampacity of the conductors in accordance with Table 12.1, and

2) Not be exposed to heat from radiating sources or heated components.

c) Motor wiring shall have an ampacity not less than 125 percent of the motor full load or maximum operating current rating in addition to complying with item (b).

Table 12.1
Wiring material ampacities

Wire size		
AWG	**(mm^2)**	**Ampacity**
22	(0.41)	4
20	(0.66)	7
18	(0.82)	10
16	(1.3)	13
14	(2.1)	18
12	(3.3)	25

Table 12.1 Continued on Next Page

Documents
Document Sharing Hub
Full document details: UL 1963 2021

Table 12.1 Continued

Wire size		
AWG	(mm^2)	Ampacity
10	(5.3)	30
8	(8.4)	40
6	(13.3)	55
4	(21.2)	70
2	(33.6)	95
1	(42.4)	110

Note – The ampacities shown apply to appliance wiring materials with insulation rated not less than 194°F (90°C).

For types of wires other than appliance wiring materials, the ampacity shall be determined from Tables 1 through 4 and Table 12 in the Canadian Electrical Code, Part I, CSA Standard C22.1 and Tables 310-16 and 310-17 in the National Electrical Code, ANSI/NFPA 70, for the type of wire employed. The correction factors of the referenced tables need not be applied.

12.1.3 Wiring shall comply with one of the following:

a) Standard for Appliance Wiring Material, UL 758;

b) Standard for Thermoset-Insulated Wires and Cables, UL 44;

c) Standard for Flexible Cords and Cables, UL 62; or

d) Standard for Thermoplastic-Insulated Wires and Cables, UL 83.

12.1.4 Wire positioning devices shall comply with the Standard for Positioning Devices, UL 1565.

12.1.5 Wiring that is green or green with one or more yellow stripes shall be used only for grounding conductors, and wiring used for other purposes shall not be so identified.

12.1.6 All wires and cords shall be routed and supported so that they will not be immersed in water unless the insulation is specifically intended for this purpose. Wiring shall be arranged to prevent water caused by condensation, defrosting, or if intended for outdoor use, rain exposure, from entering wiring enclosures and electrical enclosures.

Exception: Water may enter an enclosure when:

a) The point of entrance is not in proximity to live electrical parts, and

b) The live parts are not wetted.

12.1.7 Parallel conductor appliance wiring material of the integral type shall not be ripped more than 3 in (76 mm) unless the minimum wall thickness of the conductor insulation after ripping is at least 0.058 in (1.47 mm). If the material has conductor insulation not less than 0.028 in (0.71 mm) after ripping and is within a separate metal enclosure, conduit, electrical metallic tubing, or metal raceway, the length of rip is not limited.

12.1.8 When cords or appliance wiring material are employed in the machine user accessible compartment, such wiring shall be of a type as indicated by Group B of Table 12.2 and shall be located or protected so as not to be damaged by refrigerant containers, removable shelves, or similar items.

AVA Documents
Document Sharing Hub

Full document details: UL 1963 2021

Table 12.2
Typical wiring materials

Group	Type of wire, cord, or cable[a]	Wire size		Insulation thickness	
		AWG	(mm^2)	in	(mm)
A	Thermoplastic appliance wiring material[b], with insulation thicknesses shown at the right corresponding to wire sizes indicated, or type ACHH, ACTH, ACTHH, FFH-2, TF, TFF, TFN, TFFN, SF-2, SFF-2, RHH, RHW, THW, XHHW, MTW, THWN, PF, PGF, PFF, PGFF, TW	10 and smaller	(5.3)	2/64	(0.8)
		8	(8.4)	3/64	(1.2)
		6	(13.3)	4/64	(1.6)
		4	(21.2)	4/64	(1.6)
		3	(26.7)	4/64	(1.6)
		2	(33.6)	4/64	(1.6)
		1	(42.4)	5/64	(2.0)
		1/0	(54.0)	5/64	(2.0)
		2/0	(67.0)	5/64	(2.0)
		3/0	(85.0)	5/64	(2.0)
		4/0	(107.2)	5/64	(2.0)
B	Appliance wiring material[b] having thermoplastic, or neoprene insulation, with insulation thicknesses shown at right corresponding to the wire sizes indicated; or cord Type S, SE, SO SOO, ST, STO, STOO; SJ, SJE, SJO, SJOO, SJT, SJTO, SJTOO; SP-3, SPE-3, SPT-3	18	(0.82)	4/64	(1.6)
		16	(1.3)	4/64	(1.6)
		14	(2.1)	5/64	(2.0)
		12	(3.3)	5/64	(2.0)
		10	(5.3)	5/64	(2.0)
		8	(8.4)	6/64	(2.4)
		6	(13.3)	8/64	(3.2)
		4	(21.2)	9/64	(3.6)
		2	(33.6)	10/64	(4.0)
C	Rubber appliance wiring material[b], with insulation thickness shown at the right corresponding to wire sizes indicated, or Type S, SJ, SP-3	Same as for Group B			

[a] The designated cord or cable or types of wire other than appliance wiring material may be used without regard to the values specified in this table.

[b] Appliance wiring material acceptable for refrigeration use.

12.1.9 If wiring extends from the cabinet to a hinged door, or is subject to movement during service operations such as routine maintenance, flexible conductors shall be employed. The wiring shall be routed or protected to reduce the risk of damage to the insulation. If the wiring is exposed to the user, the wiring shall be one of the S series of cord specified in Group B of Table 12.2 and shall be provided with strain relief so that stress will not be transmitted to terminals or splices. See Strain Relief Test, Section 64.

12.1.10 With reference to 12.1.9, wiring that is subject to movement shall comply with the Wiring Endurance Test, Section 82A.

12.1.11 Conductors supplying general purpose receptacles are considered as complying with the temperature requirement of 12.1.2 if the conductors are sized according to Table 12.3. See 57.6.

Documents
Document Sharing Hub
Full document details: UL 1963 2021

Table 12.3
Conductors supplying receptacles

Marked rating, amp[a]	Conductor size, AWG (mm^2)
7.0 or less	18 (0.82)
10.0 or less	16 (1.3)
15.0 or less	14 (2.1)
20.0 or less	12 (3.3)

[a] As marked on the equipment. See 91.11 and 91.12.

12.1.12 The insulation of wires or cords connected to fan motors and other auxiliary motors shall be of an oil resistant type, such as Type SJO, SJT, SPT-3, or appliance wiring materials having oil resistant insulation.

12.1.13 If any failure of extra-low-voltage wiring may cause malfunctioning of a limiting device, motor overload protective device, or any other protective device, such wire shall be:

a) Enclosed as specified in 12.1.25;

b) Type SPT-2 or SP-2 cord; or

c) One of the types specified in Group B or C of Table 12.2.

Wires of types specified in Group A of Table 12.2, or wires having equivalent characteristics may be used if such wiring is located in a cavity or compartment of the equipment and is shielded from damage.

12.1.14 All splices and connections shall be mechanically secured and electrically bonded. A soldered connection shall be made mechanically secure before being soldered.

12.1.15 Splices shall be located within the equipment enclosure. They shall be secured in position or located in a separate enclosure so that they are not subject to flexing, motion, or vibration due to air movement, and the like. Strain relief shall be provided on the conductors if the wiring may be moved during servicing operations, such as replacing fuses, resetting manual-reset devices, or oiling motors.

12.1.16 A splice shall be provided with electrical insulation equivalent to that of the conductor insulation if permanence of spacing between the splice and other metal parts is not maintained. Thermoplastic tape wrapped over the sharp ends of conductors is not acceptable.

12.1.17 Splicing devices, such as pressure-type wire connectors, shall comply with the Standard for Wire Connectors, UL 486A-486B or the Standard for Splicing Wire Connectors, UL 486C.

12.1.18 A quick-connecting assembly shall:

a) Comply with the Standard for Electrical Quick-Connect Terminals, UL 310; or

b) Form a secure electrical connection, such as by detents in the mating parts, and shall be acceptable for carrying the current involved during the Temperature and Pressure Test, Section 57. Securement of connections may be determined by engagement/disengagement tests as specified in the Standard for Electrical Quick-Connect Terminals, UL 310.

12.1.19 Wire binding screws shall thread into metal. At terminals, stranded conductors shall be secured by soldered or pressure-type terminal connectors or the conductors shall be soldered or otherwise assembled to prevent loose strands after assembly. Soldered connections shall be made mechanically secure before being soldered.

AVA Documents
Document Sharing Hub
Full document details: UL 1963 2021

12.1.20 Open-slot type connectors shall not be used unless they are constructed to prevent disconnection resulting from loosening of the clamping means. If required spacings may be reduced below the minimum acceptable values by movement of the connector, the shanks of terminal connectors shall be protected by electrical insulation secured in position and not less than 0.028 in (0.71 mm) thick, except as permitted by 41.9.

12.1.21 Holes for passage of wires and cords through rigid partitions, such as walls, panels, or barriers shall have one of the following:

a) Smooth, rounded surfaces;

b) Be provided with smoothly rounded bushings fabricated from materials, such as ceramic, phenolic, cold-molded composition, or fiber; or

c) Be provided with wire insulating bushings that comply with the Standard for Insulating Bushings, UL 635.

12.1.22 A wiring enclosure formed between the cabinet shell, liner, molding, trim strips, or the like shall be constructed of metal or of nonmetallic material, see 9.1.3, and shall provide a smooth wireway with no sharp edges or sharp projecting screws that might damage the wire insulation. Wood framing may be employed in the cabinet-wireway enclosure, but other flammable thermal insulating material may not be in direct contact with the wiring unless it can be shown that a risk of fire is not introduced.

12.1.23 A printed wiring board for high-voltage circuits shall have a minimum flammability level of V-1 when tested according to the method outlined in the Standard for Tests for Flammability of Plastic Materials for Parts in Devices and Appliances, UL 94.

12.1.24 Wiring shall be of the types indicated in Table 12.2 as follows:

a) Group A or B, or

b) Group C if the compartment enclosing the wiring:

1) Contains no openings other than for conduit or piping, and

2) Contains no flammable material other than electrical insulation.

12.1.25 Wiring not enclosed by means of conduit, electrical metallic tubing, metal raceways, or enclosures shall be enclosed according to 12.1.26 – 12.1.32.

12.1.26 No openings shall be located in the top of the compartment unless mechanical barriers or baffles are placed between the wiring and the openings.

12.1.27 No openings shall be located in the bottom of the compartment unless mechanical barriers or baffles are located under the wiring.

12.1.28 Louvers or openings located on the sides and top of the assembly shall not permit entrance of a 1/2 in (12.7 mm) diameter rod.

12.1.29 Openings shall not be located closer than 1/4 in (6.4 mm) to the wiring unless mechanical barriers or baffles are placed between the wiring and the openings.

12.1.30 Other than electrical insulation, wiring shall be separated from HB and HBF materials in accordance with 5.2.1, 5.2.2, or 5.2.3.

Documents
Document Sharing Hub
Full document details: UL 1963 2021

12.1.31 Group A wiring shall be cabled, routed, located or secured to reduce the risk of damage to the wiring when replacing fuses, adjusting control settings and other similar servicing.

12.1.32 Conductors of motor circuits having two or more thermal- or overcurrent-protected motors wired for connection to one supply line shall comply with one or more of the following:

a) A conductor shall have an ampacity of not less than one-third the ampacity of the branch circuit conductors as determined in 10.2.8;

b) A conductor shall be:

1) Size 18 AWG (0.82 mm^2) or larger,

2) Not more than 4 ft (1.2 m) in length, and

3) Protected by a fuse or equivalent overcurrent protective device rated not more than 60 amp.

c) A conductor shall serve as a jumper lead between controls and shall:

1) Not exceed 3 in (76.2 mm) in length, or

2) Be located in an electrical control enclosure.

d) A conductor shall withstand the Limited Short-Circuit Test, Section 73.

13 Separation of Circuits

13.1 Unless provided with insulation rated for the highest voltage involved, insulated conductors of different circuits, (internal wiring including wires in a wiring compartment) shall be separated by insulating barriers or shall be segregated, and shall, in any case, be so separated or segregated from uninsulated live parts connected to different circuits.

13.2 Segregation of insulated conductors may be accomplished by clamping, routing, or other means that maintains permanent separation from insulated or uninsulated live parts of a different circuit.

13.3 Field-installed conductors of any circuit shall be segregated or separated by insulating barriers from field- and factory-installed conductors connected to any other circuit, unless the conductors of both circuits are or will be insulated for the maximum voltage of either circuit.

13.4 Except for wiring terminals, field-installed conductors of a high-voltage circuit or an extra-low-voltage circuit with National Electrical Code, ANSI/NFPA 70, Class 1 wiring shall be segregated or separated by insulating barriers as specified in (a) and (b):

a) From uninsulated live parts connected to a different circuit, other than wiring terminals, and

b) From any uninsulated live parts of electrical components, such as a pressure-limiting device, motor overload protective device, or other protective device, where short-circuiting or grounding may result in a risk of fire, electric shock, or injury to persons.

13.4.1 In reference to 13.4, Sections 41 – 43 specify the requirements for wiring terminals.

13.5 Field-installed conductors of an extra-low-voltage circuit with National Electrical Code, ANSI/NFPA 70, Class 2 wiring shall be segregated or separated by insulating barrier(s) from:

AVA Documents
Document Sharing Hub
Full document details: UL 1963 2021

a) Uninsulated live parts a protective control which is part of an connected to a high-voltage circuit, and

b) Wiring terminals and any other uninsulated live parts of a protective control which is part of an extra-low-voltage circuit.

13.6 *Deleted*

14 Bonding for Grounding

14.1 Equipment shall have provision for the grounding of all exposed or accessible noncurrent carrying metal parts that are likely to become energized and that may be contacted by the user or by service personnel during service operations likely to be performed when the equipment is energized.

14.2 Except as specified in 14.2.1, uninsulated metal parts of the equipment, such as cabinets, electrical enclosures, motor frames and mounting brackets, controller mounting brackets, heater element sheaths, capacitors and other electrical components, interconnecting tubing and piping, valves, and gauges, and refrigerant-containing parts shall be bonded for grounding if they are likely to become energized and are exposed to contact by the user or service personnel.

14.2.1 Metal parts that are not bonded in accordance with 14.2 shall be:

a) Adhesive-attached metal-foil markings, screws, handles, and the like, that are located on the outside of enclosures or cabinets and isolated from electrical components or wiring by grounded metal parts so that they are not likely to become energized;

b) Isolated metal parts, such as motor controller magnet frames and armatures or small assembly screws that are positively separated from wiring and uninsulated live parts;

c) Cabinets, panels, and covers that do not enclose uninsulated live parts if wiring is positively separated from the cabinet, panel, or cover so that such parts are not likely to become energized; or

d) Panels and covers that are insulated from electrical components and wiring by an insulating barrier.

14.3 Metal-to-metal hinge bearing members for a door or cover are acceptable as a means for bonding a door or cover for grounding if a multiple-bearing pin-type hinge(s) is employed.

14.4 An internal connection for bonding internal parts of the enclosure for grounding, but not for a field-installed grounding conductor or for the grounding wire in a power supply cord, may employ a quick connect terminal of the specified dimensions, provided that the connector is not likely to be displaced and the component is limited to use on a circuit having a branch circuit protective device rated as shown in Table 14.2.

Documents
Document Sharing Hub
Full document details: UL 1963 2021