ULC Standards
Normes ULC

JOINT CANADA-UNITED STATES
NATIONAL STANDARD

ANSI/CAN/UL/ULC 199:2022

STANDARD FOR SAFETY

Automatic Sprinklers for Fire-Protection Service

Approved American National Standard
ANSI
ANSI/UL 199-2022

scc ccn

AVA Documents
Document Sharing Hub

Full document details: UL 199 2022

SCC FOREWORD

National Standard of Canada

A National Standard of Canada is a standard developed by a Standards Council of Canada (SCC) accredited Standards Development Organization, in compliance with requirements and guidance set out by SCC. More information on National Standards of Canada can be found at www.scc.ca.

SCC is a Crown corporation within the portfolio of Innovation, Science and Economic Development (ISED) Canada. With the goal of enhancing Canada's economic competitiveness and social well-being, SCC leads and facilitates the development and use of national and international standards. SCC also coordinates Canadian participation in standards development, and identifies strategies to advance Canadian standardization efforts.

Accreditation services are provided by SCC to various customers, including product certifiers, testing laboratories, and standards development organizations. A list of SCC programs and accredited bodies is publicly available at www.scc.ca.

Documents
Document Sharing Hub

Full document details: UL 199 2022

UL Standard for Safety for Automatic Sprinklers for Fire-Protection Service, ANSI/CAN/UL/ULC 199

Thirteenth Edition, Dated February 25, 2022

Summary of Topics

The Thirteenth Edition of the Standard for Automatic Sprinklers for Fire-Protection Service, ANSI/CAN/UL/ULC 199, has been issued to reflect the latest ANSI and SCC approval dates, and to incorporate the proposals dated February 5, 2021 and May 14, 2021.

The requirements are substantially in accordance with Proposal(s) on this subject dated February 5, 2021 and May 14, 2021.

All rights reserved. No part of this publication may be reproduced, stored in a retrieval system, or transmitted in any form by any means, electronic, mechanical photocopying, recording, or otherwise without prior permission of UL.

UL provides this Standard "as is" without warranty of any kind, either expressed or implied, including but not limited to, the implied warranties of merchantability or fitness for any purpose.

In no event will UL be liable for any special, incidental, consequential, indirect or similar damages, including loss of profits, lost savings, loss of data, or any other damages arising out of the use of or the inability to use this Standard, even if UL or an authorized UL representative has been advised of the possibility of such damage. In no event shall UL's liability for any damage ever exceed the price paid for this Standard, regardless of the form of the claim.

Users of the electronic versions of UL's Standards for Safety agree to defend, indemnify, and hold UL harmless from and against any loss, expense, liability, damage, claim, or judgment (including reasonable attorney's fees) resulting from any error or deviation introduced while purchaser is storing an electronic Standard on the purchaser's computer system.

Documents
Document Sharing Hub

Full document details: UL 199 2022

No Text on This Page

Documents
Document Sharing Hub

Full document details: UL 199 2022

ANSI/UL 199-2022

FEBRUARY 25, 2022

ANSI/CAN/UL/ULC 199:2022

Standard for Automatic Sprinklers for Fire-Protection Service

First Edition – December, 1919
Second Edition – February, 1966
Third Edition – December, 1967
Fourth Edition – October, 1969
Fifth Edition – May, 1974
Sixth Edition – September, 1977
Seventh Edition – July, 1982
Eighth Edition – February, 1990
Ninth Edition – December, 1995
Tenth Edition – April, 1997
Eleventh Edition – November, 2005
Twelfth Edition – April, 2020

Thirteenth Edition

February 25, 2022

This ANSI/CAN/UL/ULC Safety Standard consists of the Thirteenth Edition.

The most recent designation of ANSI/UL 199 as an American National Standard (ANSI) occurred on February 25, 2022. ANSI approval for a standard does not include the Cover Page, Transmittal Pages, Title Page, Preface or SCC Foreword.

This standard has been designated as a National Standard of Canada (NSC) on February 25, 2022.

COPYRIGHT © 2022 UNDERWRITERS LABORATORIES INC.

Documents
Document Sharing Hub

Full document details: UL 199 2022

No Text on This Page

Documents
Document Sharing Hub

Full document details: UL 199 2022

CONTENTS

Preface 7

INTRODUCTION

1 Scope 11
2 Components 11
3 Units of Measurements 11
4 Normative References 11
5 Glossary 12
6 Terminology 15

CONSTRUCTION

7 General 16
8 Inlet Threads 16
9 Temperature Ratings 17
10 Pressure Rating 17
11 Nominal “K” Factor 18
12 Coatings And Platings 18
13 Polymeric Residential Sprinklers 18

PERFORMANCE

GENERAL

14 Details 19
15 Samples 19

PHYSICAL STRENGTH AND LEAKAGE TESTS

16 Load on Heat Responsive Element Test 19
17 Strength Of Heat Responsive Element Test 19
17.1 Fusible-alloy types 19
17.2 Glass-bulb types 20
18 Glass-bulb Thermal Shock Test 20
19 Strength Of Frame Test 20
20 Impact Resistance Test 21
21 Impact Test for Protective Covers 23
22 Impact Test for Guards 24
23 Rough Usage Test 27
24 Flow Endurance Test 27
25 Leakage Test 27
26 Hydrostatic Strength Test 28
27 Dry Sprinkler Air Tightness Test 28
28 30-Day Leakage Test 30
29 Water Hammer Test 30
30 Vacuum Test 31

OPERATION TESTS

31 Operating Temperature (Bath) Test 31
32 Air Bath for Glass Bulb Sprinkler Test 32

AVA Documents
Document Sharing Hub

Full document details: UL 199 2022

33 Sensitivity Tests 32
33.1 General....32
33.2 Oven heat test....33
33.3 Room heat tests 38
34 Operation – Lodgement Test 46
35 Cycling Tests For Flow Control (FC) Sprinklers 48
35.1 Operational cycling test....48
35.2 Cycling after water exposure test 49
35.3 Contaminated-water cycling test 49

EXPOSURE AND CORROSION TESTS

36 High Temperature Exposure Test (90 Day) 49
37 High Temperature Exposure Test for Wax Coated Sprinklers 50
38 High Temperature Exposure Test For Flow Control (FC) Sprinklers 50
39 Heat Resistance Test....51
40 Elastomeric Parts Test 51
41 Vibration Test....51
42 Freezing Test 52
43 Evaporation Test for Wax Coatings 52
44 10-Day Corrosion Test 52
44.1 General....52
44.2 Salt spray exposure 53
44.3 Moist hydrogen sulfide air mixture 53
44.4 Moist carbon dioxide-sulfur dioxide air mixture 54
45 30-Day Corrosion Test 54
46 90-Day Moist Air Test....54
47 Exposure Tests on Sprinklers Incorporating Polymeric Gaskets 55
47.1 General....55
47.2 Corrosive exposures 55
47.3 Temperature cycling exposure 55
47.4 Hydrocarbon exposure followed by moist air exposure 55
47.5 Hydrocarbon exposure followed by water immersion exposure....55
47.6 Exposure to antifreeze solutions 56
48 Dry-Type Sprinkler Deposit Loading Test....56
49 Dezincification Test of Brass Parts 57
49.1 General....57
49.2 Reagent....57
49.3 Test pieces....57
49.4 Method 57
50 Stress-Corrosion Cracking of Brass Sprinkler Parts Test....58
51 Stress-Corrosion Cracking Of Stainless Steel Sprinkler Parts Test 58
52 Polymeric Residential Sprinkler Tests 59
52.1 General....59
52.2 Long-term hydrostatic pressure test 61
52.3 Temperature cycling test 61
52.4 Impact test 61

WATER FLOW AND DISTRIBUTION TESTS

53 Discharge Coefficient Test....62
54 Water Distribution Tests 65
54.1 General....65
54.2 Water distribution test – Conventional (old style) sprinklers 66
54.3 10 Pan distribution test....72
54.4 16 Pan distribution test....73

Documents
Document Sharing Hub
Full document details: UL 199 2022

54.5 100 Pan distribution test – Sidewall sprinklers (standard coverage) 76
54.6 Wall wetting test for ECLH sprinklers 78
54.7 Distribution tests for ECOH sprinklers 79
54.8 Residential sprinkler water distribution test – Horizontal surface 81
54.9 Residential sprinkler water distribution test – Vertical surface 86
54.10 Distribution tests for pendent ESFR sprinklers having a nominal K-factor of 14.0 or 16.8 89
54.11 Thrust force test for pendent ESFR sprinklers having a nominal K-factor of 14.0 or 16.8 91
54.12 Lateral discharge tests 93

FIRE TESTS

55 Fire Test Requirements 94
55.1 General 94
55.2 350 Pound (159 kg) wood crib fire test 95
55.3 ECLH sprinkler fire tests 101
55.4 ECOH sprinkler piled stock fire tests 106
55.5 Residential sprinkler fire test 109
55.6 Flow control (FC) sprinkler piled stock fire tests 118
55.7 CMDA storage sprinkler large scale fire tests 122
55.8 CMSA storage sprinkler large scale fire tests 135
55.9 ESFR sprinkler large scale fire tests 143
55.10 Actual delivered density (ADD) tests for pendent ESFR sprinklers having a nominal K-factor of 14.0 or 16.8 159
55.11 Fire tests for specific application sprinklers intended to protect windows 167
55.12 Fire tests for specific application sprinklers intended for use in horizontal concealed spaces 170

MANUFACTURING AND PRODUCTION TESTS

56 General 181
57 Production Leakage Test 181
58 Glass Bulb Integrity Test 181

MARKINGS

59 General 182

INSTALLATION INSTRUCTIONS

60 Manufacturer's Installation Instructions 183

ANNEX A (Informative)

A1 TOLERANCE LIMIT CALCULATION METHODS 186

ANNEX B (Informative)

Documents
Document Sharing Hub
Full document details: UL 199 2022

No Text on This Page

Documents
Document Sharing Hub

Full document details: UL 199 2022

Preface

This is the Thirteenth Edition of ANSI/CAN/UL/ULC 199, Standard for Automatic Sprinklers for Fire-Protection Service.

UL is accredited by the American National Standards Institute (ANSI) and the Standards Council of Canada (SCC) as a Standards Development Organization (SDO). ULC Standards is accredited by the Standards Council of Canada (SCC) as a Standards Development Organization (SDO).

This Standard has been developed in compliance with the requirements of ANSI and SCC for accreditation of a Standards Development Organization.

This ANSI/CAN/UL/ULC 199 Standard is under continuous maintenance, whereby each revision is approved in compliance with the requirements of ANSI and SCC for accreditation of a Standards Development Organization. In the event that no revisions are issued for a period of four years from the date of publication, action to revise, reaffirm, or withdraw the standard shall be initiated.

Annexes A and B, identified as Informative, are for information purposes only.

In Canada, there are two official languages, English and French. All safety warnings must be in French and English. Attention is drawn to the possibility that some Canadian authorities may require additional markings and/or installation instructions to be in both official languages.

This Thirteenth Edition Joint American National Standard and National Standard of Canada is based on, and now supersedes, the Twelfth Edition of UL 199 and the Second Edition of ULC/ORD-C199.

Comments or proposals for revisions on any part of the Standard may be submitted at any time. Proposals should be submitted via a Proposal Request in the On-Line Collaborative Standards Development System (CSDS) at https://csds.ul.com.

UL's Standards for Safety are copyrighted by UL. Neither a printed nor electronic copy of a Standard should be altered in any way. All of UL's Standards and all copyrights, ownerships, and rights regarding those Standards shall remain the sole and exclusive property of UL.

To purchase UL Standards, visit the UL Standards Sales Site at
http://www.shopulstandards.com/ HowToOrder.aspx or call tollfree 1-888-853-3503.

This Edition of the Standard has been formally approved by the UL Standards Technical Panel (STP) on Sprinkler Equipment For Fire Protection, STP 199.

This list represents the STP 199 membership when the final text in this standard was balloted. Since that time, changes in the membership may have occurred.

Documents
Document Sharing Hub

Full document details: UL 199 2022

STP 199 Membership

Name	Representing	Interest Category	Region
Joe Beagen	Flexhead Industries Inc.	Producer	USA
Kerry M. Bell	UL LLC	Testing & Stds Org	USA
Art Black	Carmel Fire Protection Associates	AHJ	USA
Chase Browning	Medford Fire Rescue	AHJ	USA
Ken Bush	Maryland State Fire Marshal's Office	AHJ	USA
Scott Franson	Viking Corp	Producer	USA
Diane J. Haithcock	Underwriters Laboratories	Chair	USA
Kevin Hall	American Fire Sprinkler Association	General Interest	USA
Daniel Kaiser	Minnesota Department of Public Safety	AHJ	USA
Brian Lane	Durham County Fire Marshal's Office	AHJ	USA
Rick McCullough	R McCullough	General Interest	Canada
Seyed Saeed Moosavidavar	Reinertsen A/S	Commercial/Industrial User	USA
Ryan Pavey	Cardinal Engineering Ltd.	General Interest	Canada
Maurice Pilette	Mechanical Designs Ltd.	General Interest	USA
Milosh Puchovsky	Worcester Polytechnic Institute	General Interest	USA
Scott Pugsley	Seneca College	General Interest	Canada
Richard Ray	Cybor Fire Protection Co.	Supply Chain	USA
Paul Sasser	Reliable Automatic Sprinkler Co Inc.	Producer	USA
Michael Savage	Marion Country, FL	AHJ	USA
Kevin Scott	KH Scott & Associates	AHJ	USA
David Sheppard	US Bureau of Alcohol Tobacco Firearms & Explosives	Government	USA
Manuel Silva	Johnson Controls Inc.	Producer	USA
Joseph Simone	US Navy	Government	USA
Juergen Teschner	Job GMBH	Producer	USA
Maarit Tuomisaari	Marioff Corp OY	Producer	USA
Tom Wancho	Victualic Co.	Producer	USA
Nicolette Weeks	Underwriters Laboratories	Project Manager	USA
Jingchuan Zheng	Shenzen Urban Public Safety and Technology Institute	Testing & Stds Org	China
Jeffrey Zwirn	IDS Research Development Inc.	Producer	USA

Documents
Document Sharing Hub
Full document details: UL 199 2022

International Classification for Standards (ICS): 13.220.01, 13.220.10, 13.220.20

For further information on UL standards, please contact:

Underwriters Laboratories Inc.
171 Nepean Street, Suite 400
Ottawa, Ontario K2P 0B4
Phone: 1-613.755.2729
E-mail: ULCStandards@ul.com
Web site: ul.org

This Standard is intended to be used for conformity assessment.

The intended primary application of this standard is stated in its scope. It is important to note that it remains the responsibility of the user of the standard to judge its suitability for this particular application.

CETTE NORME NATIONALE DU CANADA EST DISPONIBLE EN VERSIONS FRANÇAISE ET ANGLAISE

Documents
Document Sharing Hub

Full document details: UL 199 2022

No Text on This Page

Documents
Document Sharing Hub

Full document details: UL 199 2022

INTRODUCTION

1 Scope

1.1 These requirements cover automatic sprinklers including conventional, spray, sidewall, extended coverage, residential, certain specific application sprinklers and storage sprinklers including early suppression fast response (ESFR) intended for installation on sprinkler systems for fire-protection service. Requirements for the installation and use of sprinklers are included in the National Building Code of Canada, Standards for the Installation of Sprinkler Systems, NFPA 13; Installation of Sprinkler Systems in One- and Two-Family Dwellings and Manufactured Homes, NFPA 13D; and Installation of Sprinkler Systems in Low-Rise Residential Occupancies, NFPA 13R; as well as other applicable NFPA Standards.

1.2 The requirements in this standard are not intended to restrict the application of representative fire and other tests for special sprinklers, as referenced in Standard for the Installation of Sprinkler Systems, NFPA 13, that are intended to provide protection for specific fire hazards.

2 Components

2.1 Except as indicated in 2.2, a component of a product covered by this standard shall comply with the requirements for that component.

2.2 A component is not required to comply with a specific requirement that:

a) Involves a feature or characteristic not required in the application of the component in the product covered by this standard, or

b) Is superseded by a requirement in this standard.

2.3 A component shall be used in accordance with its rating established for the intended conditions of use.

2.4 Specific components are incomplete in construction features or restricted in performance capabilities. Such components are intended for use only under limited conditions, such as certain temperatures not exceeding specified limits, and shall be used only under those specific conditions.

3 Units of Measurements

3.1 Where values of measurement are specified in both SI and U.S. Customary units, it is the responsibility of the user of this standard to determine the unit of measurement appropriate for the user's needs.

4 Normative References

4.1 The following standards are referenced in this standard, and portions of these referenced standards may be essential for compliance.

American Society of Mechanical Engineers (ASME) Standards

ANSI/ASME B1.20.1, *Standard on Pipe Threads, General Purpose, Inch*

American Society for Testing and Materials (ASTM) Standards

ASTM B117, *Standard Practice for Operating Salt Spray (Fog) Apparatus*

Documents
Document Sharing Hub

Full document details: UL 199 2022

ASTM E11, *Standard Specification for Woven Wire Test Sieve Cloth and Test Sieves*

ASTM E1354, *Test Method for Heat and Visible Smoke Release Rates for Materials and Products Using an Oxygen Consumption Calorimeter*

National Fire Protection Association (NFPA) Codes and Standards

NFPA 13, *Standard for the Installation of Sprinkler Systems*

NFPA 13D, *Standard for the Installation of Sprinkler Systems in One- and Two-Family Dwellings and Manufactured Homes*

NFPA 13R, *Standard for the Installation of Sprinkler Systems in Low-Rise Residential Occupancies*

NFPA 30, *Flammable and Combustible Liquids Code*

NFPA 30B, *Code for the Manufacture and Storage of Aerosol Products*

National Research Council Canada

National Building Code of Canada

UL Standards

UL 9, *Standard for Fire Tests of Window Assemblies*

UL 157, *Standard for Gaskets and Seals*

UL 723, *Standard for Test for Surface Burning Characteristics of Building Materials*

UL 746C, *Standard for Polymeric Materials – Use in Electrical Equipment Evaluations*

ULC Standards

CAN/ULC-S102, *Method of Test for Surface Burning Characteristics of Building Materials and Assemblies*

CAN/ULC-S136, *Standard Method of Fire Test of Sprinkler Protected Window Systems*

5 Glossary

5.1 For the purpose of this standard the following definitions apply:

5.2 ACTUAL DELIVERED DENSITY (ADD) – The rate at which water, discharged from a sprinkler, is actually deposited onto the top of the protected horizontal surface under a fire condition.

5.3 ASSEMBLY LOAD – The extension force applied to the sprinkler frame by the assembly of its operating mechanism.

5.4 AUTOMATIC SPRINKLER – A sprinkler intended to open automatically by operation of a heat-responsive element that maintains the discharge orifice closed by means such as the exertion of pressure on a cap (button or disc). A sprinkler is installed on piping so that a spray of water is discharged in a specific pattern for suppression or control of fires.

AVA Documents
Document Sharing Hub

Full document details: UL 199 2022

5.5 CEILING SPRINKLER – See Concealed Ceiling Sprinkler (5.7), Flush Ceiling Sprinkler (5.18) and Recessed Ceiling Sprinkler (5.28).

5.6 COATED, PAINTED, OR PLATED SPRINKLER – A sprinkler that has factory applied coatings, paint, or platings for corrosion protection or decorative purposes.

5.7 CONCEALED CEILING SPRINKLER – A sprinkler assembly having a cover plate.

5.8 CONTROL MODE DENSITY AREA (CMDA) STORAGE SPRINKLER FOR STANDARD COVERAGE AREAS – A sprinkler intended to be installed using standard coverage areas and density/area criteria referenced in NFPA 13.

5.9 CONTROL MODE SPECIFIC APPLICATION (CMSA) STORAGE SPRINKLER – A sprinkler intended for the protection of stored commodities as referenced in NFPA 13 or the end use limitations specified for the product.

5.10 CONVENTIONAL (OLD STYLE) SPRINKLER – A sprinkler intended for installation in the upright or pendent position, that directs from 40 to 60 % of the total water initially discharged in the downward direction.

5.11 DISCHARGE COEFFICIENT "K" – Coefficient of discharge in the formula,

$$K = \frac{Q}{\sqrt{P}}$$

in which:

Q is the flow in gpm, and

p is the pressure in lbf/in^2 gauge (psig).

In SI units:

Q is the flow in l/min; and

p is the pressure in bar.

5.12 DRY-TYPE SPRINKLER – A sprinkler secured in an extension nipple that has a seal at the inlet end to prevent water from entering the nipple until the sprinkler operates. These sprinklers consist of an upright, pendent, sidewall, flush, or other types.

Note: Dry-type ESFR sprinklers are intended for use on wet systems only since ESFR sprinklers are not intended for use in dry systems as referenced in NFPA 13.

5.13 EARLY-SUPPRESSION FAST-RESPONSE (ESFR) SPRINKLER – A quick responding sprinkler that automatically discharges water over a specified area to provide early suppression of a fire.

5.14 EXTENDED COVERAGE SPRINKLER INTENDED FOR LIGHT HAZARD OCCUPANCIES (ECLH) – A sprinkler having a specified area of coverage which is larger than the standard sprinkler coverage areas and is intended for use in light hazard occupancies described in NFPA 13.

5.15 EXTENDED COVERAGE SPRINKLER INTENDED FOR ORDINARY HAZARD OCCUPANCIES (ECOH) – A sprinkler having a specified area of coverage which is larger than the standard sprinkler coverage areas and is intended for use in ordinary hazard occupancies described in NFPA 13.

AVA Documents
Document Sharing Hub
Full document details: UL 199 2022

5.16 EXTENDED COVERAGE CONTROL MODE DENSITY AREA (CMDA) STORAGE SPRINKLER – A sprinkler intended to be installed using the extended coverage area and density/area criteria referenced in NFPA 13.

5.17 FLOW CONTROL (FC) SPRINKLER – A sprinkler that is intended to control water flow by automatically cycling open and closed within a specified temperature range.

5.18 FLUSH CEILING SPRINKLER – A sprinkler in which all or part of the body is mounted above the lower plane of the ceiling (or beyond a wall for sidewall sprinklers), but all of the heat responsive collector is below the lower plane of the ceiling (or beyond a wall for sidewall sprinklers).

5.19 HEAT RESPONSIVE ELEMENT – That portion of a sprinkler that breaks, melts, or otherwise functions to initiate the automatic operation of the sprinkler when exposed to sufficient heat.

5.20 HEPTANE – Commercial grade heptane having the following characteristics:

a) Minimum Initial Boiling Point of 190 °F (88 °C);

b) Maximum Dry Point of 212 °F (100 °C); and

c) Specific Gravity (60 °F/60 °F) (15.6 °C/15.6 °C) of 0.68 – 0.73.

5.21 OPEN SPRINKLER – An automatic sprinkler with the heat responsive and activating elements removed. The discharge orifice is open.

5.22 OPERATING TEMPERATURE – The temperature at which the heat responsive element of a sprinkler operates when immersed in a liquid bath under controlled rate of rise conditions.

5.23 ORIFICE – The opening that controls the amount of water discharged from a sprinkler at a given pressure.

5.24 PENDENT SPRINKLER – A sprinkler intended to be installed so that its deflector is located below the orifice and the water flows downward against the deflector.

5.25 QUICK RESPONSE-EXTENDED COVERAGE LIGHT HAZARD OCCUPANCY SPRINKLER – A sprinkler that complies with the applicable requirements for such sprinklers in the Sensitivity Tests, Section 33, when tested and installed in a test room at greater than standard spacings as stated in the installation instructions and complies with the requirements for extended coverage light hazard occupancy sprinklers.

5.26 QUICK RESPONSE-EXTENDED COVERAGE ORDINARY HAZARD OCCUPANCY SPRINKLER – A sprinkler that complies with the applicable requirements for such sprinklers in the Sensitivity Tests, Section 33, when tested and installed in a test room at greater than standard spacings as stated in the installation instructions and complies with the requirements for extended coverage ordinary hazard occupancy sprinklers.

5.27 QUICK RESPONSE (QR) SPRINKLER – A sprinkler that complies with the applicable requirements for such sprinklers in the Sensitivity Tests, Section 33, and that is intended to be installed at standard spacings.

5.28 RECESSED CEILING SPRINKLER – A sprinkler assembly in which all or part of the sprinkler body or frame, other than the inlet thread, is mounted within a recessed housing.

5.29 RESIDENTIAL SPRINKLER – A sprinkler intended to be installed in residential occupancies.

AVA Documents
Document Sharing Hub

Full document details: UL 199 2022

5.30 RESPONSE TIME INDEX (RTI) – A measure of the thermal sensitivity of the sprinkler's heat responsive element.

5.31 SIDEWALL SPRAY SPRINKLER – A sprinkler intended for installation on or near the wall and near the ceiling, and designed to discharge most of the water away from the nearby wall with a small portion of the discharge directed at the wall behind the sprinkler.

5.32 SPECIFIC APPLICATION SPRINKLERS – A sprinkler intended for a limited end use such as for protecting windows, combustible concealed spaces or attics.

5.33 SPRAY SPRINKLER (STANDARD) – A sprinkler intended for installation in either the upright or pendent position respectively, designed to distribute water downward in an umbrella-shaped pattern. The discharge from a spray sprinkler having a nominal 5.6 (80) “K” factor covers a circle 16 ft (4.88 m) in diameter, 4 ft (1.22 m) below the sprinkler, when the sprinkler is discharging water at the rate of 15 gpm (57 l/min). See 10 Pan Distribution Test, 54.3.

5.34 STANDARD FIRE TEST COMMODITY – CARTONED GROUP A PLASTICS (UNEXPANDED) – Single wall corrugated cardboard cartons measuring a nominal 21 by 21 by 20.5 in high (530 by 530 by 520 mm) containing 125 crystalline polystyrene cups in separate compartments within the carton. Single wall corrugated cardboard sheets are used to separate the five layers of cups and interlocking single wall corrugated cardboard vertical dividers are used to separate the 25 cups in each layer. Eight of the cartons are arranged in a 2 x 2 x 2 array with the open end of the cups facing down and placed on a nominal 42 by 42 by 5 in high (1070 by 1070 by 127 mm) two-way hardwood pallet.

5.35 STANDARD FIRE TEST COMMODITY – CLASS II Double tri-wall corrugated cardboard cartons with five-sided steel (open bottom) stiffeners inserted for stability. The cartons are to comply with the requirements for Class 2, Style E, “AAA” fluting as specified in the Federal Specification for Boxes, Fiberboard, Corrugated, Tri-Wall, PPP-B-640D. The two cartons have a combined nominal thickness of 1 in (25 mm). The a nominal measurements for the outside carton are 42 by 42 by 42 in (1070 by 1070 by 1070 mm) and the nominal measurements for the inside carton are 41 by 41 by 41 in (1040 by 1040 by 1040 mm). The cartons are to be placed on a nominal 42 by 42 by 5 in high (1070 by 1070 by 127 mm) two-way hardwood pallet.

5.36 STORAGE SPRINKLER – See Control Mode Density Area (CMDA) Storage Sprinkler for Standard Coverage Areas (See 5.8), Control Mode Specific Application (CMSA) Storage Sprinkler (5.9), Early-Suppression Fast-Response (ESFR) Sprinkler (5.13) and Extended Coverage Control Mode Density Area (CMDA) Storage Sprinkler (5.16).

5.37 UPRIGHT SPRINKLER – A sprinkler intended to be installed so that its deflector is located above the orifice and the water flows upward against the deflector.

6 Terminology

6.1 Where these requirements reference “automatic sprinkler”, the requirements apply to any type of sprinkler unless otherwise specified.

6.2 Where these requirements reference "extended coverage sprinklers", the requirements apply to any type of extended coverage sprinkler unless otherwise specified.

Documents
Document Sharing Hub
Full document details: UL 199 2022

CONSTRUCTION

7 General

7.1 An automatic sprinkler shall be constructed to effect closure of its water seat for extended periods of time without leakage and to open as intended and release all parts as specified in this standard. The closure of the water seat shall not be achieved by the use of a dynamic O-ring or similar seal (an O-ring or similar seal that moves during operation or is in contact with a component that moves during operation).

7.2 For dry-type pendent and sidewall sprinklers, the connection of the extension nipple to the seal assembly at the inlet shall be airtight. See Dry Sprinkler Air Tightness Test, Section 27.

7.3 Stampings shall show no cracking or splitting and shall be uniformly smooth and clean cut.

7.4 An automatic sprinkler shall be chemically or mechanically staked to maintain the manufacturer's assembly load. The assembly load shall not be able to be changed by the use of common hand tools without causing visible damage to the sprinkler.

7.5 Sprinkler types or materials not anticipated by these requirements require additional evaluation, such as tests to investigate special metallic or nonmetallic materials.

7.6 An escutcheon for sprinklers other the polymeric residential sprinklers shall be constructed of a metallic material.

7.7 When installed with the intended fittings specified in the installation instructions, see Manufacturer’s Installation Instructions, Section 60, dry sprinklers installed in dry systems shall be constructed to minimize the potential to accumulate water, scale, and sediment on the sprinkler inlet and shall provide an unobstructed flow path upon operation.

7.8 For sprinklers incorporating a glass bulb heat responsive element, the filling end tip of the bulb shall be completely encased in an enclosure to minimize the potential for breakage or damage. For the purposes of applying this requirement, a bulb tip within the waterway of a dry type sprinkler shall be considered enclosed.

7.9 Sprinklers with glass bulb type heat responsive elements shall be equipped with protective covers that are designed to remain in place during installation and be removed before the sprinkler system is placed in service.

Exception: Certain sprinkler designs, such as sprinklers with guards, concealed, intermediate level, wax coated and dry type sprinklers, may not be required to have protective covers.

7.10 Sprinklers required to be equipped with sprinkler covers shall comply with Impact Test for Protective Covers, Section 21 and 59.12.

8 Inlet Threads

8.1 Sprinklers shall be provided with external pipe threads at the inlet end as specified in Table 11.1. Inlet-end pipe threads shall comply with the Standard on Pipe Threads, General Purpose, Inch, ANSI/ASME B1.20.1.

Exception No. 1: Dry-type sprinklers shall be permitted to be provided with larger external NPT pipe threads.

Documents
Document Sharing Hub
Full document details: UL 199 2022

Exception No. 2: Internal taper pipe threads (NPT) of 3/4- or 1-in size shall be permitted to be used for an 8.0 nominal "K" factor, ceiling, and dry type sprinklers in lieu of those specified in Table 11.1.

Exception No. 3: Sprinklers intended for use in installations where sprinkler fittings incorporate pipe threads other than NPT type threads shall be permitted to be provided with pipe threads complying with a national pipe thread standard compatible with those fittings.

Exception No. 4: Sprinkler inlets intended for attachment to piping by means other than threads are able to be used when the sprinklers:

a) Have a nominal "K" factor corresponding to the discharge coefficient as specified in Table 11.1;

b) Are provided with nominal "K" factor markings as specified in 59.2; and

c) Are intended to be attached in a manner that does not involve welding and that permits sprinkler removal from sprinkler piping without the use of special tools or torch cutting equipment.

8.2 Threads shall be clean cut and true and free from burrs, scoring, or chatter marks.

9 Temperature Ratings

9.1 The temperature ratings, temperature classifications, and color codings of automatic sprinklers shall be as specified in Table 9.1. See 59.6.

Table 9.1
Temperature Ratings, Classifications, and Color Codings

Temperature classification	Temperature rating		Color code		Maximum ceiling temperature	
	°F	(°C)	Sprinkler	Glass bulb	°F	(°C)
Ordinary	135 – 170	(57 – 77)	Uncolored or Black	Orange – 135 °F (57 °C) Red – 155 °F (68 °C)	100	(38)
Intermediate	175 – 225	(79 – 107)	White	Yellow – 175 °F (79 °C) Green – 200 °F (93 °C)	150	(66)
High	250 – 300	(121 – 149)	Blue	Blue	225	(107)
Extra high	325 – 375	(163 – 191)	Red	Purple	300	(149)
Very extra high	400 – 475	(204 – 246)	Green	Black	375	(191)
Ultra high	500 – 575	(260 – 302)	Orange	Black	475	(246)

9.2 Residential and ESFR sprinklers shall have a temperature rating that falls within the range of the ordinary or intermediate classification.

10 Pressure Rating

10.1 Sprinklers other than storage and ESFR sprinklers shall have a rated pressure of 175 psig (1.2 Mpa), 250 psig (1.7 Mpa), or 300 psig (2.1 Mpa). Storage and ESFR sprinklers shall have a rated pressure of 175 psig (1.2 Mpa).

10.2 The discharge pressure associated with a rated flow for any sprinkler shall not be less than 7 psig (48 kPa).

Documents
Document Sharing Hub
Full document details: UL 199 2022

11 Nominal "K" Factor

11.1 Sprinklers other than residential sprinklers and dry sprinklers in lengths longer than the minimum, shall have a discharge coefficient complying with one of the nominal "K" factor ranges specified in Table 11.1. The nominal "K" factor is to be determined from the discharge coefficient "K", as specified by the Discharge Coefficient Test, Section 53.

Table 11.1
Nominal "K" factor and thread size

Nominal K-factor, gpm/(psi)$^{1/2}$(L/min/(bar)$^{1/2}$)	Discharge coefficient "K"		External thread-type
	gpm/(psi)$^{1/2}$	(L/min/(bar)$^{1/2}$)	in NPT
1.4 (20)	1.3 – 1.5	(19 – 22)	1/2
1.9 (27)	1.8 – 2.0	(26 – 29)	1/2
2.8 (40)	2.6 – 2.9	(38 – 42)	1/2
4.2 (57)	4.0 – 4.4	(59 – 64)	1/2
5.6 (80)	5.3 – 5.8	(76 – 84)	1/2
8.0 (115)	7.4 – 8.2	(107 – 118)	3/4 or 1/2[+]
11.2 (160)	10.7 – 11.7	(159 – 166)	3/4 or 1/2[+]
14.0 (200)	13.5 – 14.5	(195 – 209)	3/4
16.8 (240)	16.0 – 17.6	(231 – 254)	3/4
19.6 (280)	18.6 – 20.6	(272 – 301)	1
22.4 (320)	21.3 – 23.5	(311 – 343)	1
25.2 (360)	23.9 – 26.5	(349 – 387)	1
28.0 (400)	26.6 – 29.4	(389 – 430)	1

[+] The 1/2 in NPT inlet thread for these sprinklers are for use in existing facilities (retrofit) only as referenced in NFPA 13.

11.2 The diameter of a discharge orifice or any internal passage of a sprinkler shall be at least 0.21 in (5.3 mm).

11.3 Sprinklers intended for use in dry or pre-action systems shall have a "K" factor greater than 4.0.

12 Coatings And Platings

12.1 The operation and distribution characteristics of a sprinkler shall not be impaired by the application of any factory applied coating, paint, or plating when the sprinkler is tested in accordance with these requirements.

12.2 A corrosion resistant coating or plating shall be uniformly applied.

12.3 A wax coating shall not be brittle when new nor become brittle with age.

13 Polymeric Residential Sprinklers

13.1 Residential sprinklers having pressure retaining and other load bearing components made of polymeric materials shall be constructed to comply with the following:

a) Requirements described within this standard that are applicable to residential sprinklers.

AVA Documents
Document Sharing Hub
Full document details: UL 199 2022

b) Sprinklers that have polymeric gaskets and no additional pressure retaining or load bearing polymeric components are not limited to the use restrictions described in 13.2 and 13.3.

13.2 Polymeric materials used to construct pressure retaining and load bearing components shall be constructed in such a manner that the polymeric materials do not extend into the area being protected by the sprinkler unless covered with a metallic material such as brass, bronze or stainless steel.

13.3 The manufacturer's installation instructions shall indicate that the polymeric sprinklers are to be installed in NFPA 13D applications and attached to sprinkler systems constructed of plastic sprinkler pipe and fittings only. See Section 60.

PERFORMANCE

GENERAL

14 Details

14.1 To determine compliance with these requirements, the various types and patterns of a sprinkler shall be subjected to the applicable performance tests described herein.

14.2 When a recessed or concealed sprinkler is tested with an escutcheon and cover plate (as applicable) during the performance tests, the sprinkler is to be recessed to the maximum depth allowed by the sprinkler/escutcheon combination.

15 Samples

15.1 The number of samples required for investigation varies for different sprinkler types. The number of samples required for examination and test are to be determined following a review of detailed drawings, examination of a preliminary sample, or both.

PHYSICAL STRENGTH AND LEAKAGE TESTS

16 Load on Heat Responsive Element Test

16.1 The average and maximum design loads exerted on the heat responsive element, and the overall load tolerance based on the design load for the assembly, are to be determined. When the application of the rated working pressure to the inlet end of the sprinkler increases the assembly load by more than 10 %, the additional load is to be added to the measured load on the heat responsive element. The information developed is to be used for Strength of Heat Responsive Element Test, Section 17.

16.2 At least 25 sprinklers are to be tested to determine the average load. An arrangement for measuring the load on the heat responsive element is to be developed for each specific design.

17 Strength Of Heat Responsive Element Test

17.1 Fusible-alloy types

17.1.1 A heat responsive element in the ordinary temperature rating shall either:

a) Sustain a load of 15 times its maximum design load for a period of 100 h; or

b) Demonstrate the ability to sustain the maximum design load when tested in accordance with 17.1.2 and 17.1.3.

AVA Documents
Document Sharing Hub
Full document details: UL 199 2022

17.1.2 Compliance with 17.1.1(a) is to be determined by subjecting at least ten sample heat responsive elements to a load of 15 times the maximum design load for at least 100 h. Compliance with 17.1.1(b) is to be determined by subjecting sample heat-responsive elements to loads in excess of the maximum design load. A minimum of ten samples are to be loaded at various values as required up to 15 times the design load. At least one heat responsive element shall sustain a load for a time greater than 1000 h. These load and time values shall then be used to derive a least-square, full logarithmic regression curve of load as a function of time, from which the loads at 1 h and 1000 h are to be determined. The design load shall comply with the following equation:

$$L_d \leq 1.02\, L^2{}_m / L_o$$

in which:

L_d is the maximum design load;

L_m is the load at 1 h; and

L_o is the load at 1 h.

17.1.3 The test samples are to be loaded at a conditioned temperature of 70 ±5 °F (21 ±3 °C).

17.2 Glass-bulb types

17.2.1 The lower tolerance limit for bulb strength, based on calculations with a degree of confidence of 0.99 for 99 % of samples, shall exceed two times the upper tolerance limit for sprinkler assembly load based on calculations with the same degree of precision as for bulb strength.

17.2.2 The bulb strength is to be measured by applying a steadily increasing load, utilizing a compression testing machine, until the bulb breaks. This test is to be conducted with the bulb mounted in the seating parts, with the same dimensions used in the sprinkler and a material hardness within the range of 38 – 50 Rockwell C. The rate of loading shall not exceed 55 lbf load per s (25 kg/s), or at a rate that deflects the bulb 0.02 in (0.51 mm) per min, whichever measurement is convenient for the test apparatus being used. Bulb seats shall be permitted to be reinforced circumferentially to not interfere with the bulb breakage. A minimum of 15 samples of each temperature rating and each bulb type are to be tested. See Annex A.

17.2.3 Calculations are to be based on the Normal or Gaussian Distribution except where another distribution is shown to be more applicable due to manufacturing or design factors.

18 Glass-bulb Thermal Shock Test

18.1 A sprinkler having a glass bulb shall withstand the thermal shock of rapid temperature changes without breakage or fracture of the glass bulb when tested as specified in 18.2.

18.2 At least five samples of the sprinkler are to be conditioned for 5 min in a liquid bath at 20 °F (11 °C) less than the marked temperature rating. The samples then are to be removed and immediately submerged in another liquid bath at 50 °F (10 °C). The bulb of each sprinkler shall be visually observed for signs of breakage or fracture.

19 Strength Of Frame Test

19.1 An automatic sprinkler frame shall not show permanent deformation in excess of 0.2 % of the distance between its bearing points when subjected to a test loading of twice its assembly load at rated hydrostatic pressure.

AVA Documents
Document Sharing Hub
Full document details: UL 199 2022

19.2 The distance between load-bearing points is to be measured to the nearest 0.001 in (0.03 mm) from the plane of the sprinkler-orifice outlet at the center of the orifice to the center of the compression bearing surface.

19.3 At least ten sprinkler samples are to be individually installed in a test apparatus that applies a load to the upper compression bearing surface. A measuring instrument is to be attached to indicate the amount of deflection at the deflector end of the sprinkler frame.

19.4 With the threaded inlet restrained from movement, a measuring instrument is to be positioned to indicate the amount of deflection at the deflector end of the sprinkler frame. The heat responsive element of the sample is then to be carefully removed so as not to damage the frame. The negative axial deflection, due to release of the assembly load, is to be recorded. A force is then to be applied to re-deflect the sprinkler at a rate of 0.02 in (0.51 mm) per min until the deflection returns to zero. The force at zero deflection is to be recorded as the assembly load. An alternate means of determining assembly load shall be permitted to be utilized when determined to provide equivalent or more accurate results.

19.5 A force equal to twice the sum of the force recorded in 19.4 plus the force applied to the sprinkler frame at rated pressure is then to be applied to each sample and held for not more than 5 s. The deflection during the application of this load and the amount of permanent set after the load has been released are to be determined. The percentage of permanent deformation (elongation) shall be calculated using the measured permanent deflection and the minimum distance measured between load bearing points to verify compliance with the requirements in 19.1.

20 Impact Resistance Test

20.1 An automatic sprinkler, except for dry type sprinklers, shall not be damaged or leak when tested as described in 20.2. See Figure 20.1.

20.2 Five sample sprinklers are to be tested by dropping a cylindrical mass equivalent to the mass of the sprinkler to the nearest 15 g increment from a height of one meter onto the geometric center of the deflector, or when this is not practicable such as with a concealed or flush type sprinkler, onto the butt end of the sprinkler. The mass is to be prevented from impacting more than once upon each sample. Following the impact, each sprinkler is to be visually examined and there shall be no evidence of cracks, breaks, or any other damage. Each sample sprinkler shall then be subjected to the Leakage Test, Section 25, followed by the applicable testing in Sensitivity Tests, Section 33 based upon sprinkler type.

Documents
Document Sharing Hub
Full document details: UL 199 2022

Figure 20.1

Impact test apparatus

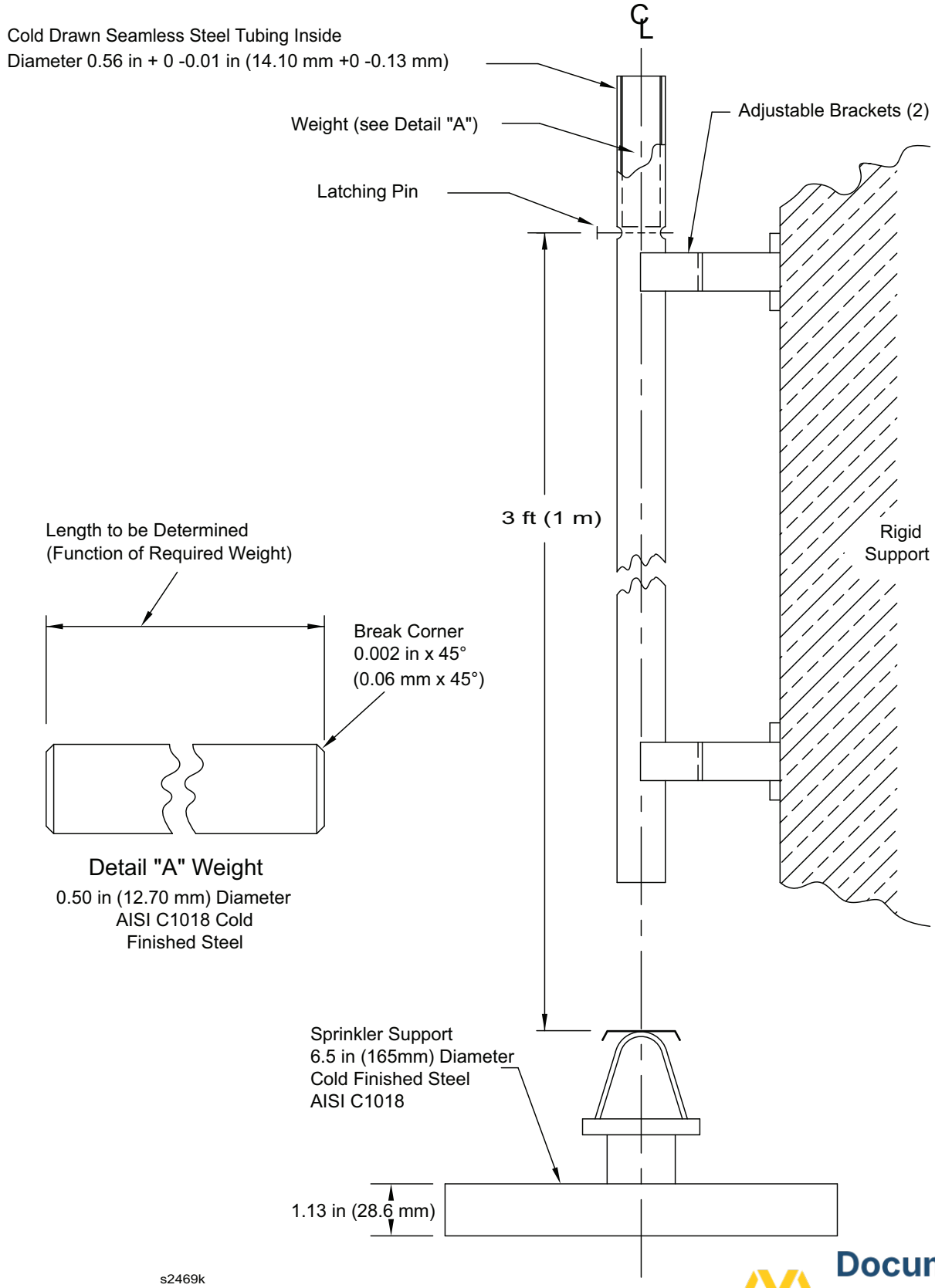

Documents
Document Sharing Hub
Full document details: UL 199 2022

21 Impact Test for Protective Covers

21.1 A glass bulb type sprinkler, with the protective cover installed, shall not be damaged or leak and the cover shall remain in place when tested as described in 21.2. See Figure 21.1.

Figure 21.1

Impact test apparatus for protective covers

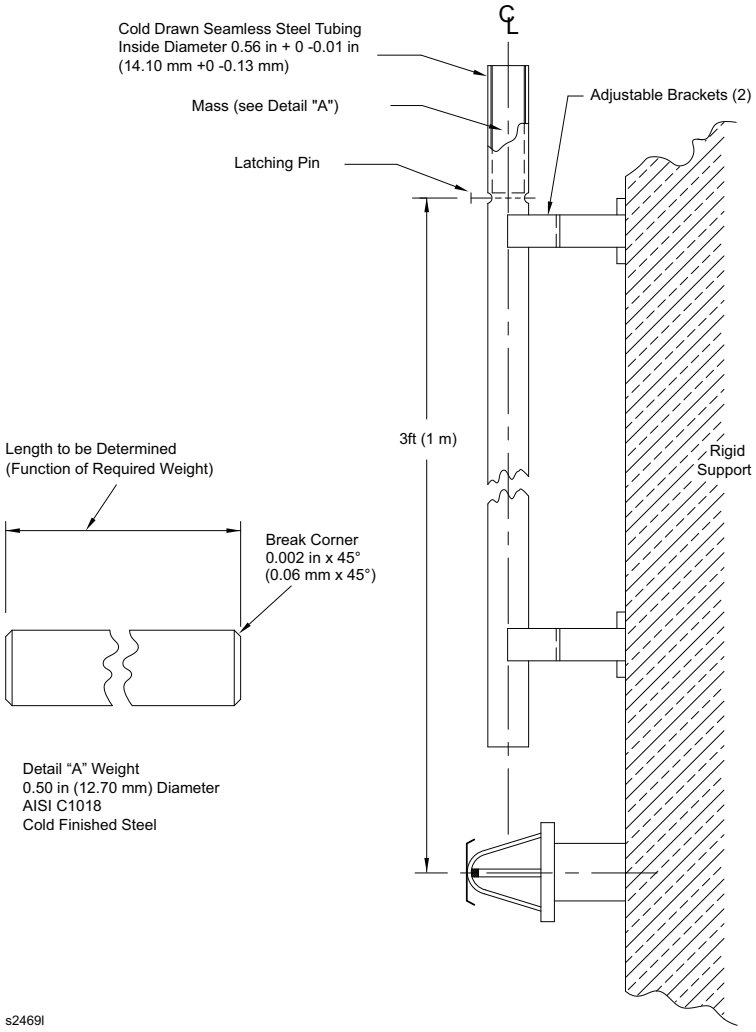

Lorem ipsum

Documents
Document Sharing Hub
Full document details: UL 199 2022

21.2 Five sample glass bulb sprinklers with their protective covers are to be mounted in the horizontal position and impacted with a cylindrical mass equivalent to the mass of the sprinkler to the nearest 15 g increment from a height of one meter onto the geometric center of the glass heat responsive element. Five additional samples are to be tested with the impact applied to the opposite side of the sprinkler if the cover is designed to provide unsymmetrical protection. If the glass bulb extends beyond the perimeter of the sprinkler deflector, an additional five sample sprinklers are to be mounted in the vertical position and impacted with the same cylindrical mass from a height of one meter onto the geometric center of the glass heat responsive element. The mass is to be prevented from impacting more than once upon each sample. Following the impact, each sprinkler is to be visually examined and there shall be no evidence of cracks, breaks, or any other damage to the glass bulb. Each sample sprinkler shall then be subjected to the Leakage Test, Section 25. In addition, each sample shall then be subjected to the applicable testing in Sensitivity Tests, Section 33 based upon sprinkler type.

22 Impact Test for Guards

22.1 Sprinkler and guard assemblies subjected to the tests described in 22.2 – 22.5, shall:

a) Show no evidence of visual damage to the sprinkler; and

b) Comply with the Operation – Lodgement Test, Section 34.

22.2 Twelve sample sprinklers are to be assembled with their intended guard in accordance with the manufacturers installation instructions and divided into two groups of six assemblies in each group.

22.3 Samples from the first group are to be tested individually by dropping a 1.18 lb (0.54 kg), 2 in (50.8 mm) in diameter stainless steel ball (Series 440) from a height of 2.5 ft (0.76 m) onto the end of the assembly as shown in Figure 22.1. Samples from the second group are to be tested individually by dropping the ball onto the side, near the top of the guard as shown in Figure 22.2.

Documents
Document Sharing Hub
Full document details: UL 199 2022

Figure 22.1

Impact test on first group of samples

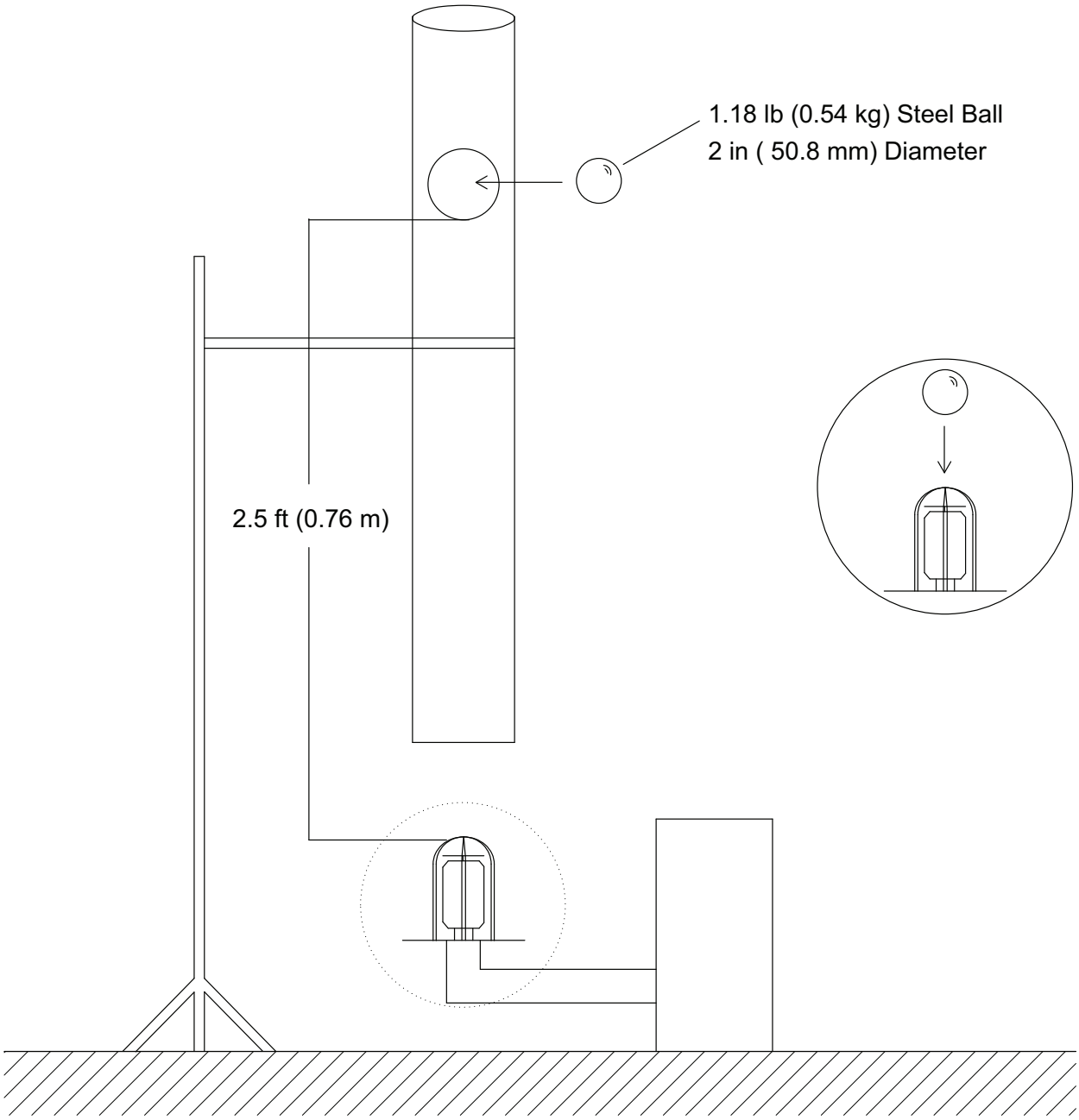

sm1184b

Documents
Document Sharing Hub
Full document details: UL 199 2022

Figure 22.2

Impact test on second group of samples

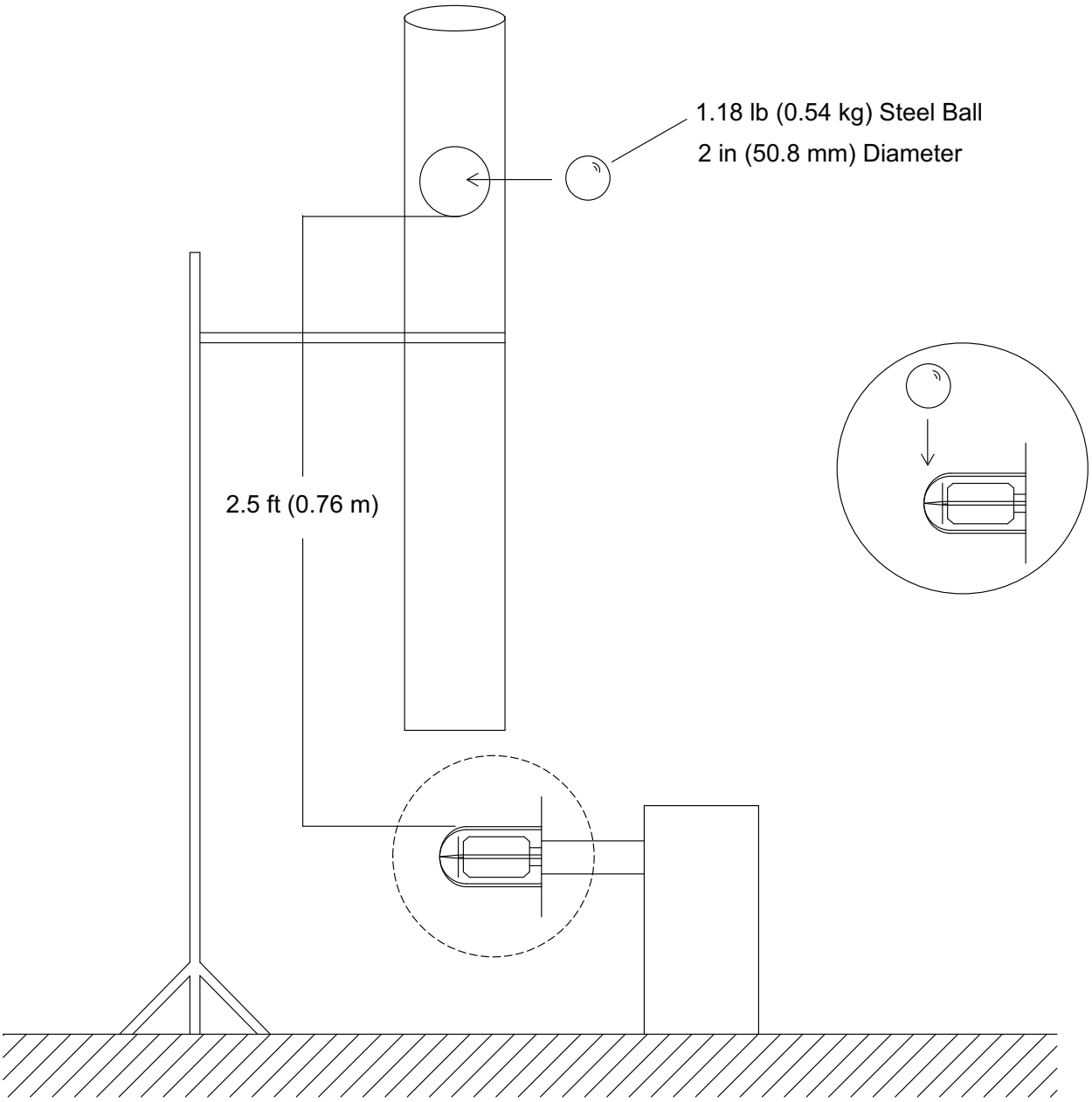

sm1185b

Documents
Document Sharing Hub
Full document details: UL 199 2022

22.4 Impact due to falling steel ball in both cases shall be located between support members of the guard.

22.5 After impact, the sprinkler samples shall be visually examined for damage. The samples are then subjected to the Operation – Lodgement Test, Section 34 except that one sample from each group is to be tested using the double feed arrangement at each of following inlet six pressures: 25 (172), 50 (345), 75 (517), 100 (689), 125 (862) and 150 (1206) psig (kPa).

23 Rough Usage Test

23.1 An automatic sprinkler, except for dry-type sprinklers, shall withstand the effects of rough usage without deterioration of its performance characteristics. Following 3 min of tumbling as described in 23.3, the sprinkler shall comply with the Leakage Test, Section 25, and the Sensitivity Tests, Section 33 based upon the sprinkler type.

23.2 Five sample sprinklers are to be tested. The sprinklers are to be tested with a shipping protector in place when the protector is intended to be removed from the sprinkler after the sprinkler is installed and reference to this removal requirement is made in the installation instructions.

23.3 Five samples are to be individually placed in a vinyl-lined right hexagonal prism-shaped drum[a] designed to provide a tumbling action. The drum is to have an axis of rotation of 10 in (254 mm). The distance between opposite sides is to be 12 in (305 mm). For each test, one sample and five 1-1/2-in (38.1-mm) hardwood cubes are to be placed in the drum. The drum is to be rotated at 1 revolution per s for 3 min. The sample is to be removed from the drum, examined for signs of damage, and then subjected to the Leakage Test, Section 25, and to the Sensitivity Tests, Section 33.

[a] A drum acceptable for this test is available from Kramer Industries, Inc., Copiague, NY 11726, Model K1401.

24 Flow Endurance Test

24.1 An automatic sprinkler shall withstand for 30 min, without evidence of cracking, deformation, or separation of any part, a waterflow at a pressure equal to the rated pressure plus 25 psig (172 kPa).

24.2 One sample of an automatic sprinkler is to be installed in its intended installation orientation on an elbow or tee for dry type sprinklers in a pressurized water system having a supply pipe with a minimum nominal diameter of 1-1/2 in (40 mm). For concealed type sprinklers, the deflector support pins shall be orientated parallel to the supply pipe. The heat responsive element of the sprinkler is to be activated at the specified test pressure, and the water flow shall be adjusted to obtain the specified test pressure for 30 min.

25 Leakage Test

25.1 When tested as described in 25.2 and 25.3, an automatic sprinkler shall not exhibit leakage at any pressure from 0 to the applicable leakage test pressure shown in Table 25.1.

Documents
Document Sharing Hub
Full document details: UL 199 2022

Table 25.1
Test Pressures for the Leakage and Hydrostatic Tests

Rated pressure		Leakage test pressure		Hydrostatic test pressure	
psig	(MPa)	psig	(MPa)	psig	(MPa)
175	(1.2)	500	(3.4)	700	(4.8)
250	(1.7)	500	(3.4)	1000	(6.9)
300	(2.1)	600	(4.1)	1200	(8.3)

25.2 At least 20 samples are to be individually tested. The sprinkler inlets are to be filled with water and vented of air.

25.3 The pressure is to be increased from 0 to the test pressure at a rate not exceeding 300 psig (2.07 MPa) per min and then held for 1 min at the pressure specified in Table 25.1. There shall be no visible leakage in any sample.

26 Hydrostatic Strength Test

26.1 An automatic sprinkler shall withstand, for 1 min, without rupture, an internal hydrostatic pressure equal to the hydrostatic test pressure shown in Table 25.1.

26.2 The samples from the Leakage Test, Section 25, are to be used for this test.

26.3 The sprinkler inlets are to be filled with water and vented of air. The pressure is to be increased from 0 to the hydrostatic test pressure shown in Table 25.1 at a rate not exceeding 300 psig (2.07 MPa) per min. The pressure is to be maintained at the test pressure and held for 1 min. The sample shall not rupture, operate, or release any of its operating parts during the pressure increase nor while being maintained at the test pressure for 1 min.

27 Dry Sprinkler Air Tightness Test

27.1 When tested as described in 27.2 and 27.3, the connection of the extension nipple to the inlet seal assembly for a dry-type pendent or sidewall sprinkler shall not exhibit leakage at any air pressure from 0 to 15 psig (0 to 103 kPa) when the pressure is applied externally to this connection.

27.2 At least five samples of the minimum length are to be individually tested. The assembly is to be installed in an air leakage test fixture in such a manner that the extension nipple connection to the inlet seal assembly can be fully pressurized with air. See Figure 27.1.

Documents
Document Sharing Hub
Full document details: UL 199 2022

Figure 27.1

Dry sprinkler air tightness test apparatus (typical)

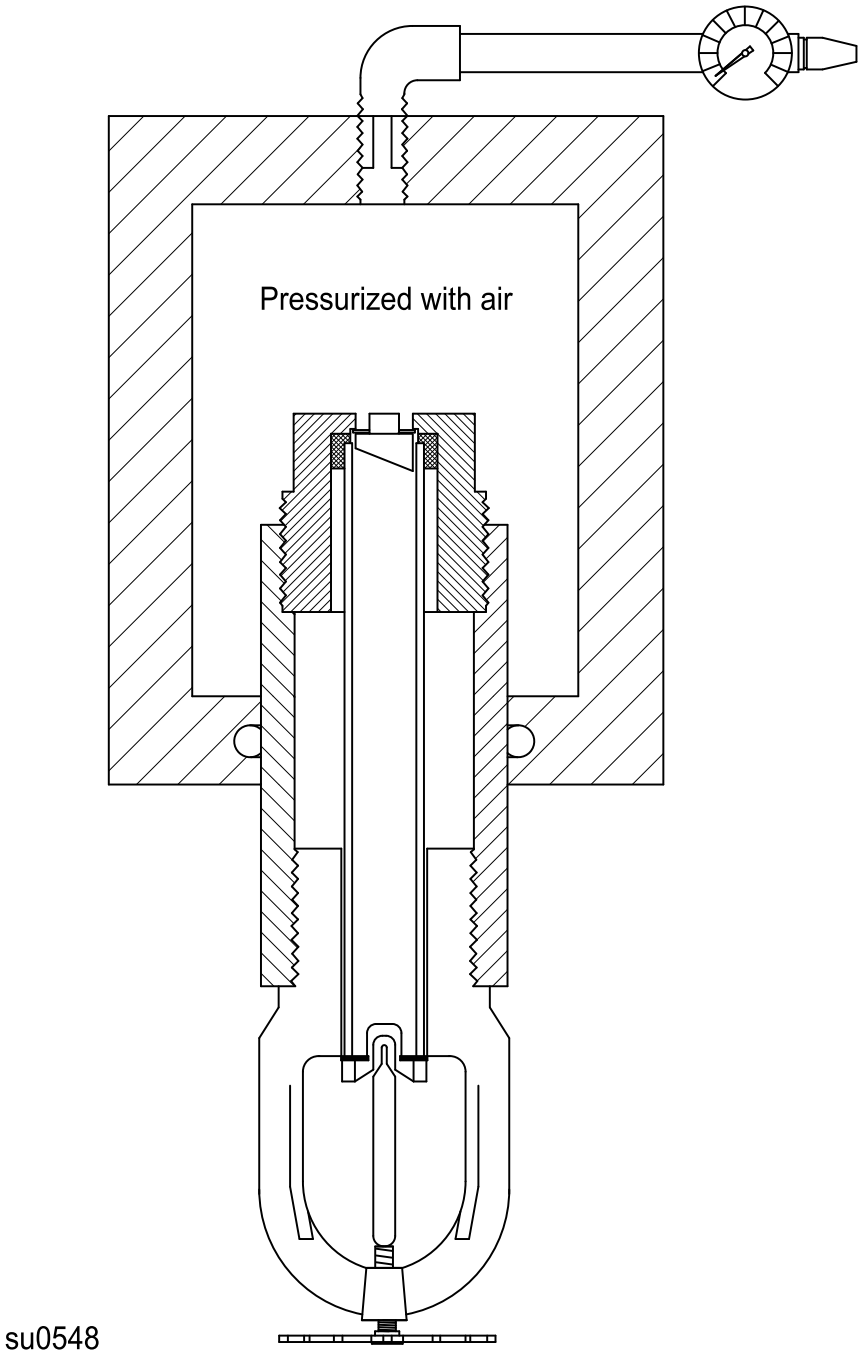

Documents
Document Sharing Hub
Full document details: UL 199 2022

27.3 The assembly is to be immersed in water and orientated so that air bubbles indicating leakage past the extension nipple and inlet seal assembly connection point are allowed to freely escape from internal waterway of the dry sprinkler assembly. The air pressure applied to the connection point is then to be increased from 0 to 15 psig (0 to 103 kPa) within 30 s and then held for 30 s. Observations shall be made for leakage as evidenced by any air bubbles escaping from the internal portion of the dry sprinkler assembly.

28 30-Day Leakage Test

28.1 When tested as described in 28.2 – 28.4, an automatic sprinkler shall:

a) Experience no leakage when subjected to the 30 day test pressure specified in Table 28.1 for 30 days;

b) Not leak when subjected to the leakage test pressure specified in Table 25.1 or less for 1 min following the 30 days; and

c) Show no distortion or other mechanical damage following the leakage testing, as determined by visual examination.

Table 28.1
Test Pressures for the 30-Day Leakage Test

Rated pressure		30-day test pressure	
psig	(MPa)	psig	(MPa)
175	(1.2)	300	(2.1)
250	(1.7)	450	(3.1)
300	(2.1)	500	(3.4)

28.2 Five samples are to be installed on a water-filled test line maintained under a constant test pressure as specified in Table 28.1 for 30 days. The samples are to be examined during and at the end of the test period for evidence of leakage of water at the closure cap.

28.3 Following completion of this 30-day test period, the samples are to be tested to verify that they do not leak at the leakage test pressure specified in Table 25.1 or at any lower pressure. The pressure is to be increased from 0 to the required test pressure a rate not exceeding 300 psig (2.07 MPa) per min. The pressure is to be maintained at the leakage test pressure specified in Table 25.1 for 1 min, and is then to be decreased to 0 psig at a rate not exceeding 300 psig (2.07 MPa) per min.

28.4 The samples then are to be visually examined to verify there is no evidence of distortion or other mechanical damage.

29 Water Hammer Test

29.1 When tested as described in 29.2 – 29.5, an automatic sprinkler shall:

a) Experience no leakage when subjected to 100,000 applications of pressure surges having a test pressure range as specified in Table 29.1;

b) Not leak when subjected to the leakage test pressure specified in Table 25.1 for 1 min, following the 100,000 cycles of water hammer; and

c) Show no distortion or other physical damage following the water hammer testing, as determined by visual examination.

AVA Documents
Document Sharing Hub
Full document details: UL 199 2022

Table 29.1
Test Pressure Ranges for the Water Hammer Test

Rated pressure		Test pressure range	
psig	(MPa)	psig	(MPa)
175	(1.2)	50 – 500	(0.34 – 3.4)
250	(1.7)	50 – 500	(0.34 – 3.4)
300	(2.1)	150 – 600	(1 – 4.1)

29.2 Five samples are to be installed on a water-filled test line connected to a pump system that produces a rapid rise in pressure in accordance with Table 29.1 at the rate of not more than 60 cycles per min. The test piping is to be filled so that there is water at the sprinkler seat, and the pump is to be placed in operation and adjusted to produce the specified test-pressure cycle.

29.3 During the pressure cycling, observations are to be made for evidence of leakage.

29.4 Following completion of the pressure cycling, the samples are to be tested to verify that they do not leak at the leakage test pressure specified in Table 25.1 or at any lower pressure. The pressure is to be increased from 0 to the required test pressure at a rate not exceeding 300 psig (2.07 MPa) per min. The pressure is to be maintained at the leakage test pressure specified in Table 25.1 for 1 min, and is then to be decreased to 0 psig at a rate not exceeding 300 psig (2.07 MPa) per min.

29.5 The samples then are to be visually examined to verify there is no evidence of distortion or other mechanical damage.

30 Vacuum Test

30.1 An automatic sprinkler shall not be damaged and shall comply with the Leakage Test, Section 25, following exposure to a vacuum as specified in 30.2.

30.2 Five samples are to be installed on a manifold and subjected to a vacuum of minus 8.84 psi (18 in of mercury) (minus 61 kPa) for 1 min. The samples are then to be removed from the manifold, visually examined for damage, and then subjected to the Leakage Test, Section 25.

OPERATION TESTS

31 Operating Temperature (Bath) Test

31.1 The operating temperature of automatic sprinklers and cover plates, when tested as described in 31.1 – 31.7, shall be within a temperature range as follows:

a) ±3.5 % of the marked temperature rating for sprinklers rated less than 400 °F (204 °C); and

b) 107 % of the marked temperature rating for sprinklers rated 400 °F (204 °C) and higher.

For the purpose of this determination for sprinklers rated 400 °F (204 °C) and higher, the marked temperature rating is to be the minimum value and included as one of the values within the range, making a total of eleven values in the range. Upon operation, all operating parts of the sprinkler shall clear the waterway as intended except as indicated in 31.2.

31.2 Sprinkler operation for this test includes the intended functioning of eutectic elements or any rupture of a glass bulb heat responsive element. If partial fracture of the glass bulb in the liquid environment occurs which does not result in sprinkler operation, the temperature at which bulb-fracture occurred shall

AVA Documents
Document Sharing Hub
Full document details: UL 199 2022

be considered the operating temperature, but additional sprinkler samples shall be subjected to the Air Bath for Glass Bulb Sprinkler Test, Section 32.

31.3 At least ten samples of each type of sprinkler produced of each temperature rating are to be subjected to this test. A sprinkler that does not require pressure to operate is to be tested at zero gauge pressure. A sprinkler that requires pressure to operate is to be tested while pressurized at 4-1/2 ±1/2 psig (31 ±3.4 kPa).

31.4 Water is to be used in bath tests of sprinklers that have operating temperature ratings of 175 °F (79 °C) or lower. Samples having operating temperature ratings of 176 – 575 °F (80 – 302 °C) are to be bath-tested in an oil having a flash point exceeding the test temperature.

31.5 The samples are to be placed in an upright position and completely immersed in the water or oil bath. The bath vessel is to be provided with a source for heating the liquid at the prescribed rate and with means to agitate the liquid and measure the temperature of the liquid bath.

31.6 A calibrated temperature measuring device is to be used to determine temperature of the liquids in bath tests. The sensing element of the temperature measuring device is to be held level with the sprinkler operating parts by a support member.

31.7 The temperature of the bath liquid is to be increased at a convenient rate until the liquid is within 20 °F (11 °C) of the temperature rating of the device [30 °F (16 °C) for 325 °F (163 °C) and higher temperature ratings]. The rate of temperature rise then is to be controlled at a constant rate of 1 ±0.2 °F (0.5 ±0.1 °C) per min until operation of the sprinkler or until a temperature 20 °F (11 °C) above the rated temperature is reached. The temperature of the liquid and the time of operation, as each sprinkler operates, are to be recorded.

32 Air Bath for Glass Bulb Sprinkler Test

32.1 When a partial fracture of a glass bulb occurs during the Operating Temperature (Bath) Test, Section 31, sprinklers with a glass bulb heat responsive element shall fully operate when subjected to the air bath test described in 32.2.

32.2 Fifty sample sprinklers with a glass bulb heat responsive element shall be placed on their inlet in a programmable circulating air oven. The temperature in the oven shall be gradually increased to 20 ±2 °F (11 ±1.1 °C) below the marked temperature rating of the sprinklers. When this temperature is reached, the oven shall be maintained at a constant temperature for a period of 60 ±5 min. The temperature shall then be increased at a constant rate of 1 ±0.5 °F (0.5 ±0.3 °C) per min until the temperature in the oven is 25 % higher than the marked temperature rating of the sprinklers or until all the sprinklers operate, whichever occurs first. Each sample shall be examined for full operation.

33 Sensitivity Tests

33.1 General

33.1.1 An automatic sprinkler shall comply with the requirements as referenced in Table 33.1 based upon the sprinkler type:

Documents
Document Sharing Hub
Full document details: UL 199 2022

Table 33.1
Sensitivity Requirements by Sprinkler Type

Sprinkler type	Requirements
Standard Response (all except flush, recessed and concealed; and extended coverage)	33.2.1
Standard Response Flush, Recessed and Concealed, and Standard Response Extended Coverage	33.2.1 and 33.3.1
Quick Response(all)	33.2.2 and 33.3.2
Residential	33.2.2 and 33.3.2
ESFR	33.2.3

33.1.2 A coating shall not remain on sprinkler parts in a manner that impairs operation or distribution at the time of sprinkler operation in 33.2 and 33.3.

33.2 Oven heat test

33.2.1 A standard response sprinkler shall operate within the time range specified in Table 33.2 for each sample sprinkler when tested in the Oven Heat Test as specified in 33.2.4 – 33.2.6. If the sprinkler temperature is not shown in Table 33.2, the minimum and maximum operating time range for each sample sprinkler shall be determined by using the formula specified in 33.2.7, based on a RTI value of 80 $(m \cdot s)^{1/2}$ [145 $(ft \cdot s)^{1/2}$] for the minimum value and on a RTI value of 350 $(m \cdot s)^{1/2}$ [630 $(ft \cdot s)^{1/2}$] for the maximum value, and the marked temperature rating of the sprinkler.

Exception: The minimum operating time for the Oven Heat Test does not apply to standard response extended coverage and ceiling sprinklers complying with 33.3.1.

33.2.2 QR, QR extended coverage and residential sprinklers shall have the following operating time characteristics when tested in the sensitivity test oven as specified in 33.2.4 – 33.2.6:

a) A maximum operating time specified in Table 33.2 for each sample sprinkler in the as-received condition. If the sprinkler temperature rating is not shown in Table 33.2, the maximum operating time for each sample sprinkler shall be determined by using the formula specified in 33.2.7 based on a Response Time Index (RTI) value of 50 $(m \cdot s)^{1/2}$ [90 $(ft \cdot s)^{1/2}$], and the marked temperature rating of the sprinkler.

b) Mean operating time after being subjected to the exposure tests specified in Sections 36, 44, and 45 shall be equal to or less than a 1.30 multiple of the mean operating time of the sprinkler tested in the as-received condition.

Documents
Document Sharing Hub
Full document details: UL 199 2022

Table 33.2
Operating Time in Oven Heat Test for Quick Response, Residential and Standard Response Sprinklers

Sprinkler temperature rating		Oven temperature		Quick response and residential[b] type, s	Standard response type, s		Coated standard response type, s[a]
°F	(°C)	°F	(°C)	Max.	Min.	Max.	Max.
135	(57.2)	275	(135)	11.2	17.8	78.3	180
140	(60.0)	275	(135)	12.3	19.7	86.3	180
155	(68.3)	275	(135)	16.0	25.6	112.2	180
160	(71.1)	275	(135)	17.3	27.7	121.5	180
165	(73.9)	275	(135)	18.7	30.0	131.3	180
175	(79.4)	386	(197)	12.1	19.4	85.2	180
200	(93.3)	386	(197)	16.1	25.7	112.9	180
212	(100.0)	386	(197)	18.2	29.0	127.5	180
220	(104.4)	386	(197)	19.7	31.8	137.9	180
250	(121.1)	555	(291)	14.2	22.7	99.6	180
286	(141.1)	555	(291)	18.1	29.0	127.2	180
300	(148.9)	555	(291)	19.8	31.7	138.9	180
360	(182.2)	765	(407)	16.7	26.8	117.0	180
400	(204.4)	765	(407)	20.0	32.0	139.8	180
450	(232.2)	765	(407)	24.6	39.4	172.2	180
500	(260.0)	765	(407)	30.0	48.1	210.2	210.3

[a] Corrosion resistant sprinklers with coated heat responsive elements including wax, lead, Teflon, wax over lead, and polyester coating. Coated quick response sprinklers shall comply with 33.2.2.

[b] Residential sprinklers shall have a temperature rating within the ordinary and intermediate classifications.

33.2.3 An ESFR sprinkler shall have the following sensitivity characteristics when tested in the sensitivity test oven as specified in 33.2.4 – 33.2.8.

a) An RTI not exceeding 36 $(m \cdot s)^{1/2}$ [65 $(ft \cdot s)^{1/2}$] in the as-received condition, and

b) Mean operating time after being subjected to the exposure tests specified in Sections 36, 44, and 45 shall be equal to or less than a 1.30 multiple of the mean operating time of the sprinklers tested in the as-received condition when tested in the most favorable orientation.

Exception: An ESFR sprinkler shall be permitted to have an RTI greater than 36 $(m \cdot s)^{1/2}$ [65 $(ft \cdot s)^{1/2}$] but not exceeding 50 $(m \cdot s)^{1/2}$ [90 $(ft \cdot s)^{1/2}$] when fire suppression can be demonstrated during large scale fire tests representing the installation conditions, protected storage configurations, and protected commodity specified for the sprinkler utilizing a higher RTI heat responsive element. See Section 55 for examples of large scale fire tests

Documents
Document Sharing Hub
Full document details: UL 199 2022

Table 33.3
Sensitivity Oven Temperatures

Sprinkler temperature rating		Oven temperature	
°F	(°C)	°F ±2 °F	(°C ±1 °C)
135 – 170	(57 – 77)	275	(135)
175 – 225	(79 – 107)	386	(197)
250 – 300	(121 – 149)	555	(290)
325 – 575	(163 – 191)	765	(407)

33.2.4 Sprinklers of each style are to be tested in the sensitivity test oven in the pendent position with the heat responsive element located at least 1 in (25.4 mm) away from the inside surfaces of the oven as follows:

a) For sprinkler designs without frame arms and incorporating symmetrical heat responsive elements and symmetrical sprinkler bodies, ten samples are to be orientated in the pendent position.

b) For sprinkler designs (other than ESFR) with or without frame arms and incorporating unsymmetrical heat responsive elements or unsymmetrical body designs, ten samples are to be orientated in the pendent position with the heat responsive element upstream of the axis of the sprinkler body.

c) For sprinkler designs incorporating frame arms with symmetrical heat responsive elements (other than ESFR), ten samples are to be orientated in the pendent position with the frame arms in a plane perpendicular to the direction of air flow.

d) For ceiling sprinkler designs incorporating removable cups, escutcheons, and removable closure assemblies, ten samples are to be orientated in the pendent position with the closure assemblies removed.

e) For flush sprinklers with an air gap between the heat responsive element and the sprinkler body, ten samples shall be orientated in the pendent position.

f) For ceiling sprinkler designs incorporating an integral closure assembly and flush style sprinklers without an air gap between the heat responsive element and sprinkler body, ten samples are to be orientated with the heat responsive element exposed to the air flow. Recessed or concealed style sprinkler designs where the heat responsive elements are not exposed, and that incorporate integral escutcheons or closures that are not practically removable, are not to be subjected to the Oven Heat Test.

g) For ESFR sprinklers, twenty samples are to be tested. Five samples are to be tested in each of the following orientations:

1) In the pendent position with the frame arms in a plane perpendicular to the direction of the air flow and the heat responsive element upstream of the axis of the sprinkler body. This orientation is generally most favorable with respect to response time.

2) In the pendent position with the sprinkler rotated 90° from the first orientation.

3) In the pendent position with the sprinkler rotated 135° from the first orientation.

4) In the pendent position with the sprinkler rotated 180° from the first orientation.

33.2.5 At least ten samples are to be conditioned at 75 ±2 °F (24 ±1 °C) for at least 2 h. The ambient temperature of the room with the plunge oven shall be 75 ±9 °F (24 ±5 °C). The inlet end of each sprinkler

AVA Documents
Document Sharing Hub
Full document details: UL 199 2022

sample is to be connected to a source of air pressure at 4 ±1 psig (28 ±7 kPa) and quickly plunged into the sensitivity test oven in a pendent position. The operating time is to be measured using a timer capable of measuring 0.01 s and accurate to within 0.01 ±0.01 s.

33.2.6 The sensitivity test oven is to consist of a square or rectangular stainless steel chamber. A typical chamber is illustrated in Figure 33.1. A constant air velocity of 8.33 ±0.05 ft/s (2.54 ±0.01 m/s) and an air temperature as specified in Table 33.2 for each temperature rating and style sprinkler are to be established. Air velocity is to be measured using an orifice plate and a manometer or a bidirectional probe and a velometer. The air temperature is to be measured by use of a 30 AWG (0.05 mm^2) thermocouple centered upstream from the sprinkler as shown in Figure 33.1.

Documents
Document Sharing Hub
Full document details: UL 199 2022

Figure 33.1

Typical Sensitivity Test Oven Configuration

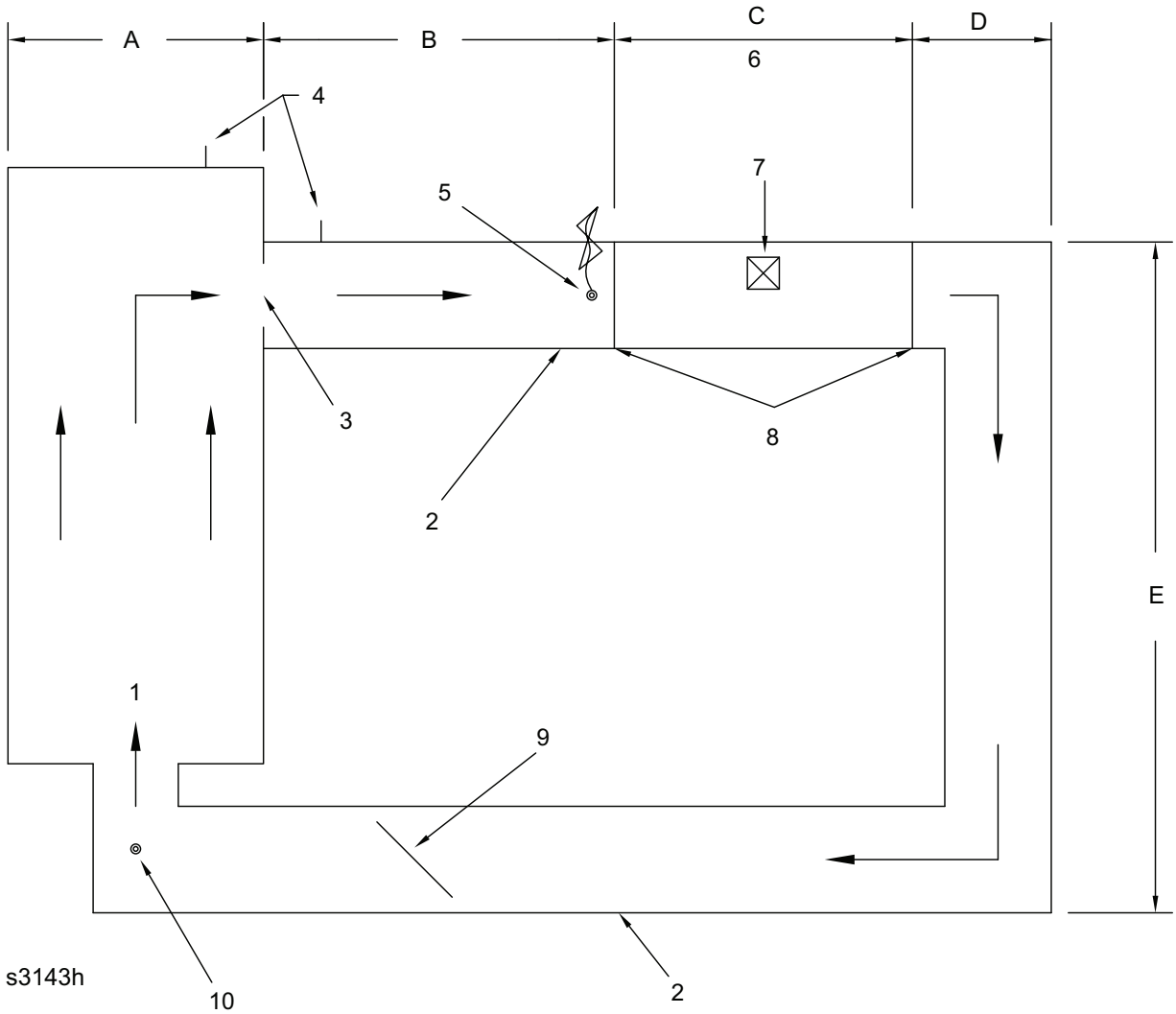

Key

1 – Heating Plenum
2 – 8 in x 8 in (203 mm x 203 mm) Square Duct
3 – Orifice
4 – Air Velocity Pressure Taps
5 – 30 AWG Thermocouple
6 – Test Section
7 – Sprinkler
8 – Fine Mesh Screens
9 – Air Velocity Damper
10 – Blower

A – 14 in (356 mm)
B – 50 in (1.27 mm)
C – 16 in (406 mm)
D – 12 in (295 mm)
E – 54 in (1.37 mm)

Documents
Document Sharing Hub
Full document details: UL 199 2022

33.2.7 The required sprinkler operating time values specified in 33.2.1 and 33.2.2 shall be calculated by using the following equation:

$$t_o = \frac{-RTI * In\left[1 - \left[\frac{(T_m - T_u)}{T_g - T_u}\right]\right]}{\sqrt{u}}$$

Where:

RTI: Response Time Index [$(ft \cdot s)^{1/2}$; $(m \cdot s)^{1/2}$]

t_o: Operating time of the sprinkler [s]

u: Nominal gas velocity in the test section of the oven [8.33 ft/s; 2.54 m/s]

T_m: Marked temperature rating of the sprinkler [°F; °C]

T_g : Nominal gas temperature in test section in Table 33.2 [°F; °C]

T_u : Nominal sprinkler conditioning temperature [75 °F; 24 °C]

33.2.8 For ESFR sprinklers, the RTI for each sample is to be computed as follows:

$$RTI = Tu^{1/2}$$

in which:

$$T = -t_o / In\left[1 - \left(\frac{T_m}{T_g}\right)\right]$$

and:

t_o: Operating time of the sprinkler [s] T_m: Marked temperature rating of the sprinkler, [°F; °C]

T_g: Nominal gas temperature in the test section of the oven minus the nominal sprinkler conditioning temperature, [°F; °C]; and

U: Nominal gas velocity in the test section of the oven [8.33 ft/s; 2.54 m/s]

33.3 Room heat tests

33.3.1 When tested in accordance with 33.3.3 and 33.3.4 standard response flush, recessed and concealed standard coverage sprinklers, and standard response extended coverage sprinklers shall operate such that the mean response time and unbiased standard deviation provide computed statistical tolerance limits (see Annex A) with 95 % confidence that 99 % of the sprinklers tested do not exceed the applicable time limit described in Table 33.4.

33.3.2 When tested in accordance with 33.3.3 and 33.3.5, QR standard coverage, QR extended coverage and residential sprinklers shall operate within the applicable time limit described in Table 33.4.

Documents
Document Sharing Hub
Full document details: UL 199 2022

Table 33.4
Room Heat Sensitivity Requirements by Sprinkler Response

Sprinkler type	Sprinkler temperature rating of 170 °F (77 °C) or less	Sprinkler temperature rating of 175 °F (79 °C) to 225 °F (107 °C)
Standard Response	231 sec	189 sec
Standard Response ECLH	231 sec	189 sec
Standard Response ECOH	150 sec	120 sec
QR and Residential	75 sec	75 sec
QR ECLH	75 sec	75 sec
QR ECOH	55 sec	55 sec
ESFR	Test Not Applicable	Test Not Applicable

33.3.3 Sprinklers of each type are to be installed in a test room in the following position and orientation:

a) For pendent and ceiling sprinkler designs without frame arms and incorporating symmetrical heat responsive elements and symmetrical sprinkler bodies, 10 samples are to be installed in their intended position at the ceiling.

b) For pendent and ceiling sprinkler designs with or without frame arms and incorporating unsymmetrical heat responsive elements, 10 samples are to be orientated with the heat responsive element downstream of the axis of the sprinkler body in relation to the direction of the fire source. The samples are to be in their intended position at the ceiling.

c) For pendent and ceiling sprinkler designs incorporating frame arms with symmetrical heat responsive elements, 10 samples are to be orientated with the frame arms in a plane parallel to the direction of the fire source. The samples are to be installed in their intended position at the ceiling.

d) For pendent and sidewall sprinklers intended to be installed as a recessed sprinkler, 10 samples shall be tested in the recessed position in the ceiling or wall, as applicable, in lieu of the non-recessed position.

e) For flush, recessed and concealed sprinklers having a vented escutcheon, 10 samples are to be installed in the most recessed position in a manner that does not inhibit air flow through the escutcheon.

f) For extended coverage upright sprinklers and pendent sprinklers not intended to be installed as a recessed sprinkler, 10 samples shall be tested with the deflector 10 in (25.4 cm) below the ceiling.

g) For residential pendent sprinklers also intended to be installed as a recessed sprinkler, 10 samples shall be tested in the most recessed position in lieu of the maximum distance below the ceiling when the intended installation distance below the ceiling is 4 in (102 mm) or less.

h) For sidewall sprinklers, 10 samples are to be installed in their intended position with the deflector located 4 in (102 mm) below the ceiling and the maximum distance below the ceiling if intended for distances greater than 6 in (152 mm).

33.3.4 Sprinkler samples used for tests with a starting ambient temperature of 87 ±2 °F (31 ±1 °C) shall be conditioned at 87 ±2 °F (31 ±1 °C) for 2 h prior to being installed. Sprinkler samples having a starting ambient temperature of 120 ±3 °F (49 ±2 °C) shall be conditioned at 120 ±3 °F (49 ±2 °C) for 2 h prior to being installed.

33.3.5 At least ten samples shall be tested in groups of five in a nominal 8 ft (2,4 m) high closed room and subjected to the heat from a 12 in (305 mm) by 12 in (305 mm) by 12 in (305 mm) sand burner (see Figure 33.2) located on the floor in one corner of the room. The sprinklers shall be located 6 in (15 cm)

AVA Documents
Document Sharing Hub
Full document details: UL 199 2022

apart as described in Figure 33.3, Figure 33.4, Figure 33.5 or Figure 33.6 for the applicable type of sprinkler referenced in each figure and in Table 33.1 and Table 33.4. The test parameters for each type of sprinkler shall be as specified in Table 33.5. Each sprinkler shall be filled with water at (20 ±5) °C either with no pressure or with the inlet connected to a source of pressure at 0,05 MPa (0,5 bar). During or after the installation of a sprinkler in the room, the sprinklers shall not be exposed to a temperature greater than 15 °F(8 °C) above the starting ambient test temperature.

Table 33.5
Room Heat Sensitivity Test Parameters

Sprinkler type	Test room configuration	Gas flow for sprinkler temperature rating of 170 °F (77 °C) or less, ft^3/h (m^3/h)	Gas flow for sprinkler temperature rating of 175 °F (79 °C) to 225 °F (107 °C), ft^3/h (m^3/h)	Starting ambient temperature for sprinkler temperature rating of 170 °F (77 °C) or less, °F (°C)	Starting ambient temperature for sprinkler temperature rating of 175 °F (79 °C) to 225 °F (107 °C), °F (°C)
Standard-Response	Figure 33.3	340 (9.6)	915 (25.9)	87 ±2 (31 ±1)	120 ±3 (49 ±2)
Standard-Response Extended Coverage	Figure 33.4	340 (9.6)	915 (25.9)	87 ±2 (31 ±1)	120 ±3 (49 ±2)
Quick Response	Figure 33.5	500 (14.2)	600 (17.0)	87 ±2 (31 ±1)	120 ±3 (49 ±2)
Residential	Figure 33.5	500 (14.2)	500 (14.2)	87 ±2 (31 ±1)	87 ±2 (31 ±1)
Quick Response Extended Coverage	Figure 33.6	500 (14.2)	600 (17.0)	87 ±2 (31 ±1)	120 ±3 (49 ±2)

Documents
Document Sharing Hub
Full document details: UL 199 2022

Figure 33.2

Example of Sand Burner Apparatus

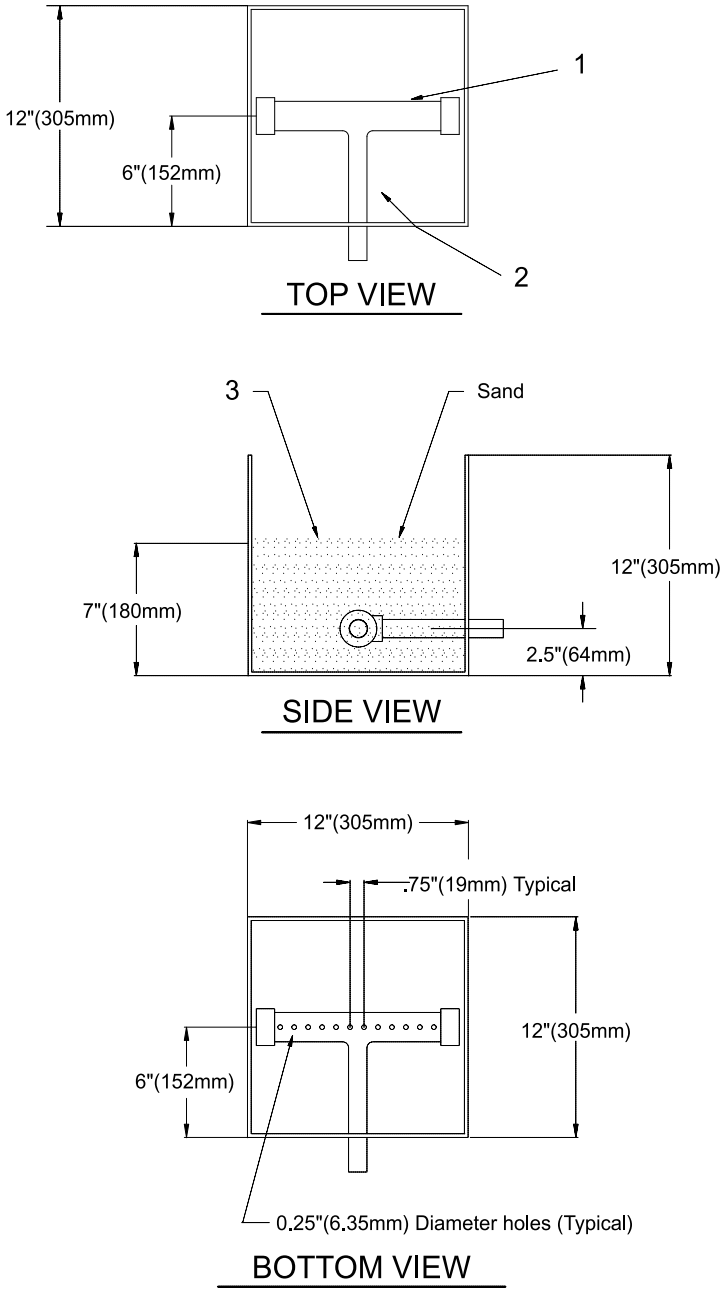

Materials:
- Steel Plate Box, Welded.
- Steel or Stainless Steel Piping and Fittings.
- Mason Grade Sand.

Key:
1 Nominal 1 Inch Piping.
2 Nominal 1-1/4 or 1-1/2 Inch Pipe
3 Sand Depth

S5529

Documents
Document Sharing Hub
Full document details: UL 199 2022

Figure 33.3

Plan View of Room Heat Test for Standard Response Flush, Recessed and Concealed Sprinklers having a Standard Coverage Area

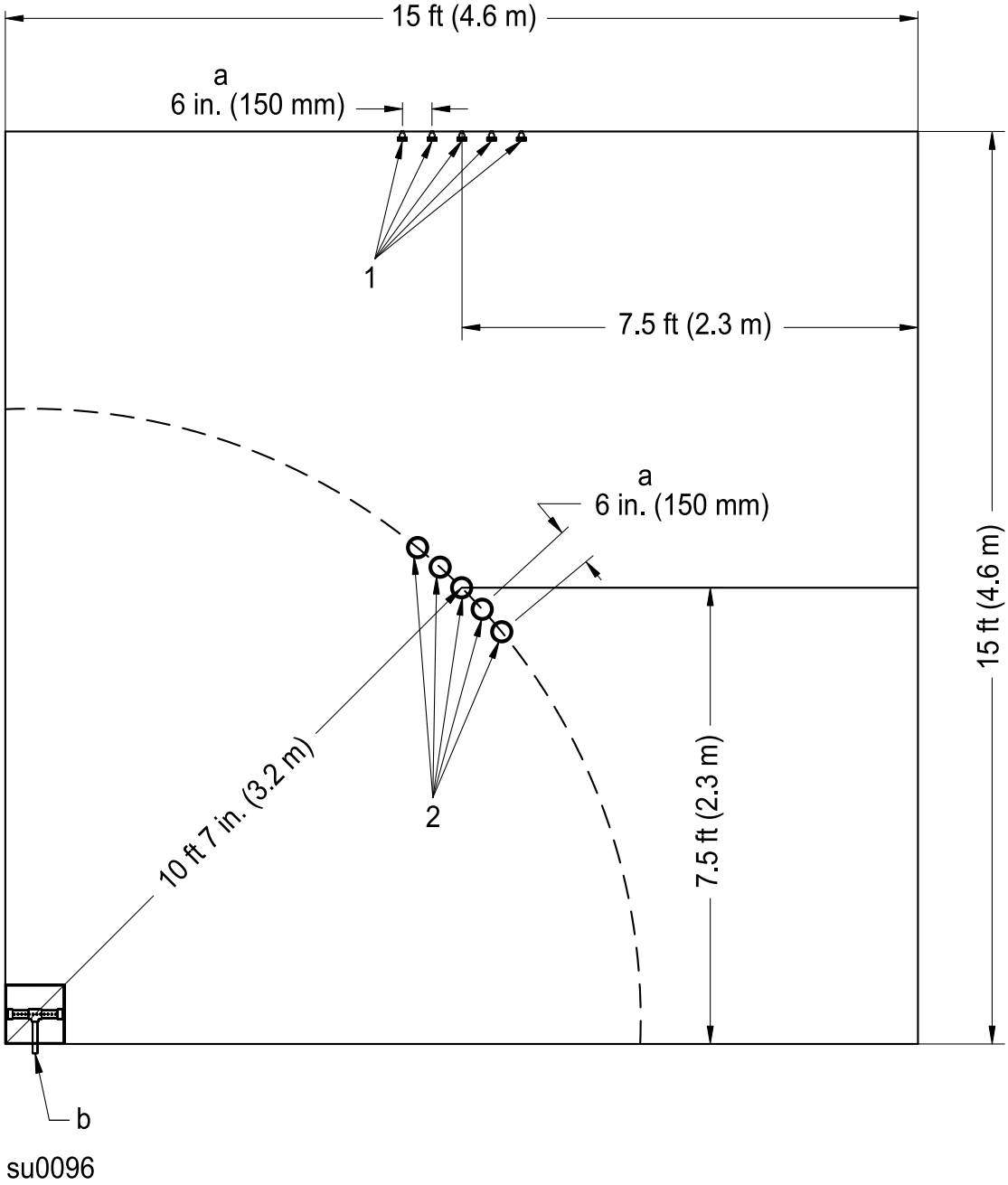

Key

1 – sidewall sprinkler locations

2 – pendent sprinkler locations

a – typical dimension

b – sand burner

Documents
Document Sharing Hub
Full document details: UL 199 2022

Figure 33.4

Plan View of Room Heat Test for Standard Response Extended Coverage Sprinklers

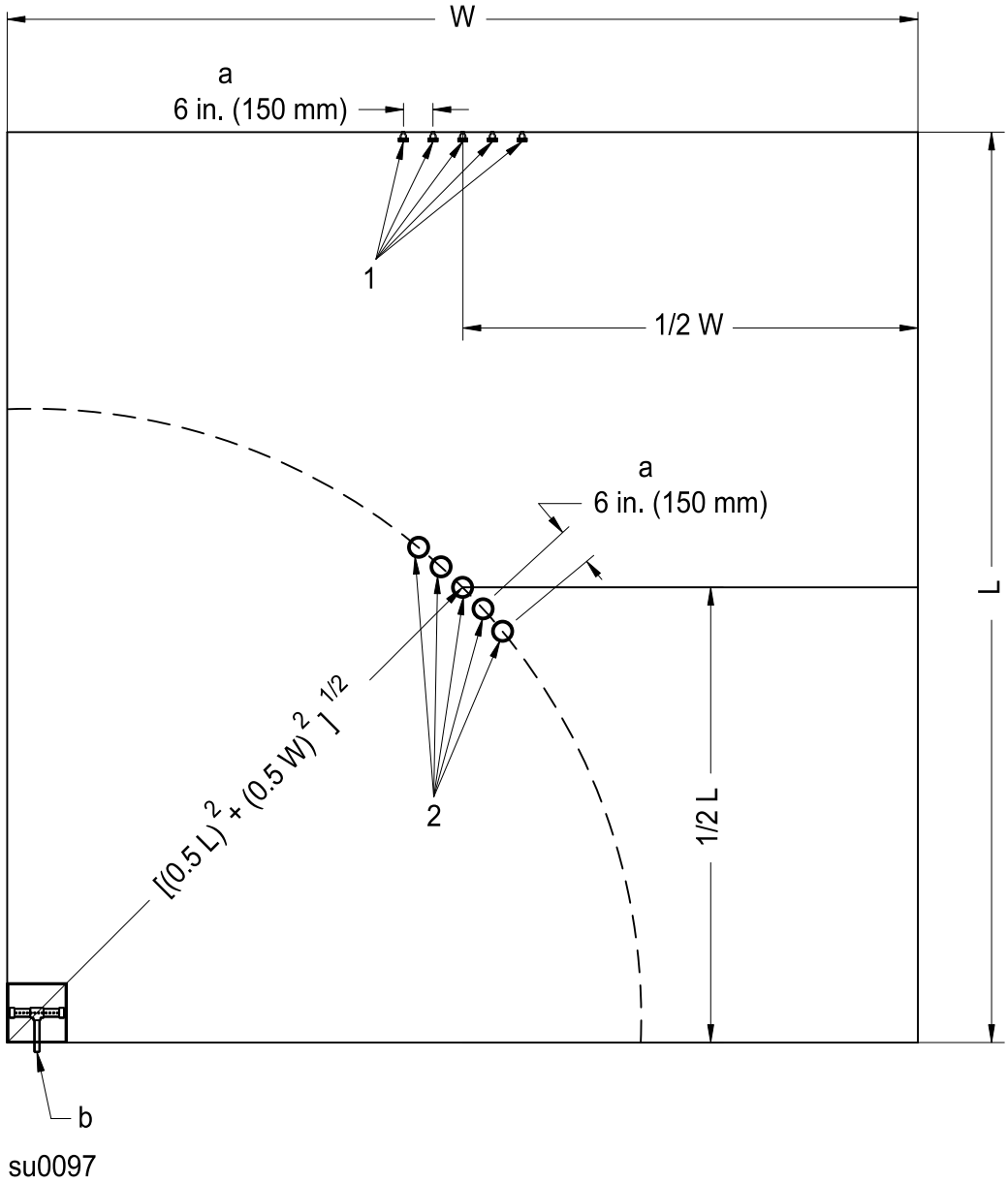

Key

1 – sidewall sprinkler locations

2 – pendent sprinkler locations

L – coverage length

W – coverage width

a – typical dimension

b – sand burner

Documents
Document Sharing Hub
Full document details: UL 199 2022

Figure 33.5

Plan View of Room Heat Test for QR and Residential Sprinklers

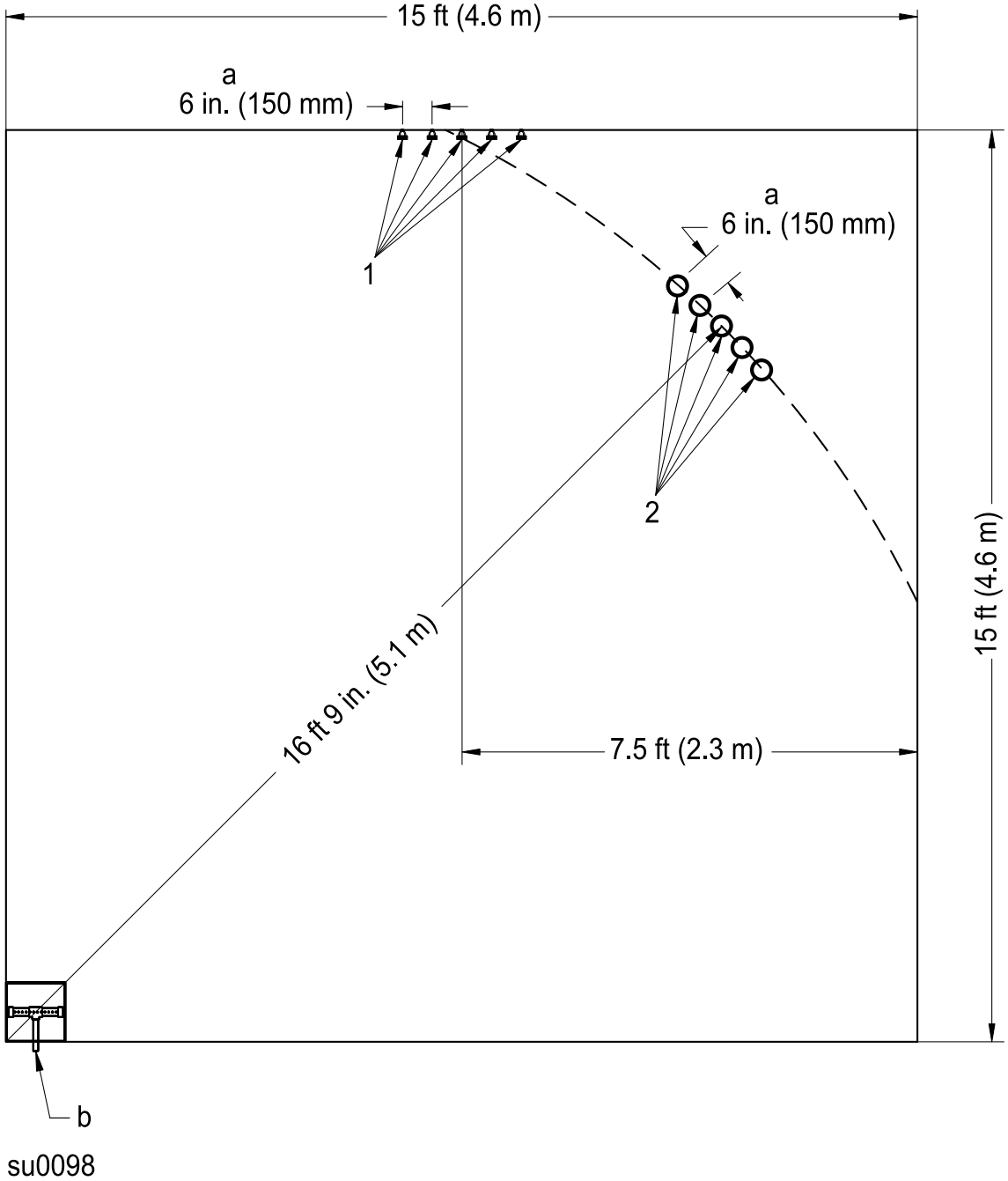

Key

1 – sidewall sprinkler locations

2 – pendent sprinkler locations

a – typical dimension

b – sand burner

Documents
Document Sharing Hub
Full document details: UL 199 2022

Figure 33.6

Plan View of Room Heat Test for QR Extended Coverage Sprinklers

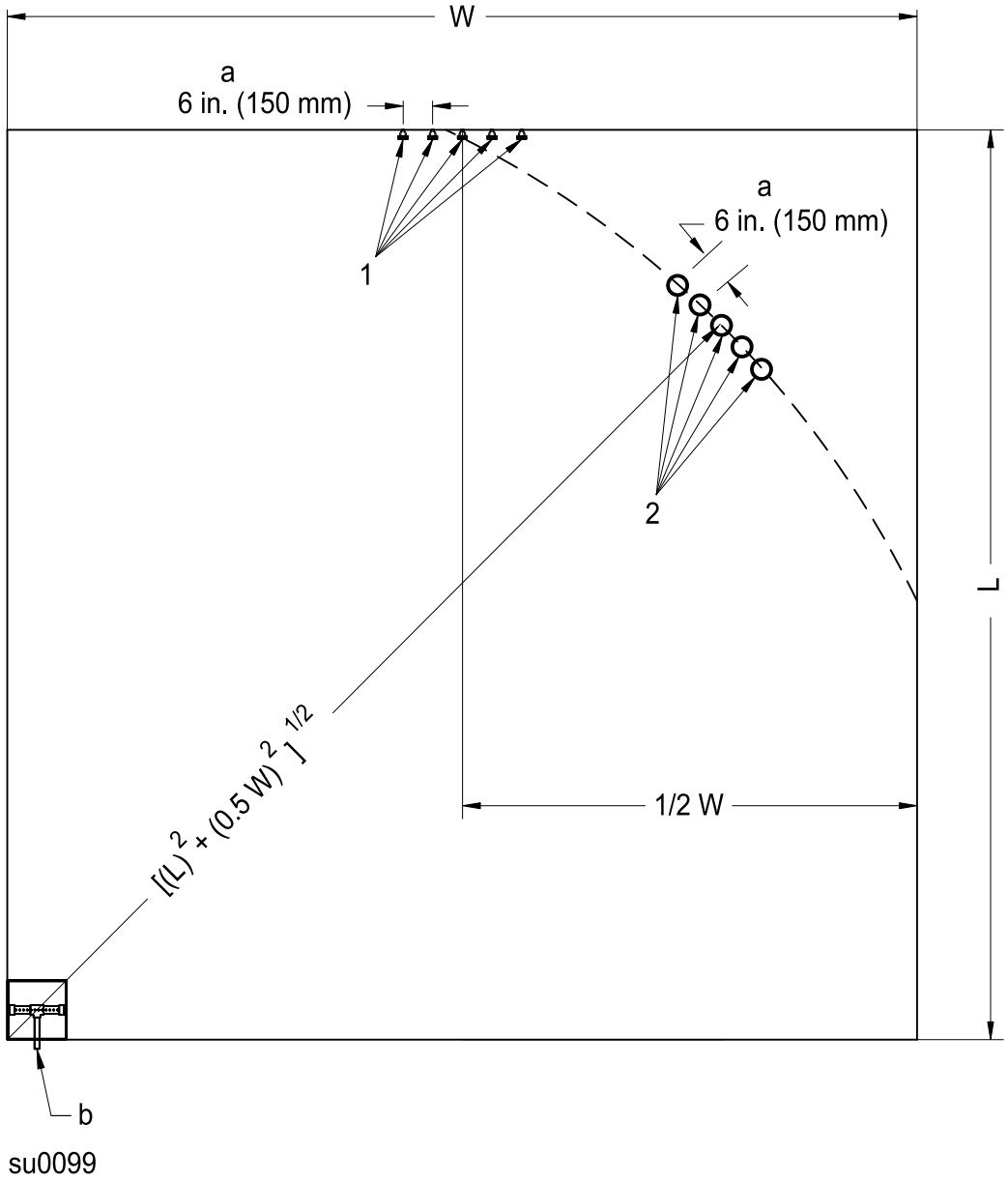

Key

1 – sidewall sprinkler locations

2 – pendent sprinkler locations

L – coverage length

W – coverage width

a – typical dimension

b – sand burner

Documents
Document Sharing Hub
Full document details: UL 199 2022

34 Operation – Lodgement Test

34.1 An automatic sprinkler shall operate at service pressures of 7 psig (48 kPa) to the rated pressure. Upright dry-type sprinklers shall be permitted to operate at a minimum pressure in accordance with 34.3.

34.2 All operating parts shall release with sharp, positive action. Operating parts intended to be released from the sprinkler assembly shall clear the sprinkler frame and deflector to not impair the water distribution pattern and internal parts of dry sprinklers shall operate to not restrict water flow below its intended rate.

34.3 An upright dry-type sprinkler of the maximum length shall operate and clear the operating parts at a pressure of 12.5 psig (86 kPa) or less. When the minimum pressure required to clear operating parts exceeds 5 psig (34 kPa), the minimum operating pressure of the sprinkler as referenced in the Manufacturer's Installation Instructions, Section 60, shall be designated as two times the minimum pressure required to clear the operating parts.

34.4 Automatic sprinklers or dry-type automatic sprinklers in the shortest length are to be individually tested except as specified in 34.3. Each sample is to be installed in its intended installation position on a rigid piping arrangement and supplied with flowing water. Tests are to be conducted using a single-feed and a double-feed water supply arrangement as described in Figure 34.1. The test pressures and number of samples tested at each pressure using each water supply configuration is to be as specified in Table 34.1. Each sample is to be operated by exposing the heat responsive element to a uniform application of heat. A sprinkler does not comply when a part interfering with correct water distribution or water flow maintains interference for more than 10 s under the water flow service pressure. The service pressure and the action of the operating parts, when releasing, are to be observed to determine compliance with these requirements.

Documents
Document Sharing Hub
Full document details: UL 199 2022