# UL 2021

## STANDARD FOR SAFETY

Fixed and Location-Dedicated Electric Room Heaters

Documents
Document Sharing Hub

Full document details: UL 2021 2021

Documents
Document Sharing Hub

Full document details: UL 2021 2021

UL Standard for Safety for Fixed and Location-Dedicated Electric Room Heaters, UL 2021

Fourth Edition, Dated September 30, 2015

***Summary of Topics***

***This revision of ANSI/UL 2021 dated February 2, 2021 includes replacing the reference to the Standard for Power Conversion Equipment, UL 508C, with reference to the Standard for Adjustable Speed Electrical Power Drive Systems – Part 5-1: Safety Requirements – Electrical, Thermal and Energy, UL 61800-5-1; 3.3.4.1 and 21.4***

Text that has been changed in any manner or impacted by UL's electronic publishing system is marked with a vertical line in the margin.

The revised requirements are substantially in accordance with Proposal (s) on this subject dated November 6, 2020.

All rights reserved. No part of this publication may be reproduced, stored in a retrieval system, or transmitted in any form by any means, electronic, mechanical photocopying, recording, or otherwise without prior permission of UL.

UL provides this Standard "as is" without warranty of any kind, either expressed or implied, including but not limited to, the implied warranties of merchantability or fitness for any purpose.

In no event will UL be liable for any special, incidental, consequential, indirect or similar damages, including loss of profits, lost savings, loss of data, or any other damages arising out of the use of or the inability to use this Standard, even if UL or an authorized UL representative has been advised of the possibility of such damage. In no event shall UL's liability for any damage ever exceed the price paid for this Standard, regardless of the form of the claim.

Users of the electronic versions of UL's Standards for Safety agree to defend, indemnify, and hold UL harmless from and against any loss, expense, liability, damage, claim, or judgment (including reasonable attorney's fees) resulting from any error or deviation introduced while purchaser is storing an electronic Standard on the purchaser's computer system.

Documents
Document Sharing Hub

Full document details: UL 2021 2021

No Text on This Page

Documents
Document Sharing Hub

Full document details: UL 2021 2021

**SEPTEMBER 30, 2015**
(Title Page Reprinted: February 2, 2021)

**ANSI/UL 2021-2021**

1

# UL 2021

## Standard for Fixed and Location-Dedicated Electric Room Heaters

First Edition – January, 1992
Second Edition – April, 1997
Third Edition – January, 2013

**Fourth Edition**

**September 30, 2015**

This ANSI/UL Standard for Safety consists of the Fourth Edition including revisions through February 2, 2021.

The most recent designation of ANSI/UL 2021 as an American National Standard (ANSI) occurred on February 2, 2021 ANSI approval for a standard does not include the Cover Page, Transmittal Pages, and Title Page.

Comments or proposals for revisions on any part of the Standard may be submitted to UL at any time. Proposals should be submitted via a Proposal Request in UL's On-Line Collaborative Standards Development System (CSDS) at https://csds.ul.com.

UL's Standards for Safety are copyrighted by UL. Neither a printed nor electronic copy of a Standard should be altered in any way. All of UL's Standards and all copyrights, ownerships, and rights regarding those Standards shall remain the sole and exclusive property of UL.

**COPYRIGHT © 2021 UNDERWRITERS LABORATORIES INC.**

Documents
Document Sharing Hub

Full document details: UL 2021 2021

No Text on This Page

Documents
Document Sharing Hub

Full document details: UL 2021 2021

## CONTENTS

## INTRODUCTION

1 Scope ....7
2 Glossary ....7
3 Components ....9
3.1 General ....9
3.2 Attachment plugs, receptacles, connectors, and terminals ....10
3.3 Controls ....11
3.4 Cords, cables, and internal wiring ....13
3.5 Film-coated wire (magnet wire) ....13
3.6 Insulation systems ....13
3.7 Printed wiring boards ....13
3.8 Semiconductors and small electronic components ....14
3.9 Supplemental insulation, insulating bushings, and assembly aids ....14
3.10 Switches ....15
3.11 Transformers ....16
4 Units of Measurement ....16
5 References ....16
6 General ....16

## CONSTRUCTION

7 Enclosure ....16
8 Parts Subject to Pressure ....26
9 Polymeric Materials ....27
10 Assembly ....27
11 Protection Against Corrosion ....28
12 Adjustment Stop ....29
13 Supply Connections ....29
13.1 Permanently connected appliances ....29
13.2 Cord-connected heaters ....32
13.3 Strain relief ....38
13.4 Pin terminals ....38
13.5 Bushings ....39
13.6 Pilot lights ....40
14 Current-Carrying Parts ....41
15 Internal Wiring ....41
15.1 General ....41
15.2 Protection of wiring ....41
15.3 Splices ....42
15.4 Separation of circuits ....43
15.5 Barriers ....44
16 Heating Elements ....44
17 Electrical Insulation ....45
18 Thermal Insulation ....45
19 Motors ....45
19.1 General ....45
19.2 Insulation systems ....46
20 Overcurrent Protection, General ....46
21 Overcurrent Protection, Motors and Motor Circuits ....48
22 Overcurrent Protection, High-Voltage Control Circuit Conductors ....49
22.1 Direct-connected high-voltage control circuit ....49
22.2 Tapped high-voltage control circuits ....49

AVA Documents
Document Sharing Hub
Full document details: UL 2021 2021

23 Overcurrent Protection, Transformers ..... 51
23.1 High-voltage transformers ..... 51
23.2 Low-voltage transformers ..... 52
24 Temperature Limiting Means ..... 52
25 Alarms ..... 54
26 Receptacles and Transfer Switches ..... 54
27 Lampholders ..... 55
28 Switches ..... 55
29 Automatic Controls and Control Circuits ..... 57
29.1 General ..... 57
29.2 Terminals and actuating members of safety devices ..... 58
30 Spacings ..... 59
31 Grounding ..... 60
32 Guarding of Heating Elements ..... 62
32.1 General ..... 62
32.2 Panel-type heaters ..... 63
32.3 Floor heaters ..... 63

**PERFORMANCE**

33 General ..... 64
34 Power Input Test ..... 64
35 Leakage Current Test ..... 64
36 Normal Temperature Tests ..... 67
37 Conditions for Operation Tests ..... 71
38 Continuous Operation Test ..... 72
39 Terry Cloth Test Fabric ..... 73
40 Alarm Device Endurance Test ..... 74
41 Abnormal Operation Test ..... 74
41.1 General ..... 74
41.2 Abnormal motor temperature test ..... 74
41.3 Stalled fan ..... 75
41.4 Overvoltage test ..... 76
41.5 Tip over ..... 76
41.6 Vertical wall ..... 76
41.7 Terry cloth drape ..... 77
41.8 Litter ..... 78
41.9 Motor overload and stalled motor ..... 78
41.10 Wall-mounted heaters ..... 80
41.11 Floor insert heaters ..... 81
41.12 Ceiling-panel heaters ..... 82
41.13 Abnormal ambient test ..... 82
42 Endurance Test ..... 83
43 Short-Circuit Tests ..... 84
44 Overload Test – High-Voltage Transformers ..... 85
45 Burnout Test – High-Voltage Transformers ..... 86
46 Dielectric Voltage-Withstand Test ..... 86
47 Insulation Resistance Test ..... 86
48 Rain Test ..... 87
49 Static Load Test ..... 90
50 Stability of Cord-Connected, Floor-Supported Heaters ..... 90
51 Element Support Impact Tests ..... 90
52 Test for Permanence of Cord Tag ..... 91
52.1 General ..... 91
52.2 Test conditions ..... 91
52.3 Test method ..... 92

Documents
Document Sharing Hub
Full document details: UL 2021 2021

53 Protection Against Personal Injury Test ..... 92
54 Strength of Adjustment Stop Test ..... 93

**MANUFACTURING AND PRODUCTION TESTS**

55 Production-Line Dielectric Voltage-Withstand ..... 94
56 Production-Line Grounding Continuity ..... 95
57 Production-Line Tip Over ..... 96

**RATINGS**

58 Details ..... 96

**MARKINGS**

59 Details ..... 96
60 Instructions for Use and Care ..... 103
60.1 General ..... 103
60.2 Installation ..... 104
60.3 Important instructions ..... 104
60.4 Operation ..... 105
60.5 Maintenance ..... 105
60.6 Grounding instructions ..... 106
60.7 Heater carton information ..... 107

**SUPPLEMENT SA – FIXED AND LOCATION DEDICATED ELECTRIC ROOM HEATERS FOR USE UNDER USCG ELECTRICAL ENGINEERING REGULATIONS SUBCHAPTER J, (46 CFR, PARTS 110 – 113)**

**ELECTRIC ROOM HEATERS FOR MARINE USE**

SA1 Scope ..... 109
SA2 Enclosure ..... 109
SA3 Heating Elements ..... 109
SA4 Automatic Controls ..... 109
SA5 Mounting Means ..... 109
SA6 Performance ..... 109

**SUPPLEMENT SB – CEILING INSERT AIR HEATERS WITH LAMPS**

**INTRODUCTION**

SB1 Scope ..... 111

**CONSTRUCTION**

SB2 Temperature Limiting Means ..... 111

**PERFORMANCE**

SB3 Normal Temperature Test ..... 111
SB3.1 General ..... 111
SB3.2 Test box ..... 112
SB3.3 Insulation ..... 112

AVA Documents
Document Sharing Hub
Full document details: UL 2021 2021

SB3.4 Test procedure ..... 112
SB4 Abnormal Operation Tests ..... 113
SB4.1 Inherently protected – overlamping ..... 113
SB4.2 Thermally protected – overlamping ..... 113
SB4.3 Thermally protected – defeated fan motor ..... 114
SB4.4 Locked rotor ..... 115
SB5 Marking ..... 115
SB6 Operating and Installation Instructions ..... 116

Documents
Document Sharing Hub
Full document details: UL 2021 2021

## INTRODUCTION

### 1 Scope

1.1 These requirements cover fixed and location-dedicated electric room heating equipment rated 600 volts or less to be employed in ordinary locations in accordance with the National Electrical Code, ANSI/NFPA 70.

1.2 These requirements do not cover movable heaters, wall- or ceiling-hung heaters, baseboard heaters, duct heaters, central-heating furnaces, fan-coil units, panel- or cable-type radiant-heating equipment, electric boilers, or any other electric heating equipment or appliances that are covered in or as a part of separate, individual requirements.

### 2 Glossary

2.1 For the purpose of this Standard, the following definitions apply.

2.2 APPLIANCE COUPLER – A single-outlet, female contact device for attachment to a flexible cord as part of a detachable power-supply cord to be connected to an appliance inlet (motor attachment plug).

2.3 APPLIANCE INLET (Motor Attachment Plug) – A male contact device mounted on an end product appliance to provide an integral blade configuration for the connection of an appliance coupler or cord connector.

2.4 APPLIANCE (FLATIRON) PLUG – An appliance coupler type of device having a cord guard and a slot configuration specified for use with heating or cooking appliances.

2.5 CEILING SURFACE-MOUNTED HEATER – A heater that is permanently attached and mounted directly to a ceiling surface in such a manner that tools are necessary for its removal.

2.6 COMMERCIAL/INDUSTRIAL HEATER – Any heater that is either:

a) Rated 2 kilowatts or greater and marked as a commercial/industrial heater in accordance with 59.16,

b) Rated greater than 250 volts,

c) A polyphase heater, or

d) Rated greater than 6 kilowatts.

2.7 COMPONENT – A device or fabricated part of the appliance covered by the scope of a safety standard dedicated to the purpose. When incorporated in an appliance, equipment otherwise typically field installed (e. g. luminaire) is considered to be a component. Unless otherwise specified, materials that compose a device or fabricated part, such as thermoplastic or copper, are not considered components.

2.8 CORD CONNECTOR – A female contact device wired on flexible cord for use as an extension from an outlet to make a detachable electrical connection to an attachment plug or, as an appliance coupler, to an equipment inlet.

2.9 CONTROL CIRCUIT – A circuit that carries the electric signals directing the performance of a controller which, in turn, governs power delivered to a motor or other load. A control circuit does not carry the main power current.

Documents
Document Sharing Hub
Full document details: UL 2021 2021

2.10 FIXED HEATER – A heater that is fastened or otherwise assigned to a specific location, and is permanently wired to the branch circuit.

2.11 LINE-VOLTAGE CIRCUIT – A circuit involving a potential of not more than 600 volts, and having circuit characteristics in excess of those of a low-voltage or an isolated-limited-secondary circuit.

2.12 LOCATION-DEDICATED HEATER – A cord-connected heater that is normally placed in one location for usage such as cord-connected wall- or ceiling-mounted heater, or freestanding cord-connected heater that exceeds the weight or dimension limitations, or both of a movable heater.

2.13 LOW-VOLTAGE CIRCUIT – A circuit involving a potential of not more than 30 volts alternating-current, (42.4 volt peak or direct-current), and supplied by a primary battery or by a standard Class 2 transformer, or by a combination of transformer and fixed impedance that, as a unit, complies with all the performance requirements for a Class 2 transformer. (A circuit derived from a source of supply classified as a line voltage circuit, using resistance in series with the supply circuit as a means of limiting the voltage and current, is not considered to be a low voltage nor an isolated limited secondary circuit.)

2.14 TEMPERATURE CONTROLS – Devices that respond with a change in temperature (thermostatic devices) may be one of the following types:

a) Regulating – Functions only to regulate the temperature of the heater under intended conditions of use, and whose malfunction would not result in a risk of fire.

b) Limiting – Functions only under conditions that produce abnormal temperatures. The malfunction of such a device will result in a risk of fire.

c) Auxiliary – Thermostatic device other than of the regulating or limiting type.

d) Operating Control – A control intended to start or regulate the heater during normal operation. An example would be a temperature-regulating control. An operating control could provide Type 1 or Type 2 action. (See definitions 2.15 – 2.18).

e) Protective Control – A control intended to reduce the risk of electric shock, fire, or injury to persons during abnormal operation of the heater. An example would be a temperature limiting control. A protective control always provides Type 2 action. (See definitions 2.15 – 2.18).

2.15 TYPE 1 ACTION – Automatic action for which the manufacturing deviation and the drift of its operating value, operating time, or operating sequence have not been declared and tested to the Standard for Automatic Electrical Controls – Part 1: General Requirements, UL 60730-1.

2.16 TYPE 2 ACTION – Automatic action for which the manufacturing deviation and the drift of its operating value, operating time, or operating sequence have been declared and tested to the Standard for Automatic Electrical Controls – Part 1: General Requirements, UL 60730-1.

2.17 TYPE 2.H ACTION – So designed that the contacts cannot be prevented from opening and which may automatically reset to the closed position if the reset means is held in the reset position. The control shall not reset automatically at any temperature above -35 °C.

2.18 TYPE 2.J ACTION – So designed that the contacts cannot be prevented from opening, and the control is not permitted to function as an automatic reset device if the reset means is held in the reset position. The control shall not reset automatically at any temperature above -35 °C.

2.19 MOVABLE HEATER – A freestanding cord-connected heater that does not exceed 65 pounds (29.4 kg) and has no dimension greater than 8 feet (2.4 m).

Documents
Document Sharing Hub
Full document details: UL 2021 2021

2.20 WALL (OR CEILING) HUNG HEATER – A cord-connected heater weighing 50 pounds (22.6 kg) or less that is attached to the wall (or ceiling) in such a manner that it can be removed without the use of tools.

2.21 WALL (OR CEILING) MOUNTED HEATER – A heater that is permanently attached to the wall (or ceiling) in such a manner that tools are necessary for its removal.

## 3 Components

### 3.1 General

3.1.1 A component of a product covered by this standard shall:

a) Comply with the requirements for that component as indicated in 3.2 – 3.10;

b) Be used in accordance with its rating(s) established for the intended conditions of use;

c) Be used within its established use limitations or conditions of acceptability;

d) Additionally comply with the applicable requirements of this end product standard; and

*Exception No. 1: A component of a product covered by this standard is not required to comply with a specific component requirement that:*

*a) Involves a feature or characteristic not required in the application of the component in the product;*

*b) Is superseded by a requirement in this standard; or*

*c) Is separately investigated when forming part of another component, provided the component is used within its established ratings and limitations.*

*Exception No. 2: A component that complies with a UL component standard other than those specified in 3.2 – 3.10 is acceptable if:*

*a) The component also complies with the applicable component standard specified in 3.2 – 3.10; or*

*b) The component standard:*

*1) Is compatible with the ampacity and overcurrent protection requirements in the National Electrical Code, ANSI/NFPA 70, where applicable;*

*2) Considers long-term thermal properties of polymeric insulating materials in accordance with the Standard for Polymeric Materials – Long Term Property Evaluations, UL 746B; and*

*3) Any use limitations of the other component standard is identified and appropriately accommodated in the end use application. For example, a component used in a household application, but intended for industrial use and complying with the relevant component standard may assume user expertise not common in household applications.*

3.1.2 Specific components are incomplete in construction features or restricted in performance capabilities. Such components are intended for use only under limited conditions, such as certain temperatures not exceeding specified limits, and shall be used only under those specific conditions.

AVA Documents
Document Sharing Hub

Full document details: UL 2021 2021

3.1.3 A component that is also intended to perform other functions, such as over current protection, ground-fault circuit-interruption, surge suppression, any other similar functions, or any combination thereof, shall comply additionally with the requirements of the applicable UL standard(s) that cover devices that provide those functions.

*Exception: Where these other functions are not required for the application and not identified as part of markings, instructions, or packaging for the appliance, the additional component standard(s) need not be applied.*

3.1.4 A component not anticipated by the requirements of this end product standard, not specifically covered by the component standards in 3.2 – 3.10, and that involves a risk of fire, electric shock, or injury to persons, shall be additionally investigated in accordance with the applicable UL standard, and shall comply with 3.1.1 (b) – (e).

3.1.5 With regard to a component being additionally investigated, reference to construction and performance requirements in another UL end product standard is suitable where that standard anticipates normal and abnormal use conditions consistent with the application of this end product standard.

**3.2 Attachment plugs, receptacles, connectors, and terminals**

3.2.1 Attachment plugs, receptacles, appliance couplers, appliance inlets (motor attachment plugs), and appliance (flatiron) plugs, shall comply with the Standard for Attachment Plugs and Receptacles, UL 498. See 3.2.6.

*Exception: Attachment plugs and appliance couplers integral to cord sets or power supply cords that are investigated in accordance with the Standard for Cord Sets and Power Supply Cords, UL 817 are not required to comply with UL 498.*

3.2.2 Female devices (such as receptacles, appliance couplers, and connectors) that are intended, or that may be used, to interrupt current in the end product, shall be suitably rated for current interruption of the specific type of load, when evaluated with its mating plug or connector. For example, an appliance coupler that can be used to interrupt the current of a motor load shall have a suitable horsepower rating when tested with its mating plug.

3.2.3 Multi-pole splicing wire connectors that are intended to facilitate the connection of hard-wired utilization equipment to the branch-circuit conductors of buildings shall comply with the Standard for Insulated Multi-Pole Splicing Wire Connectors, UL 2459.

3.2.4 Equipment wiring terminals for use with all alloys of copper, aluminum, or copper-clad aluminum conductors, shall comply with the Standard for Equipment Wiring Terminals for Use with Aluminum and/or Copper Conductors, UL 486E.

3.2.5 Terminal blocks shall comply with the Standard for Terminal Blocks, UL 1059, and, if applicable, be suitably rated for field wiring.

3.2.6 Female devices (such as receptacles, appliance couplers, and connectors) that are intended, or that may be used, to interrupt current in the end product, shall be suitably rated for current interruption of the specific type of load, when evaluated with its mating plug or connector. For example, an appliance coupler that can be used to interrupt the current of a motor load shall have a suitable horsepower rating when tested with its mating plug.

Documents
Document Sharing Hub
Full document details: UL 2021 2021

## 3.3 Controls

### 3.3.1 General

3.3.1.1 Auxiliary controls shall be evaluated in accordance with the applicable requirements of this end product standard unless otherwise specified; see 3.3.1.7.

3.3.1.2 Operating (regulating) controls shall be evaluated in accordance with the applicable component standard requirements specified in 3.3.2 – 3.3.6, if applicable, unless otherwise specified in this end product standard ; see 3.3.1.7.

3.3.1.3 Operating controls that rely upon software for the normal operation of the end product where deviation or drift of the control may result in a risk of fire, electric shock, or injury to persons, such as a speed control unexpectedly changing its output, shall comply with one of the following:

a) The Standard for Tests for Safety-Related Controls Employing Solid-State Devices, UL 991, and the Standard for Software in Programmable Components, UL 1998; or

b) The Standard for Automatic Electrical Controls – Part 1: General Requirements, UL 60730-1.

3.3.1.4 Protective (limiting) controls shall be evaluated in accordance with the applicable component standard requirements specified in 3.3.2 – 3.3.6, unless otherwise specified in this end product standard.

3.3.1.5 Solid-state protective controls that do not rely upon software as a protective component shall comply with one of the following:

a) The Standard for Tests for Safety-Related Controls Employing Solid-State Devices, UL 991; or

b) The Standard for Automatic Electrical Controls – Part 1: General Requirements, UL 60730-1, except the Controls Using Software requirements, Clause H 11.12.

3.3.1.6 Solid-state protective controls that rely upon software as a protective component shall comply with one of the following:

a) The Standard for Tests for Safety-Related Controls Employing Solid-State Devices, UL 991, and the Standard for Software in Programmable Components, UL 1998; or

b) The Standard for Automatic Electrical Controls – Part 1: General Requirements, UL 60730-1.

3.3.1.7 An electronic, auxiliary or operating control (e.g. a non-protective control), the failure of which would not increase the risk of fire, electric shock, or injury to persons, need only be subjected to the applicable requirements of this end product standard.

### 3.3.2 Electromechanical and electronic controls

3.3.2.1 A control, other than as specified in 3.3.3 – 3.3.6, shall comply with one of the following:

a) The Standard for Solid-State Controls for Appliances, UL 244A;

b) The Standard for Temperature-Indicating and -Regulating Equipment, UL 873; or

c) The Standard for Automatic Electrical Controls – Part 1: General Requirements, UL 60730-1.

Documents
Document Sharing Hub
Full document details: UL 2021 2021

### 3.3.3 Liquid level controls

3.3.3.1 A liquid level control shall comply with one of the following:

a) The Standard for Solid-State Controls for Appliances, UL 244A;

b) The Standard for Temperature-Indicating and -Regulating Equipment, UL 873;

c) The Standard for Industrial Control Equipment, UL 508; or

d) The Standard for Automatic Electrical Controls – Part 1: General Requirements, UL 60730-1, and

*Deleted*

2) The Standard for Automatic Electrical Controls for Household and Similar Use; Part 2: Particular Requirements for Automatic Electrical Air Flow, Water Flow and Water Level Sensing Controls, UL 60730-2-15.

### 3.3.4 Motor and speed controls

3.3.4.1 A control used to start, stop, regulate or control the speed of a motor shall comply with one of the following:

a) The Standard for Solid-State Controls for Appliances, UL 244A;

b) The Standard for Temperature-Indicating and -Regulating Equipment, UL 873;

c) The Standard for Industrial Control Equipment, UL 508;

d) The Standard for Adjustable Speed Electrical Power Drive Systems – Part 5-1: Safety Requirements – Electrical, Thermal and Energy, UL 61800-5-1; or

e) The Standard for Automatic Electrical Controls – Part 1: General Requirements, UL 60730-1.

### 3.3.5 Pressure controls

3.3.5.1 A pressure control shall comply with one of the following:

a) The Standard for Temperature-Indicating and -Regulating Equipment, UL 873;

b) The Standard for Industrial Control Equipment, UL 508;

c) The Standard for Automatic Electrical Controls – Part 1: General Requirements, UL 60730-1; and the Standard for Automatic Electrical Controls for Household and Similar Use; Part 2: Particular Requirements for Automatic Electrical Pressure Sensing Controls Including Mechanical Requirements, UL 60730-2-6.

### 3.3.6 Timer controls

3.3.6.1 A timer control shall comply with one of the following:

a) The Standard for Solid-State Controls for Appliances, UL 244A; or

b) The Standard for Automatic Electrical Controls – Part 1: General Requirements, UL 60730-1; and the Standard for Automatic Electrical Controls for Household and Similar Use; Part 2: Particular Requirements for Timers and Time Switches, UL 60730-2-7.

AVA Documents
Document Sharing Hub
Full document details: UL 2021 2021

### 3.4 Cords, cables, and internal wiring

3.4.1 A cord set or power supply cord shall comply with the Standard for Cord Sets and Power Supply Cords, UL 817.

3.4.2 Flexible cords and cables shall comply with the Standard for Flexible Cords and Cables, UL 62. Flexible cord and cables are considered to comply with this requirement when pre-assembled in a cord set or power supply cord complying with the Standard for Cord Sets and Power Supply Cords, UL 817.

3.4.3 Internal wiring composed of insulated conductors shall comply with the Standard for Appliance Wiring Material, UL 758.

*Exception No. 1: Insulated conductors need not comply with UL 758 if they comply with one of the following:*

*a) The Standard for Thermoset-Insulated Wires and Cables, UL 44;*

*b) The Standard for Thermoplastic-Insulated Wires and Cables, UL 83;*

*c) The applicable UL standard(s) for other insulated conductor types specified in Chapter 3, Wiring Methods and Materials, of the National Electrical Code, ANSI/NFPA 70.*

*Exception No. 2: Insulated conductors for specialty applications (e.g. data processing or communications) and located in a low-voltage circuit not involving the risk of fire, electric shock or injury to persons need not comply with UL 758.*

### 3.5 Film-coated wire (magnet wire)

3.5.1 The component requirements for film coated wire and Class 105 (A) insulation systems are not specified.

3.5.2 Film coated wire in intimate combination with one or more insulators, and incorporated in an insulation system rated Class 120 (E) or higher, shall comply with the magnet wire requirements in the Standard for Systems of Insulating Materials – General, UL 1446.

### 3.6 Insulation systems

3.6.1 Materials used in a Class 105 (A) insulation system shall comply with 19.2.

3.6.2 Materials used in an insulation system that operates above Class 105 (A) temperatures shall comply with the Standard for Systems of Insulating Materials – General, UL 1446.

3.6.3 All insulation systems employing integral ground insulation shall comply with the requirements specified in the Standard for Systems of Insulating Materials – General, UL 1446.

### 3.7 Printed wiring boards

3.7.1 Printed wiring boards, including the coatings, shall comply with the Standard for Printed Wiring Boards, UL 796.

*Exception: A printed-wiring board in a Class 2 nonsafety circuit is not required to comply with the bonding requirements in UL 796 if the board is separated from parts of other circuits such that loosening of the bond between the foil conductor and the base material will not result in the foil conductors or components coming in contact with parts of other circuits of the control or of the end-use product.*

AVA Documents
Document Sharing Hub
Full document details: UL 2021 2021

3.7.2 A printed-wiring board containing circuitry in a line-connected circuit or a safety circuit shall comply with the direct-support requirements for insulating materials in Electrical Insulation, Section 14 of this end product standard.

3.7.3 Unless otherwise specified, the flammability class and temperature rating shall be that as specified in Electrical Insulation, Section 17 of this end product standard.

### 3.8 Semiconductors and small electronic components

3.8.1 A power switching semiconductor device that is relied upon to provide isolation to ground shall comply with the Standard for Optical Isolators, UL 1577. The Dielectric Voltage Withstand Tests required by UL 1577 shall be conducted applying the requirements of the Dielectric Voltage Withstand Test, Section 46, of this end product standard.

3.8.2 An optical isolator that is relied upon to provide isolation between primary and secondary circuits or between other circuits as required by this end product standard shall comply with the Standard for Optical Isolators, UL 1577. The Dielectric Voltage Withstand Tests required by UL 1577 shall be conducted applying the requirements in Dielectric Voltage Withstand Test, Section 46 of this end product standard.

3.8.3 Except as specified in 3.8.4, component requirements are not specified for small electronic components on printed wiring boards, including diodes, transistors, resistors, inductors, integrated circuits, and capacitors not directly connected to the supply source.

3.8.4 Where an electronic component is determined to be a critical component during the Abnormal Operation Tests, Section 32, one of the following standards shall be applied:

a) The Standard for Tests for Safety-Related Controls Employing Solid-State Devices, UL 991, and as applicable, the Standard for Software in Programmable Components, UL 1998 for controls that rely upon software as a protective component; or

b) The Standard for Automatic Electrical Controls – Part 1: General Requirements, UL 60730-1.

3.8.5 A critical component, as specified in 3.8.4, is a component that performs one or more safety-related functions whose failure results in a condition, such as the risk of fire, electric shock, or injury to persons, in the end product application.

3.8.6 A critical component as specified in 3.8.4, may also be identified using a failure-mode and effect analysis (FMEA) in accordance with the Failure-Mode and Effect Analysis (FMEA) requirements in the Standard for Tests for Safety-Related Controls Employing Solid-State Devices, UL 991.

3.8.7 Portions of a circuit comprised of a microcontroller or other programmable device that performs a back-up, limiting, or other safety function intended to reduce the risk of fire, electric shock, or injury to persons shall comply with the Standard for Automatic Electrical Controls – Part 1: General Requirements, UL 60730-1, Annex H.

### 3.9 Supplemental insulation, insulating bushings, and assembly aids

3.9.1 The requirements for supplemental insulation (e. g. tape, sleeving or tubing) are not specified unless the insulation or device is required to comply with 15.3 or a performance requirement of this end product standard. In such cases, the insulation shall comply with the following applicable standards:

a) Insulating tape shall comply with the Standard for Polyvinyl Chloride, Polyethylene, and Rubber Insulating Tape, UL 510;

b) Sleeving shall comply with the Standard for Coated Electrical Sleeving, UL 1441; or

Documents
Document Sharing Hub
Full document details: UL 2021 2021

c) Tubing shall comply with the Standard for Extruded Insulating Tubing, UL 224.

3.9.2 Wire positioning devices shall comply with the requirements in Electrical Insulation, Section 17. A device that complies with the Standard for Positioning Devices, UL 1565, is considered to comply with this requirement.

3.9.3 Insulating bushings that comply with the requirements in General, Section 3.1, of this end product standard, and the Standard for Insulating Bushings, UL 635 are considered to comply with the requirements of this end product standard. Tests specified in this end product standard (e.g. Strain Relief Test, Section 13.3) may still need to be performed to confirm the combination of the insulating bushing and the supporting part comply with the intent of the requirements.

**3.10 Switches**

3.10.1 Switches shall comply with one of the following:

a) *Deleted*

b) The Standard for Switches for Appliances – Part 1: General Requirements, UL 61058-1;

c) The Standard for General-Use Snap Switches, UL 20; or

d) The Standard for Nonindustrial Photoelectric Switches for Lighting Control, UL 773A.

*Exception: Switching devices that comply with the applicable UL standards for specialty applications (e.g. transfer switch equipment), industrial use (e.g. contactors, relays, auxiliary devices), or are integral to another component (e.g. switched lampholder) need not comply with this requirement.*

3.10.2 A clock-operated switch, in which the switching contacts are actuated by a clock-work, by a gear-train, by electrically-wound spring motors, by electric clock-type motors, or by equivalent arrangements shall comply with one of the following:

a) The Standard for Clock-Operated Switches, UL 917; or

b) The Standard for Automatic Electrical Controls – Part 1: General Requirements, UL 60730-1, and the Standard for Automatic Electrical Controls for Household and Similar Use; Part 2: Particular Requirements for Timers and Time Switches, UL 60730-2-7.

3.10.3 A timer or time switch, incorporating electronic timing circuits or switching circuits, with or without separable contacts, shall comply with the requirements for an operating control with Type 1 action for 6000 cycles of operation, or as a manual control for 5000 cycles of operation, in accordance with one of the following:

a) The Standard for Solid-State Controls for Appliances, UL 244A; or

b) The Standard for Automatic Electrical Controls – Part 1: General Requirements, UL 60730-1; and the Standard for Automatic Electrical Controls for Household and Similar Use; Part 2: Particular Requirements for Timers and Time Switches, UL 60730-2-7.

3.10.4 A timer or time switch, incorporating electronic timing circuits or switching circuits, with or without separable contacts, that functions as a protective control, shall comply with the requirements for a protective control; see 3.3.1.3.

Documents
Document Sharing Hub
Full document details: UL 2021 2021

### 3.11 Transformers

3.11.1 General-purpose transformers shall comply with the Standard for Low Voltage Transformers – Part 1: General Requirements, UL 5085-1; and the Standard for Low Voltage Transformers – Part 2: General Purpose Transformers, UL 5085-2.

*Exception No. 1: A transformer that is completely enclosed within the end product enclosure, and that complies with the applicable construction and performance requirements of this end product standard when tested in conjunction with the end product, complies with the intent of this requirement.*

*Exception No. 2: A transformer that complies with the Standard for Transformers and Motor Transformers for Use in Audio-, Radio-, and Television-Type Appliances, UL 1411, and that is used in a circuit involving an audio or video component complies with the intent of this requirement.*

## 4 Units of Measurement

4.1 Values stated without parentheses are the requirement. Values in parentheses are explanatory or approximate information.

4.2 Unless indicated otherwise, all voltage and current values mentioned in this Standard are rms.

## 5 References

5.1 Any undated reference to a code or standard appearing in the requirements of this standard shall be interpreted as referring to the latest edition of that code or standard.

## 6 General

6.1 A location-dedicated heater that is considered likely to be operated as a movable heater shall also comply with the requirements for movable heaters.

6.2 If the operation of a heater involves the generation and confining under pressure of steam or other gas, consideration is to be given to the possibility of risk of explosion incident to such operation. This applies in the case of an appliance having immersed electrodes, if the electrolysis of water may result in the accumulation of oxygen and hydrogen. The appliance is not acceptable unless its strength is such that it will withstand any risk of explosion that may be involved.

# CONSTRUCTION

## 7 Enclosure

7.1 The enclosure of a heater shall be so formed and assembled that it will have the strength and rigidity necessary to resist the abuses likely to be encountered during its intended service. The degree of resistance inherent in the appliance shall preclude total or partial collapse with the attendant reduction of spacings, loosening or displacement of parts, and other serious defects which alone or in combination constitute a risk of fire, electric shock, explosion, or injury to persons.

7.2 Among the factors taken into consideration if an enclosure is being judged for acceptability are its:

a) Mechanical strength,

b) Resistance to impact,

c) Moisture-absorption properties,

Documents
Document Sharing Hub

Full document details: UL 2021 2021

d) Flammability,

e) Resistance to corrosion, and

f) Resistance to distortion at temperatures to which the enclosure may be subjected under conditions of intended or abnormal use.

For the requirements for a polymeric enclosure or part of an enclosure of a polymeric material, see Polymeric Materials, Section 9.

7.3 The enclosure of a heater intended for permanent installation shall be provided with means for mounting in the intended manner. Any fittings – such as brackets, hangers, or the like – necessary for mounting shall be furnished with the heater.

7.4 The enclosure of a heater shall prevent molten metal, burning insulation, flaming particles, or the like from falling on combustible materials, including the surface upon which the heater is supported. See 7.7.

7.5 The requirement in 7.4 necessitates use of a barrier of noncombustible material:

a) Under a motor unless:

1) The structural parts of the motor or of the heater provide the equivalent of such a barrier.

2) The protection provided with the motor is such that no burning insulation or molten material falls to the surface that supports the heater if the motor is energized under each of the following fault conditions:

i) Open main winding,

ii) Open starting winding, and

iii) Starting switch short-circuited, or

3) The motor is provided with a thermal motor protector (a protective device that is sensitive to both temperature and current) that will prevent the temperature of the motor windings from becoming more than 125°C (257°F) under the maximum load under which the motor will run without causing the protector to cycle, and from becoming more than 150°C (302°F) with the rotor of the motor locked.

b) Under wiring, unless the wire insulation is of the flame-retardant type, VW-1 (FR-1) or the equivalent.

It will also necessitate that a switch, transformer, relay, solenoid, or the like be individually and completely enclosed except at terminals, unless it can be shown that malfunction of the component would not result in a risk of fire or unless there are no openings in the bottom of the enclosure. An opening in the bottom of the enclosure is not acceptable if it is located directly below field- or factory-made splices or overload or overcurrent protective devices.

7.6 A heater intended for installation in a dropped ceiling shall be provided with adequate means for being mounted on and secured to adjacent T-bars. See also 59.31.

7.7 A heater intended for ceiling or high-wall mounting may be exempted from the requirements in 7.4. The acceptability of the enclosure of such a heater will be judged on the basis of its design and construction.

Documents
Document Sharing Hub

Full document details: UL 2021 2021

7.8 Except as indicated in 7.9, if openings for ventilation are provided in the enclosure of a heater or in an externally mounted component intended for permanent connection to the power supply, they shall be so located that they will not vent into concealed spaces of a building structure such as into false-ceiling space, into hollow spaces in the wall, or the like when the appliance is installed as intended.

7.9 The requirement in 7.8 does not apply to an opening for a mounting screw or nail if:

a) No such opening has a dimension more than 17/64 inch (6.75 mm) or an area more than 0.055 square inch (35.5 $mm^2$), and

b) There are no more than four holes in the rear of the enclosure and no more than two holes in each of the other four sides of the enclosure.

7.10 Other openings for a manufacturing operation, such as for paint drainage, for locating the part during a stamping or similar production operation, may be provided, but they shall also comply with 7.9. Lanced openings, tabs, or the like, if the displaced metal is retained, are acceptable if the openings are substantially baffled by the displaced metal or closed up by positively retained mounting brackets, springs used to support grilles, and the like.

7.11 Except as noted in 7.12, an opening for ventilation in the enclosure, other than in the bottom, of a heater and an opening associated with the dissipation of heated air from the element shall be provided with one or more baffles that will prevent the emission of flame, molten metal, burning insulation, or the like from the heater.

7.12 In a compartment other than one that houses an overload or overcurrent protective device, the baffles mentioned in 7.11 may be omitted if:

a) No ventilating opening in a vertical wall, other than one associated with the dissipation of heated air from the elements during intended operation of the heater, is more than 3/8 inch (9.5 mm) in width, or

b) The heater is constructed to be acceptable for the purpose, as shown by appropriate investigation.

7.13 Cast- and sheet-metal portions of the enclosure shall not be thinner than indicated in Table 7.1 unless the enclosure is found to be acceptable when judged under considerations such as are mentioned in 7.2 and 7.14.

7.14 In addition to being considered with reference to the factors mentioned in 7.2, an enclosure of sheet metal is to be judged with respect to its size and shape, the thickness of metal, and its acceptability for the particular application, considering the intended use of the heater.

7.15 Sheet metal to which a wiring system is to be connected in the field shall have an average thickness not less than 0.032 inch (0.81 mm) if uncoated steel, not less than 0.034 inch (0.86 mm) if galvanized steel, and no less than 0.045 inch (1.14 mm) if nonferrous.

7.16 At points where the face of an attachment-plug receptacle projects through it, the enclosure of a heater shall have a thickness not less than:

a) 0.032 inch (0.81 mm) if of ferrous metal,

b) 0.045 inch (1.14 mm) if of nonferrous metal, and

c) 0.10 inch (2.5 mm) if of insulating material, except that an enclosure of insulating material may be of lesser thickness if formed or reinforced to provide physical strength. The insulating material shall be noncombustible.

AVA Documents
Document Sharing Hub
Full document details: UL 2021 2021

7.17 An electrical part of a heater shall be so located or enclosed that protection against unintentional contact with uninsulated live parts will be provided, except that this requirement does not apply to the radiating portion of an open-wire element and the connections immediately adjacent to the radiating element. See 7.18, 28.6, 28.15, and 59.25. Insulated motor brush caps do not require additional enclosures.

7.18 The requirement in 7.17 does not apply to the radiating sheath of an isolated metal-clad element in a heater having provision for grounding the enclosure, although such sheath is considered to be a bare live part when spacings are being measured.

7.19 In determining if an opening in an enclosure is acceptable, consideration is to be given to:

a) The proximity of uninsulated live parts (as determined by applying 7.17, 7.18, 7.20, 7.26, and 7.33) and

b) The possibility of the emission of burning insulation, molten metal, and the like through the opening (as determined by applying 7.4 – 7.12).

**Table 7.1**
**Minimum acceptable thicknesses of enclosure material**

| Metal | At small, flat, unreinforced surfaces and at surfaces that are reinforced by curving, ribbing and the like (or are otherwise of a shape and/or size) to provide mechanical strength | | At relatively large unreinforced flat surfaces | |
|---|---|---|---|---|
| | inches | millimeters | inches | millimeters |
| Die-cast | 3/64 | 1.2 | 5.64 | 2.0 |
| Cast malleable iron | 1/16 | 1.6 | 3/32 | 2.4 |
| Other cast metal | 3/32 | 2.4 | 1/8 | 3.2 |
| Uncoated sheet steel | 0.026[a] | 0.66[a] | – | – |
| Galvanized sheet steel | 0.029[a] | 0.74[a] | – | – |
| Nonferrous sheet metal | 0.036[a] | 0.91[a] | – | – |

[a] Thinner sheet metal may be employed if found to be acceptable when the enclosure is judged under considerations such as those mentioned in 7.2 and 7.14.

7.20 To reduce the likelihood of unintentional contact that may involve a risk of electric shock from an uninsulated live part or film-coated wire, an opening in an enclosure shall comply with either (a) or (b).

a) For an opening that has a minor dimension (see 7.24) less than 1 inch (25.4 mm), such a part or wire shall not be contacted by the probe illustrated in Figure 7.3.

b) For an opening that has a minor dimension of 1 inch or more, such a part or wire shall be spaced from the opening as specified in Table 7.2.

*Exception: An integral enclosure of a motor need not comply with these requirements if it complies with the requirements in 7.21.*

7.21 With respect to a part or wire as mentioned in 7.20, in an integral enclosure of a motor as mentioned in the Exception to 7.20:

a) An opening that has a minor dimension (see 7.24) less than 3/4 inch (19.1 mm) is acceptable if:

1) Film-coated wire cannot be contacted by the probe illustrated in Figure 7.2;

Documents
Document Sharing Hub
Full document details: UL 2021 2021

2) In a directly accessible motor (see 7.25), an uninsulated live part cannot be contacted by the probe illustrated in Figure 7.4; or

3) In an indirectly accessible motor (see 7.25), an uninsulated live part cannot be contacted by the probe illustrated in Figure 7.1.

b) An opening that has a minor dimension of 3/4 inch (19.1 mm) or more is acceptable if a part or wire is spaced from the opening as specified in Table 7.2.

**Table 7.2**
**Minimum acceptable distance from an opening to a part that may involve a risk of electric shock**

| Minor dimension[a] of opening | | Minimum distance from opening to part | |
|---|---|---|---|
| inches[b] | (mm)[b] | inches[b] | (mm)[b] |
| 3/4[c] | (19.1) | 4-1/2 | (114.0) |
| 1[c] | (25.4) | 6-1/2 | (165.0) |
| 1-1/4 | (31.8) | 7-1/2 | (190.0) |
| 1-1/2 | (38.1) | 12-1/2 | (318.0) |
| 1-7/8 | (47.6) | 15-1/2 | (394.0) |
| 2-1/8 | (54.0) | 17-1/2 | (444.0) |
| d | | 30 | (762.0) |

[a] See 7.24.

[b] Between 3/4 inch (19.1 mm) and 2-1/8 inches (54.0 mm), interpolation is to be used to determine a value between values specified in the table.

[c] Any dimension less than 1 inch (25.4 mm) applies to a motor only.

[d] More than 2-1/8 (54.0 mm) inches, but not more than 6 inches (152.0 mm).

7.22 The probes mentioned in 7.20 and 7.21 and illustrated in Figure 7.1, Figure 7.2, Figure 7.3, and Figure 7.4 shall be applied to any depth that the opening will permit; and shall be rotated or angled before, during, and after insertion through the opening to any position that is necessary to examine the enclosure. The probes illustrated in Figure 7.3 and Figure 7.4 shall be applied in any possible configuration; and, if necessary, the configuration shall be changed after insertion through the opening.

**Figure 7.1**

**Probe for uninsulated live parts**

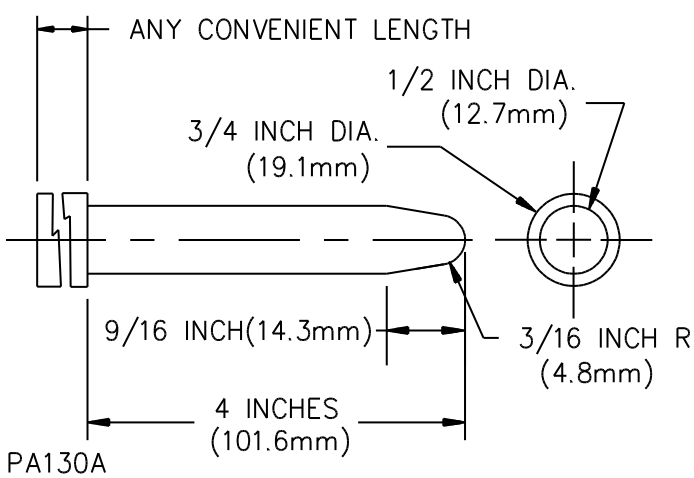


Documents
Document Sharing Hub
Full document details: UL 2021 2021

**Figure 7.2**

**Probe for film-coated wire**

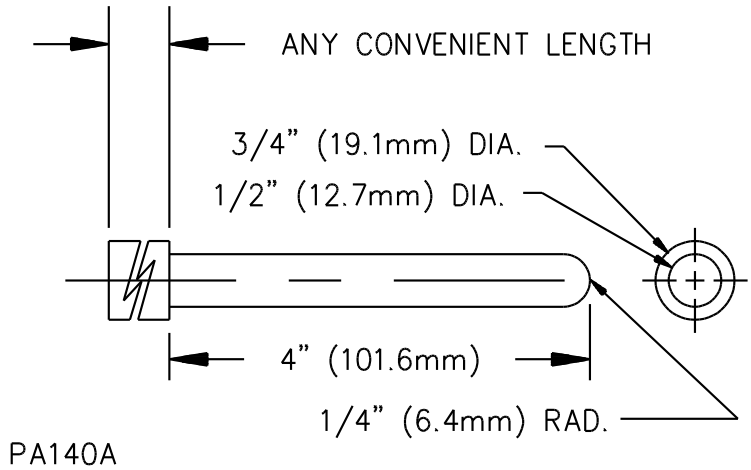


7.23 The probes mentioned in 7.22 and 7.24 shall be used as measuring instruments to judge the accessibility provided by an opening, and not as instruments to judge the strength of a material; they shall be applied with the minimum force necessary to determine accessibility.

7.24 With reference to the requirements in 7.20 and 7.21, the minor dimension of an opening is the diameter of the largest cylindrical probe having a hemispherical tip that can be inserted through the opening.

7.25 With reference to the requirements in 7.21, an indirectly accessible motor is a motor:

a) That is accessible only by opening or removing a part of the outer enclosure, such as a guard or panel, that can be opened or removed without using a tool, or

b) That is located at such a height or is otherwise guarded or enclosed so that it is unlikely to be contacted.

A motor in a ceiling insert heater or in a heater marked in accordance with 59.23 is considered to be an indirectly accessible motor. A directly accessible motor is a motor:

c) That can be contacted without opening or removing any part or

d) That is located so as to be accessible to contact.

Documents
Document Sharing Hub
Full document details: UL 2021 2021

**Figure 7.3**

**Articulate probe with web stop**

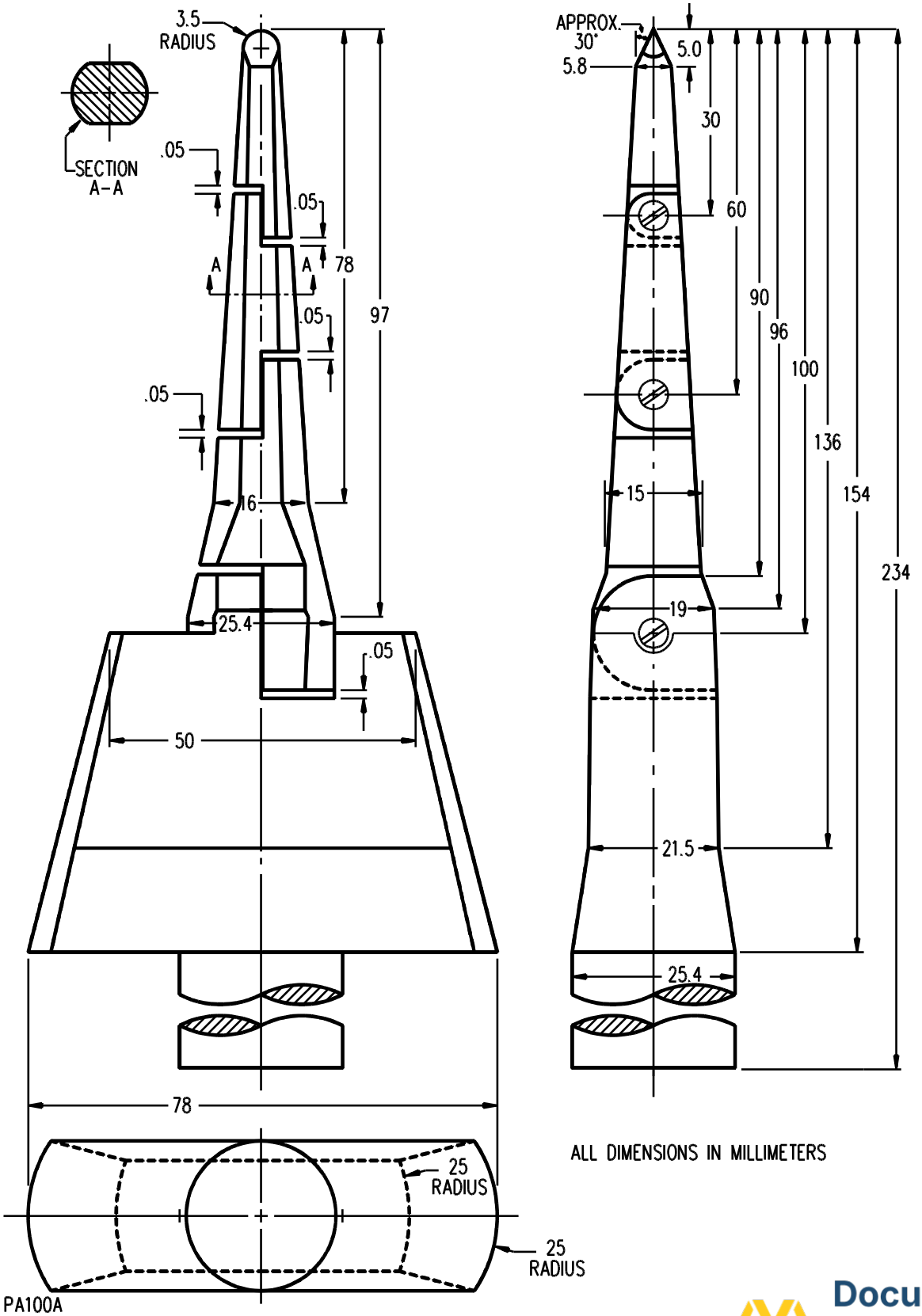


Documents
Document Sharing Hub
Full document details: UL 2021 2021

**Figure 7.4**

**Articulate probe**

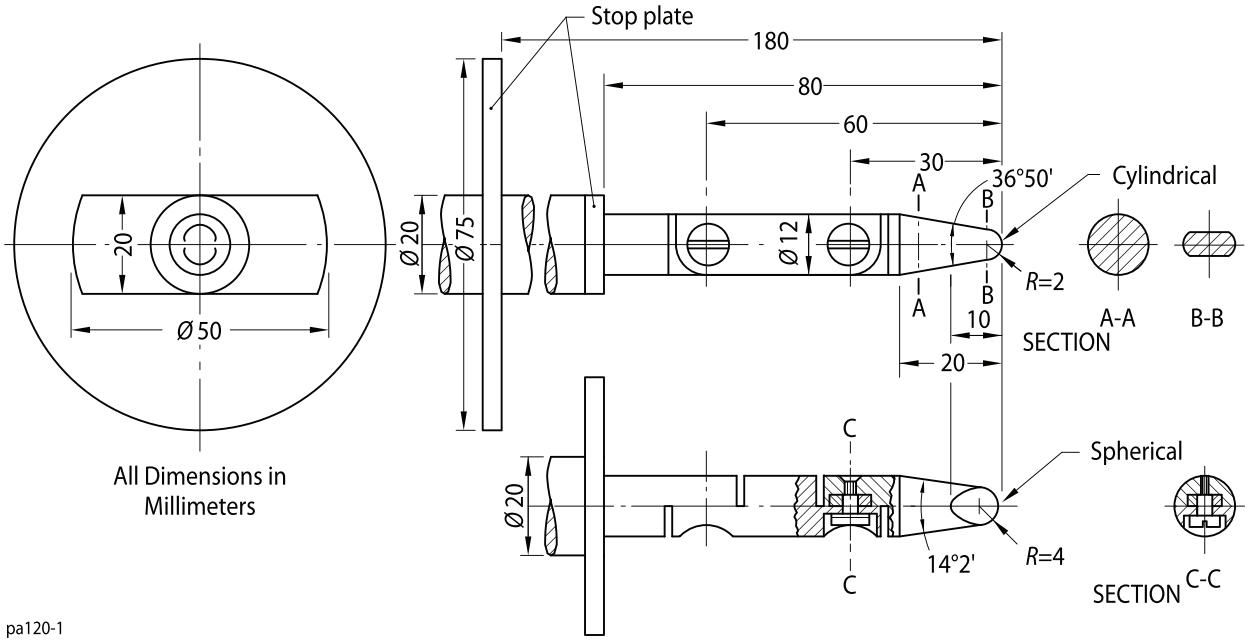


7.26 During the examination of a heater in connection with the requirements in 7.17 – 7.25, a part of the outer enclosure that may be removed without the use of tools by the user of the heater (to permit the attachment of accessories, to allow access to means for making operating adjustments, or for other reasons) is to be disregarded– that is, it will not be assumed that the part in question affords protection against the risk of electric shock. A warning marking such as that specified in 59.7 is not considered to adequately protect against this risk of electric shock.

7.27 With reference to the requirements in 7.20 and 7.21, insulated brush caps are not required to be additionally enclosed.

7.28 During the examination of a heater in connection with the requirements in 7.17 – 7.25, a part of the outer enclosure that is removed with the use of tools by the user of the heater to permit resetting of the manual reset temperature limiting control is to be disregarded – that is, it will not be assumed that the part in question affords protection against the risk of electric shock. A warning marking such as that specified in 59.7 is not considered to adequately protect against this risk of electric shock.

*Exception: A heater marked in accordance with 59.7 and that complies with 7.29 need not comply with this requirement.*

7.29 A product may employ a resettable limit control when the reset means is inaccessible if designed in a manner that the product cannot be disassembled with readily available tools, such as screw drivers, wrenches, and the like, and the product is marked in accordance with 59.7. Such fasteners as rivets, one way screws, fasteners not readily accessible after assembly, and the like would be considered as causing the product to be not readily disassembled.

Documents
Document Sharing Hub
Full document details: UL 2021 2021

7.30 The rotor of a motor, pulley, belt, gear, or the like shall be enclosed or guarded to acceptably reduce the risk of injury to persons.

7.31 Any manual adjustable controls shall be resettable or adjustable so that moving or electrical parts will not cause a risk of fire, electric shock, or injury to persons to occur during the resetting or adjustment procedure. See 7.26 and 7.28 and Figure 7.5.

7.32 With reference to the requirement in 7.30, the degree of protection required of the enclosure depends upon the general design and intended use of the heater. Among the factors to be taken into consideration in judging the acceptability of the moving part are:

a) The degree of exposure,

b) The sharpness of the moving part,

c) The likelihood of unintentional contact with the moving part,

d) The speed of movement of the part, and

e) The likelihood of fingers, arms, or clothing being drawn into the moving part (such as at points where gears mesh, where a belt travels onto a pulley, or where moving parts close in a pinching or shearing action).

7.33 An uninsulated live part shall not be located behind an opening that may be used to make a user service function such as adjusting or resetting a manual limit control if a 1/8-inch (3.2-mm) diameter straight rod can be made to touch the live part when the rod is inserted through the opening and moved to all positions possible without producing an angle of more than 30 degrees between the rod and the line drawn between the center of the opening and the center of the face of the part to be adjusted. The length of the rod beyond the opening is not to exceed the distance between the opening and the face of the adjustable mechanism by more than 3 inches (76 mm). See Figure 7.5.

Documents
Document Sharing Hub
Full document details: UL 2021 2021

**Figure 7.5**

**Accessibility of live part through enclosure opening**

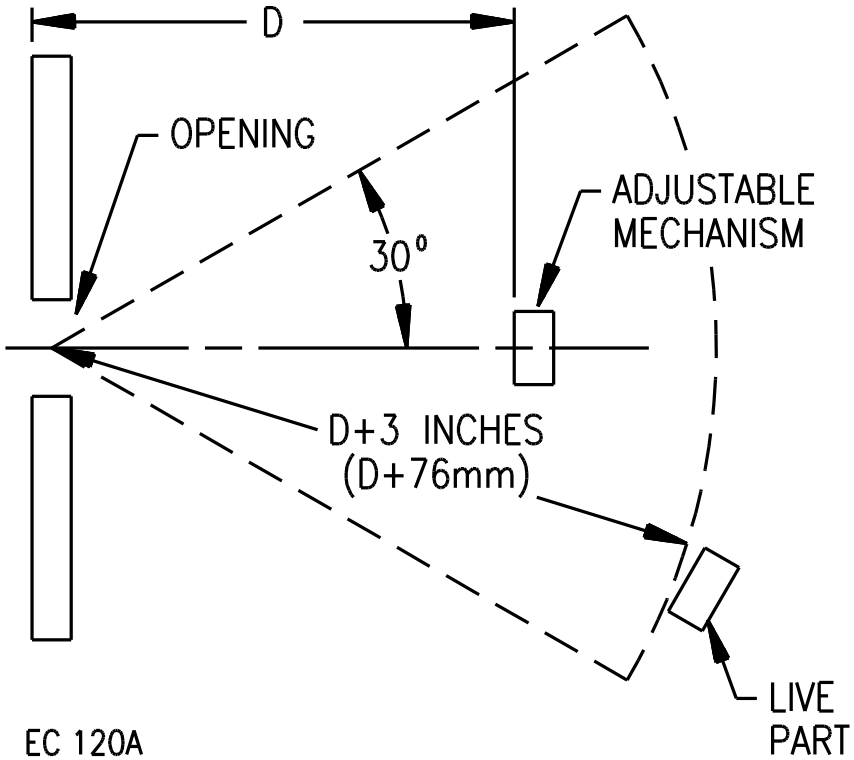


7.34 The door or cover of an enclosure shall be provided with means for holding it securely in place in the closed position.

7.35 The door or cover of an enclosure shall be hinged:

a) If it gives access to any fuse, circuit breaker, or manually resettable thermal cutoff, and

b) If uninsulated live parts are exposed during the replacement of the fuse or resetting of the manual resettable device.

Such a door or cover shall also be provided with a latch or the equivalent and a captive screw to secure the door or cover in place.

7.36 A door or cover giving access to any overload-protective device in other than a low-voltage circuit shall be tight fitting and shall suitably overlap the surface of the enclosure around the opening.

7.37 A spring latch, a magnetic latch, a dimple, or any other mechanical arrangement that will hold the door in place and would require some effort on the user's part to open it is considered to be an acceptable means for holding the door in place as required in 7.35.

7.38 A component of a heater that is likely to need inspection, replacement, cleaning, or other servicing shall be as accessible as practicable, and shall be accessible without the use of special tools if it is intended to be manually operated or adjusted or if it will definitely require periodic servicing.

Documents
Document Sharing Hub
Full document details: UL 2021 2021

## 8 Parts Subject to Pressure

8.1 Except as noted in 8.3 a pressure vessel having an inside diameter, width, height, or cross section diagonal of more than 6 inches (152 mm) with no limitations on length of vessel, and subject to a pressure of more than 15 pounds force per square inch gauge (psig) (103 kilonewtons per square meter or 10.5 grams force per square millimeter) shall be certified by the National Board of Boiler and Pressure-Vessel Inspectors and marked in accordance with the appropriate boiler and pressure vessel code symbol of the American Society of Mechanical Engineers (ASME) – "H", "M", "S", or "U" – for a working pressure no less than the pressure determined by applying 8.3.

8.2 If a pressure vessel, because of its application, is not covered under the inspection procedures of the ASME code, it shall be so designed and constructed that it will comply with the requirements in 8.3.

8.3 Except as noted in 8.5, a component of a heater (piping, fittings, air vents, and the like) that is subject to air or vapor pressure (including the vapor pressure of a superheated fluid) during intended or abnormal operation shall be capable of withstanding without failure a pressure equal to five times the working pressure.

8.4 As used in 8.3, working pressure may be defined as the highest of the following:

a) The highest pressure achieved during normal or abnormal operation of the heater,

b) The maximum pressure setting of a pressure relief device provided as part of the assembly,

c) The working pressure marked on the part.

8.5 A test need not be performed to determine whether or not a part complies with the requirement in 8.3 if the strength of the part is acceptable for the purpose as a result of its material and dimensions – for example, copper or steel pipe of standard sizes and provided with standard fittings might be considered to have the necessary strength.

8.6 If a test is necessary to determine if a part complies with the requirement in 8.3, two samples of the part are to be subjected to a hydrostatic-pressure test. Each sample is to be filled with water to exclude air and is to be connected to a hydraulic pump. The pressure is to be raised gradually to the specified test value, and is to be held at that value for 1 minute. The results are not acceptable if either sample bursts or leaks, except as indicated in 8.7.

8.7 Leakage at a gasket during the hydrostatic-pressure test is not considered to constitute failure unless it occurs at a pressure 40 percent or less of the required test value.

8.8 A means for safely relieving pressure shall be provided for all parts in which pressure might be generated in the event of fire.

8.9 Pressure-relief devices (see 8.14), fusible plugs, soldered joints, nonmetallic tubing, or other equivalent pressure-relief means may be employed to comply with the requirement in 8.8.

8.10 There shall be no shut-off valve between the pressure relief means and the parts that it is intended to protect.

8.11 A vessel having an inside diameter, width, height or cross-section diagonal of more than 3 inches (76.2 mm) and subject to air or steam pressure generated or stored within the appliance shall be protected by a pressure-relief device.

Documents
Document Sharing Hub

Full document details: UL 2021 2021

8.12 The start-to-discharge pressure setting of the pressure-relief device shall not be higher than the marked maximum working pressure of the vessel. The discharge rate of the device shall be great enough to relieve the pressure.

8.13 A pressure-relief device shall:

a) Be connected as close as possible to the pressure vessel or parts of the system that it is intended to protect,

b) Be so installed that it is accessible for inspection and repair and cannot be readily rendered inoperative,

c) Have its discharge opening so located and directed that the risk of scalding has been reduced to an acceptable degree, and

d) Have its discharge opening so located and directed that operation of the device will not deposit moisture on uninsulated live parts, or on insulation or components affected detrimentally by moisture.

8.14 A pressure-relief device having an adjustable setting is to be judged on the basis of its maximum setting unless the adjusting means is sealed at a lower setting.

8.15 A pressure-relief device is considered to be a pressure-actuated valve or rupture member designed to relieve excessive pressures automatically.

8.16 If a pressure-relief device is required, the electrical control responsible for limiting the pressure in the vessel shall be capable of performing under rated load for 100,000 cycles of operation and shall prevent the pressure from exceeding 90 percent of the relief-device setting under any condition of intended operation.

## 9 Polymeric Materials

9.1 Determination of the acceptability of a polymeric material shall be made based on the Standard for Polymeric Materials – Use in Electrical Equipment Evaluations, UL 746C.

## 10 Assembly

10.1 Uninsulated live parts, a heating element, a switch, a lampholder, a temperature control, an attachment-plug receptacle, a motor-attachment plug, or similar component shall be mounted securely and, except as noted in 10.2, 10.3 and 10.9, shall be prevented from turning. See 10.4 and Strength of Adjustment Stop Test, Section 54.

10.2 The requirement that a switch or a control be prevented from turning may be waived if all five of the following conditions are met:

a) The switch or the control is of a plunger or other type that does not tend to rotate when operated. A toggle switch is considered to be subject to forces that tend to turn the switch or the control during operation of the switch,

b) The means for mounting the switch or the control is not subject to loosening as the result of its operation,

c) The spacings are not reduced below the minimum acceptable values if the switch or the control rotates,

Documents
Document Sharing Hub
Full document details: UL 2021 2021

d) The operation of the switch or the control is by mechanical means rather than direct contact by persons, and

e) The shifting of the switch or the control in position does not result in false indication of its setpoint with respect to the setpoint markings.

10.3 A lampholder of a type in which the lamp cannot be replaced (such as a neon pilot or indicator light in which the lamp is sealed in nonremovable jewel) need not be prevented from turning if rotation cannot reduce spacings below the minimum acceptable values.

10.4 The means for preventing the turning mentioned in 10.1 is to consist of more than friction between surfaces – for example, a toothed lock washer which provides both spring take-up and an interference lock is acceptable as means to prevent turning of a small stem-mounted switch or other device having a single-hole mounting means.

10.5 Uninsulated live parts shall be secured to the base or mounting surface that they will be prevented from turning or shifting in position if such motion may result in a reduction of spacings below the minimum acceptable values indicated in 30.1 – 30.6.

10.6 Friction between surfaces is not acceptable as a means to prevent shifting or turning of live parts, but a toothed lock washer which provides both spring take-up and an interference lock is acceptable.

10.7 Any heater projections such as guards or grilles that are intended to guard hot heater surfaces shall be positively secured to the heater such as by screws, rivets or welding or being engaged in slots so that they cannot be removed without the use of tools, breaking or permanent bending or distortion.

10.8 A heater shall be completely assembled when it is shipped from the factory, except as noted in 10.9, when the heater is partially disassembled to facilitate packaging or installation, and the assembly of the heater is readily accomplished without causing a risk of fire, electric shock, or injury to persons.

10.9 A heating element that is not mounted securely in its intended position shall be acceptable for assembly during installation of a fixed heater (see 2.4) when all the following are met:

a) The heating element is packed in the same overall carton of the heater, or the heating element is packed in a separate carton that is secured together to the heater carton (such as by steel strapping or strong tape) so that the two cartons do not become separated during shipment,

b) The interconnecting leads and wiring intended for the electrical connection of the heating element are housed entirely within the heater, and the electrical connections are made with integral plugs and receptacles arranged so that no uninsulated live part capable of causing electric shock is accessible to unintentional contact when the heating element is not in place, and

c) Information concerning assembly of the heating element to the heater shall be provided in the installation instructions. See 60.2.3.

## 11 Protection Against Corrosion

11.1 Except as noted in 11.2, iron and steel parts shall be protected against corrosion by enameling, galvanizing, plating, or other equivalent means if the deterioration of such unprotected parts would be likely to result in risk of fire, electric shock, explosion, or personal injury.

11.2 In certain equipment where the oxidation of steel is not likely to be accelerated due to the exposure of metal to air and moisture or other oxidizing influence – thickness of metal and temperature also being factors – surfaces of sheet steel within an enclosure may not be required to be protected against corrosion. Cast-iron parts are not required to be protected against corrosion. A sheath employed on a

Documents
Document Sharing Hub
Full document details: UL 2021 2021

heating element operating in air and terminal parts attached directly to the heating element need not be protected against corrosion.

11.3 The aging characteristics of plating or other finish used in a heater shall be such that deterioration of the finish will not result in unacceptable performance of the heater.

11.4 The sheath of an immersion-type heating element shall be of a metal resistant to corrosion by the liquid in which the element is intended to be immersed.

## 12 Adjustment Stop

12.1 An adjustment stop of a control shall not be damaged so as to cause a reduction of spacings, erroneous indications of the control setpoint, or other conditions that may result in a risk of fire, electric shock, or injury to persons when tested in accordance with the Strength of Adjustment Stop Test, Section 54.

## 13 Supply Connections

### 13.1 Permanently connected appliances

13.1.1 Except as noted in 13.1.2 – 13.1.6, a heater intended for permanent connection to the power supply shall have provision for the connection of one of the wiring systems that, in accordance with the National Electrical Code, ANSI/NFPA 70 would be acceptable for the heater.

13.1.2 Provision for the connection of a wiring system (see 13.1.1) is not required for an air heater having a 50 pound mass (22.7 kg mass) or less and intended to be supported entirely by a ceiling outlet box that is not furnished with the heater, provided that:

a) The heater is marked (where the marking will be visible during the examination of the field-wiring connections) "This heater to be mounted to a standard outlet box," and

b) The temperature in the outlet box to which the heater will be mounted will not be higher than 60°C (140°F) under conditions of intended operation.

13.1.3 A wall-mounted heater intended to be supported entirely by a wall outlet box may also be accepted under the conditions mentioned in 13.1.2 if, in addition, it does not exert a bending moment greater than 200 pound-force-inches (22.6 N·m) on the outlet box to which it is mounted.

13.1.4 Leads (including a grounding conductor as specified by the National Electrical Code, ANSI/NFPA 70) provided for the power supply connection of a ceiling-panel or T-bar heater, may be brought out through factory-attached flexible conduit not less than 3 feet (0.91 m) long and not more than 11 feet (3.4 m) long. The leads shall extend at least 6 inches (152 mm) beyond the end of the flexible conduit. An outlet box need not be provided at the free end of the conduit.

*Exception: A grounding conductor is not required if:*

*a) The conduit is not longer than 6 feet (1.8 m),*

*b) No circuit conductor protected by an overcurrent protective device rated at more than 20 amperes is included and,*

*c) The conduit is no larger than 3/4 inch trade size, unless the fittings are identified as providing grounding.*

Documents
Document Sharing Hub
Full document details: UL 2021 2021

13.1.5 The location of a terminal box or compartment in which power-supply connections to a permanently connected heater are to be made shall be such that these connections may be inspected after the heater is installed as intended.

13.1.6 A terminal compartment intended for the connection of a supply raceway shall be so attached to the heater as to be prevented from turning with respect thereto.

13.1.7 Equipment intended for permanent connection to the power supply shall be provided with field-wiring terminals or leads (pigtail leads) for connection of the power-supply conductors.

13.1.8 Each such field wiring terminal or pigtail lead shall be acceptable for connection of a field conductor having an ampacity in accordance with the National Electrical Code, ANSI/NFPA 70, not less than 125 percent of the current rating of the equipment at the supply terminal or lead. If the rating is 24 amperes or less, the terminal or pigtail lead shall be rated for connection of a 10 AWG (5.3 $mm^2$) copper wire or a 8 AWG (8.4 $mm^2$) aluminum wire if the equipment is to be field-connected with aluminum conductors.

13.1.9 A pigtail lead shall be no more than two standard wire sizes smaller than the branch circuit power supply conductor (copper) to which it will be connected, and except as indicated in 13.1.10, shall not be smaller than 14 AWG (2.1 $mm^2$) copper.

13.1.10 A heater rated 16 amperes or less, that is not intended for connection of 10 AWG (5.3 $mm^2$) (copper) power-supply conductors, shall be for connection to a 15- or 20-ampere branch circuit, as appropriate for the rating of the equipment, and shall be marked in accordance with 59.36.

13.1.11 In determining the size of the power-supply conductors in a heater intended for connection to multiple power supplies and in which it is likely that more than three such conductors will occupy the same raceway, the ampacity derating factor given in the National Electrical Code, ANSI/NFPA 70, shall be applied.

13.1.12 For the purpose of these requirements, field-wiring terminals are considered to be the terminals to which power-supply, control, or equipment-grounding connections will be made in the field when the heater is installed. It is to be assumed that 60°C (140°F) wire will be used for connections to a heater rated at 80 amperes or less and that 75° C (167° F) wire will be used with a heater rated at more than 80 amperes.

13.1.13 A field-wiring terminal or lead for connection of an equipment-grounding conductor shall be provided. See 13.1.27.

13.1.14 A field wiring terminal intended solely for connection of an equipment-grounding conductor shall be capable of securing a conductor having a size determined by the rating of the branch circuit overcurrent device to which the equipment will be connected, in accordance with Table 250-95 of the National Electrical Code, ANSI/NFPA 70, except as indicated in 13.1.15.

13.1.15 A conductor smaller than that indicated in 13.1.14 may be used if the bonding connection does not open when carrying for 2 minutes twice the current equal to the rating of the branch circuit overcurrent device.

13.1.16 A field-wiring terminal shall be provided with a solder lug or with a pressure wire connector securely fastened in place (for example, firmly bolted or held by a screw), except that a wire-binding screw may be employed at a field-wiring terminal intended to accommodate a 10 AWG (5.3 $mm^2$) or smaller conductor if upturned lugs or the equivalent are provided to hold the wire in position.

Documents
Document Sharing Hub
Full document details: UL 2021 2021

13.1.17 A field-wiring terminal shall be prevented from turning or shifting in position by means other than friction between surfaces. This may be accomplished by two screws or rivets, by square shoulders or mortices, by a dowel pin, lug, or offset, by a connecting strap or clip fitted into an adjacent part, or by some other equivalent method.

*Exception: A solder lug is not acceptable for use as a grounding terminal.*

13.1.18 A wire-binding screw at a field-wiring terminal shall not be smaller than No. 10 (4.8 mm), except that a No. 8 (4.2 mm) screw may be used at a terminal intended only for the connection of a 14 AWG (2.1 $mm^2$) conductor, and a No. 6 (3.5 mm) screw may be used for the connection of a 16 AWG (1.3 $mm^2$) or 18 AWG (0.82 $mm^2$) control-circuit conductor.

13.1.19 It should be noted that according to the National Electrical Code, ANSI/NFPA 70, 14 AWG (2.1 $mm^2$) is the smallest conductor which may be used for branch-circuit wiring, and thus is the smallest conductor that may be anticipated at a terminal for the connection of a power-supply wire.

13.1.20 A terminal plate tapped for a wire-binding screw shall be of metal not less than 0.050 inch (1.27 mm) thick, except that a plate not less than 0.030 inch (0.76 mm) thick is acceptable if the tapped threads have the required mechanical strength. There shall be two or more full threads in the metal, which may be extruded if necessary to provide the threads.

13.1.21 Upturned lugs or a cupped washer shall be capable of retaining a conductor of the size mentioned either in 13.1.11 [but not smaller than 14 AWG (2.1 $mm^2$)] or in 13.1.14, whichever is applicable, under the head of the screw or the washer.

13.1.22 A wire-binding screw shall thread into metal.

13.1.23 A heater provided with field-wiring terminals or leads and intended to be connected to a grounded power-supply conductor shall have one terminal or lead identified for the connection of that conductor if necessary because of the requirement in 28.1, 28.4, 28.5, or 29.2.

13.1.24 A field-wiring terminal intended for the connection of a grounded conductor shall be of or be plated with a metal substantially white in color and shall be distinguishable from the other terminals, or proper identification of that terminal shall be clearly shown in some other manner, such as on an attached wiring diagram. A lead intended for the connection of a grounded conductor shall be finished to show a white or gray color and shall be distinguishable from the other leads.

13.1.25 The surface of an insulated lead intended solely for the connection of an equipment-grounding conductor shall be green with or without one or more yellow stripes, and no other lead shall be so identified.

13.1.26 The requirements in 13.1.24 and 13.1.25 relating to color coding of a lead for identification do not apply to internal wiring that is not visible in a wiring compartment in which field connections are to be made.

13.1.27 A wire-binding screw intended for the connection of an equipment-grounding conductor shall have a green-colored head that is hexagonal-shaped, slotted, or both. A pressure wire connector intended for connection of such a conductor shall be plainly identified, such as by being marked G, GR, GND, Ground, Grounding, by the symbol ⏚ or the like, or by a marking on a wiring diagram provided on the heater. The wire-binding screw or pressure wire connector shall be so located that it is unlikely to be removed during servicing of the heater and shall have upturned lugs or the equivalent to retain the conductor.

Documents
Document Sharing Hub
Full document details: UL 2021 2021

13.1.28 Except as noted in 13.1.29, the free length of a lead inside an outlet box or wiring compartment shall be 6 inches (152 mm) or more if the lead is intended for field connection to an external circuit.

13.1.29 The lead may be less than 6 inches (152 mm) in length if it is evident that the use of a longer lead may result in damage to the lead insulation.

13.1.30 A heater that is not strictly portable, but is not obviously intended to be permanently connected, may be acceptable if provided with a short length of flexible cord and an attachment plug for supply connection. The investigation of such a feature will include consideration of the utility of the heater and the necessity of having it readily detachable from its source of supply by means of the attachment plug.

13.1.31 A wall mounted heater weighing less than 50 pounds shall not be provided with a flexible cord and plug.

### 13.2 Cord-connected heaters

13.2.1 When tested in accordance with 13.2.2, a cord connected wall-mounted heater is acceptable if:

a) The security of the attachment of the heater to the wall is not impaired,

b) There is no evidence of risk of fire or electric shock,

c) The insulation resistance between live parts and dead metal parts is not less than 50,000 ohms, and

d) The heater withstands for 1 minute without breakdown the application of 60-hertz potential of 1000 volts between live parts and dead metal parts.

13.2.2 The heater is to be mounted in the intended manner and subjected to a static force of 300 pounds (1.33 kN) as indicated in Figure 13.1 and Figure 13.2. The force is to be applied through a nominal 2 by 4 inch (38 by 89 mm) wood member with the nominal 4-inch (89-mm) side horizontal.

Documents
Document Sharing Hub

Full document details: UL 2021 2021

**Figure 13.1**

**Fireplace type**

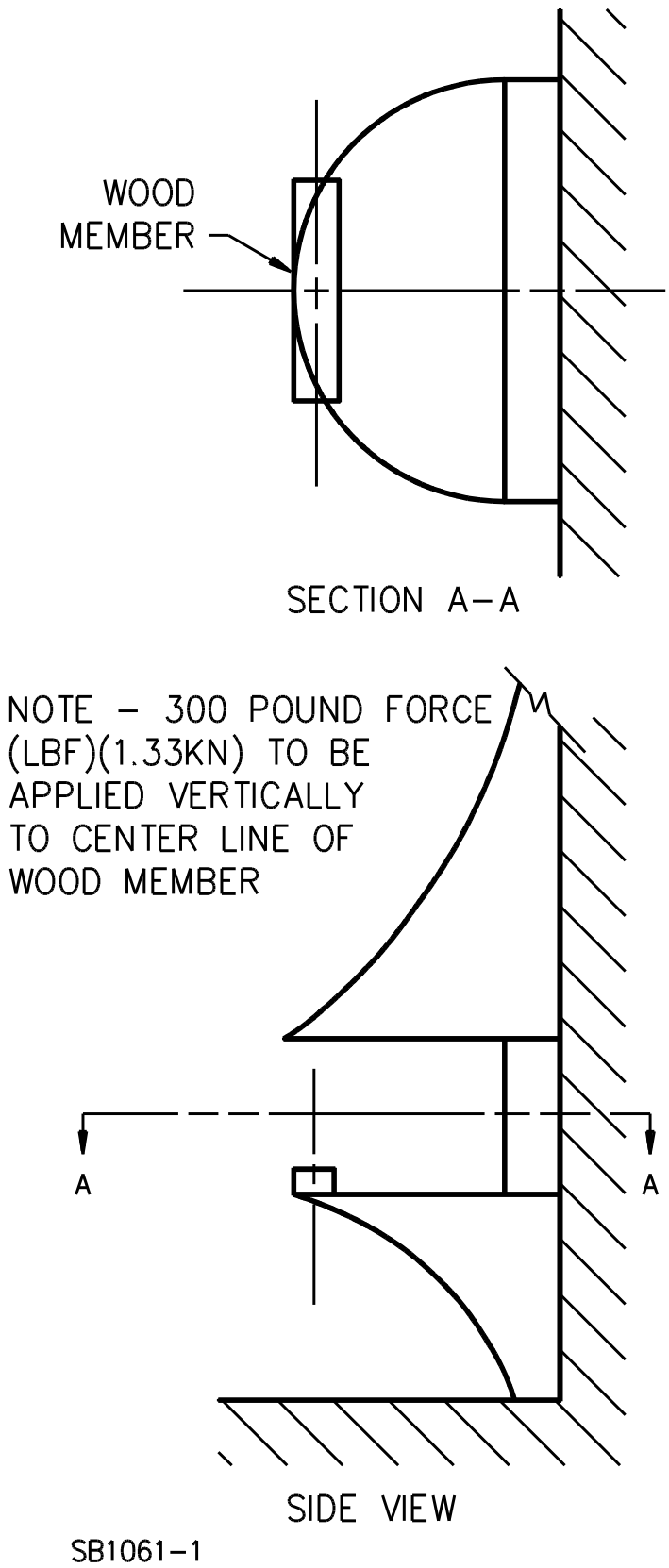


Documents
Document Sharing Hub
Full document details: UL 2021 2021