UL 2034

STANDARD FOR SAFETY

Single and Multiple Station Carbon Monoxide Alarms

This document is only permissible for use by Mohamed Waheed of Bechtel Global Corporation. 8/26/2023 6:21:46 PM

Documents
Document Sharing Hub

Full document details: UL 2034 2023

This document is only permissible for use by Mohamed Waheed of Bechtel Global Corporation. 8/26/2023 6:21:46 PM

Documents
Document Sharing Hub

ULSE INC. COPYRIGHTED MATERIAL – NOT AUTHORIZED FOR FURTHER REPRODUCTION OR DISTRIBUTION WITHOUT PERMISSION FROM ULSE INC.

Full document details: UL 2034 2023

UL Standard for Safety for Single and Multiple Station Carbon Monoxide Alarms, UL 2034

Fourth Edition, Dated March 31, 2017

Summary of Topics

This revision to ANSI/UL 2034 dated August 23, 2023 expands the scope to include non-dwelling units: 1.1

Text that has been changed in any manner or impacted by ULSE's electronic publishing system is marked with a vertical line in the margin.

The revised requirements are substantially in accordance with Proposal(s) on this subject dated February 17, 2023, April 7, 2023 and June 16, 2023.

All rights reserved. No part of this publication may be reproduced, stored in a retrieval system, or transmitted in any form by any means, electronic, mechanical photocopying, recording, or otherwise without prior permission of ULSE Inc. (ULSE).

ULSE provides this Standard "as is" without warranty of any kind, either expressed or implied, including but not limited to, the implied warranties of merchantability or fitness for any purpose.

In no event will ULSE be liable for any special, incidental, consequential, indirect or similar damages, including loss of profits, lost savings, loss of data, or any other damages arising out of the use of or the inability to use this Standard, even if ULSE or an authorized ULSE representative has been advised of the possibility of such damage. In no event shall ULSE's liability for any damage ever exceed the price paid for this Standard, regardless of the form of the claim.

Users of the electronic versions of UL's Standards for Safety agree to defend, indemnify, and hold ULSE harmless from and against any loss, expense, liability, damage, claim, or judgment (including reasonable attorney's fees) resulting from any error or deviation introduced while purchaser is storing an electronic Standard on the purchaser's computer system.

This document is only permissible for use by Mohamed Waheed of Bechtel Global Corporation. 8/26/2023 6:21:46 PM

Documents
Document Sharing Hub

ULSE INC. COPYRIGHTED MATERIAL – NOT AUTHORIZED FOR FURTHER REPRODUCTION OR DISTRIBUTION WITHOUT PERMISSION FROM ULSE INC.

Full document details: UL 2034 2023

No Text on This Page

This document is only permissible for use by Mohamed Waheed of Bechtel Global Corporation. 8/26/2023 6:21:46 PM

Documents
Document Sharing Hub
ULSE INC. COPYRIGHTED MATERIAL – NOT AUTHORIZED FOR FURTHER REPRODUCTION OR DISTRIBUTION WITHOUT PERMISSION FROM ULSE INC.
Full document details: UL 2034 2023

MARCH 31, 2017
(Title Page Reprinted: August 23, 2023)

ANSI/UL 2034-2023

UL 2034

Standard for Single and Multiple Station Carbon Monoxide Alarms

First Edition – April, 1992
Second Edition – October, 1996
Third Edition – February, 2008

Fourth Edition

March 31, 2017

This ANSI/UL Standard for Safety consists of the Fourth Edition including revisions through August 23, 2023.

The most recent designation of ANSI/UL 2034 as an American National Standard (ANSI) occurred on August 23, 2023. ANSI approval for a standard does not include the Cover Page, Transmittal Pages, and Title Page. Any other portions of this ANSI/UL standard that were not processed in accordance with ANSI/UL requirements are noted at the beginning of the impacted sections.

Comments or proposals for revisions on any part of the Standard may be submitted to ULSE at any time. Proposals should be submitted via a Proposal Request in ULSE's Collaborative Standards Development System (CSDS) at https://csds.ul.com.

Our Standards for Safety are copyrighted by ULSE Inc. Neither a printed nor electronic copy of a Standard should be altered in any way. All of our Standards and all copyrights, ownerships, and rights regarding those Standards shall remain the sole and exclusive property of ULSE Inc.

COPYRIGHT © 2023 ULSE INC.

This document is only permissible for use by Mohamed Waheed of Bechtel Global Corporation. 8/26/2023 6:21:46 PM

ULSE INC. COPYRIGHTED MATERIAL – NOT AUTHORIZED FOR FURTHER REPRODUCTION OR DISTRIBUTION WITHOUT PERMISSION FROM ULSE INC.

Documents
Document Sharing Hub

Full document details: UL 2034 2023

No Text on This Page

This document is only permissible for use by Mohamed Waheed of Bechtel Global Corporation. 8/26/2023 6:21:46 PM

Documents
Document Sharing Hub
ULSE INC. COPYRIGHTED MATERIAL – NOT AUTHORIZED FOR FURTHER REPRODUCTION OR DISTRIBUTION WITHOUT PERMISSION FROM ULSE INC.
Full document details: UL 2034 2023

CONTENTS

INTRODUCTION

1 Scope 11
2 Components 11
3 Units of Measurement 12
4 Undated References 12
5 Glossary 12
6 Alarm Reliability Prediction 14
7 Battery Removal Indicator 15
8 Alarm Reset/Silence Feature 16
9 Voltage Classification 17
10 Lifetime 17

CONSTRUCTION

11 General 17
11.1 Accessories 17
11.2 Sensitivity adjustment 18
11.3 Supplementary signaling feature 18
12 Service and Maintenance Protection 18
12.1 General 18
12.2 Sharp edges 18
13 Enclosure 18
13.1 General 18
13.2 Cast metal enclosures 20
13.3 Sheet metal enclosures 20
13.4 Nonmetallic enclosures 21
13.5 Ventilating openings 21
13.6 Covers 22
13.7 Transparent panels 22
14 Corrosion Protection 23

POWER SUPPLY

15 Primary Power Supply 23
16 Secondary Power Supply (Not Applicable for Commercial Vehicles) 24
17 Batteries 24
17.1 General 24
17.2 Battery connections 25
18 Supplementary Signaling Circuits 25

FIELD WIRING

19 Permanent Connection 25
19.1 General 25
19.2 Field-wiring compartment for hazardous voltage connection 25
19.3 Field-wiring terminals 26
19.4 Field-wiring leads 26
19.5 Grounded supply terminals and leads 26
20 Power Supply Cord 27
21 Equipment Grounding 28
21.1 General 28

This document is only permissible for use by Mohamed Waheed of Bechtel Global Corporation. 8/26/2023 6:21:46 PM

Documents
Document Sharing Hub

ULSE INC. COPYRIGHTED MATERIAL – NOT AUTHORIZED FOR FURTHER REPRODUCTION OR DISTRIBUTION WITHOUT PERMISSION FROM ULSE INC.

Full document details: UL 2034 2023

21.2 Permanently-connected units 28
21.3 Cord-connected units 28
22 Remote Power Supply Leads 28

INTERNAL WIRING

23 General 29
24 Wireways 29
25 Splices 29
26 Barriers 30
27 Grounding and Bonding 30

ELECTRICAL COMPONENTS

28 General 31
28.1 Mounting of components 31
28.2 Operating components 31
28.3 Current-carrying parts 32
28.4 Electrical insulating material 32
29 Bushings 32
30 Lampholders and Lamps 33
31 Protective Devices 33
32 Printed-Wiring Boards 33
33 Switches 33
34 Transformers and Coils 33
35 Dropping Resistors 34
36 Spacings 34

PERFORMANCE

37 General 35
37.1 Test units and data 35
37.2 Accessories 36
37.3 Test voltages 37
37.4 Component reliability data 37
38 Normal Operation Test 38
39 Circuit Measurement Test 39
39.1 Current input 39
39.2 Battery trouble voltage determination 39
39.3 Battery trouble silence 41
40 Electrical Supervision Test 41
40.1 General 41
40.2 AC powered units 43
40.3 Battery powered primary or secondary units 43
40.4 Component failure 44
40.5 External wiring 44
41 Sensitivity Test 44
41.1 General 44
41.2 Test equipment 46
41.3 Test method 46
41.4 Uniformity of operation 47
42 Selectivity Test 47
43 Sensitivity Test Feature 48
44 Stability Tests 49
44A One Year (minimum) Sensor Stability Test for CO Sensors 50

This document is only permissible for use by Mohamed Waheed of Bechtel Global Corporation. 8/26/2023 6:21:46 PM

Documents
Document Sharing Hub

ULSE INC. COPYRIGHTED MATERIAL – NOT AUTHORIZED FOR FURTHER REPRODUCTION OR DISTRIBUTION WITHOUT PERMISSION FROM ULSE INC.

Full document details: UL 2034 2023

44A.1 General 50
44A.2 Test gas 51
44A.3 Sensor data collection 52
44A.4 CO sensor sensitivity test 53
44B Velocity-Sensitivity Test 53
44B.1 Test procedure 53
44B.2 Duct test equipment 54
44B.3 Effect of air velocity – Commercial vehicles 55
45 Temperature Test 55
46 Overload Test 58
46.1 Alarm 58
46.2 Separately energized circuits 58
47 Endurance Test 59
47.1 Alarm 59
47.2 Separately energized circuits 59
47.3 Audible signaling appliance 59
47.4 Test means 59
48 Variable Ambient Temperature Test 60
48.1 Operation in high and low ambient 60
48.2 Effect of shipping and storage 60
49 Humidity Test 60
49.1 High humidity (non-condensing) 60
49.2 Low humidity 61
49.3 Sensitivity measurements 61
50 Leakage Current Test 61
51 Transient Tests 63
51.1 General 63
51.2 Supply line (ring wave surge voltage) transients 63
51.3 Internally induced transients 63
51.4 Extraneous transients 63
51.5 Supply line (extra-low-voltage) circuit transients 64
52 Surge Immunity Test (Combination Wave) 65
53 Surge Current Test 65
54 Dielectric Voltage-Withstand Test 66
55 Abnormal Operation Test 66
56 Overvoltage Test 67
57 Undervoltage Test 67
58 Dust Test 67
59 Static Discharge Test 68
60 Vibration Test 68
61 Replacement Test, Head and Cover 69
62 Jarring Test 69
63 Corrosion Test 70
64 Battery Tests 71
65 Audibility Test 71
65.1 General 71
65.2 Sound output measurement 72
65.3 Alarm duration test 72
65.4 Supplementary remote sounding appliances 73
66 Tests of Thermoplastic Materials 73
66.1 General 73
66.2 Accelerated air-oven aging test 73
66.3 Flame test (3/4 inch) 73
66.4 Flame test (5 inch) 74
66.5 Impact test 75
67 Paint Loading Test 76

This document is only permissible for use by Mohamed Waheed of Bechtel Global Corporation. 8/26/2023 6:21:46 PM

Documents
Document Sharing Hub

ULSE INC. COPYRIGHTED MATERIAL – NOT AUTHORIZED FOR FURTHER REPRODUCTION OR DISTRIBUTION WITHOUT PERMISSION FROM ULSE INC.

Full document details: UL 2034 2023

68 Battery Replacement Test 76
69 Polarity Reversal Test 76
70 Electric Shock Current Test 77
71 Strain Relief Test 82
71.1 General 82
71.2 Power-supply cord 82
71.3 Field-wiring leads 82
71.4 Special connector 82
72 Power Supply Tests 82
72.1 General 82
72.2 Volt-amperes capacity 82
72.3 Burnout test 83
73 Drop Test 83

CARBON MONOXIDE ALARMS FOR USE IN RECREATIONAL VEHICLES, COMMERCIAL VEHICLES, AND UNCONDITIONED AREAS

74 General 83
74.2 Marking 83
75 Variable Ambient Temperature and Humidity Test 84
76 Corrosion (Salt Spray) Test 85
77 Vibration Test 85
78 Contamination Test (Cooking By-Products) 85
79 Carbon Monoxide Alarms for Use on Recreational Boats 87
79.1 General 87
79.2 Operation tests following conditioning 88
79.3 Watertightness test 89
79.4 Drip test 90
79.5 Abnormal operation tests 90
79.6 Salt-spray corrosion test 91
79.7 Marking 91
79.8 Operating and installation instructions 91

MANUFACTURING AND PRODUCTION TESTS

80 General 92
81 Sensitivity Calibration Tests 93
82 Measurement of In-Service Reliability 93
82.1 Required in-service reliability 93
82.2 Sample frequency and sample size 93
82.3 Test results and record keeping 94
83 Production Line Dielectric Voltage-Withstand Tests 94
84 Production Line Grounding Continuity Tests 95
85 Audibility Test 95
86 Alarm Shipment 95

MARKING

87 General 95

INSTRUCTIONS

88 General 98
89 Installation and Operating Instructions for Evaluation 101

This document is only permissible for use by Mohamed Waheed of Bechtel Global Corporation. 8/26/2023 6:21:46 PM

Documents
Document Sharing Hub

ULSE INC. COPYRIGHTED MATERIAL – NOT AUTHORIZED FOR FURTHER REPRODUCTION OR DISTRIBUTION WITHOUT PERMISSION FROM ULSE INC.

Full document details: UL 2034 2023

SUPPLEMENT SA – RELIABILITY AND FAILURE RATE DETERMINATION INFORMATION

GENERAL

SA1 Instructions for Determining a Reliability Prediction for Carbon Monoxide Alarms 103
SA2 Methods of Determining Failure Rate 103
SA3 Maximum Alarm Failure Rates 112

CRITERIA FOR ACCEPTANCE OF MICROELECTRONIC DEVICES

SA4 General 112
SA5 Quality Assurance Screening Program 113
SA6 Determination of Failure Rate Number Supplemented by Burn-In Test 114
SA6.1 General 114
SA6.2 Determination sequence 114
SA6.3 Test calculations and procedures 117
SA6.4 Test conditions 117
SA6.5 Failure rate number calculation 117

SUPPLEMENT SB – MANUFACTURING AND PRODUCTION TESTS

Glossary 121

UL REPRESENTATIVE'S DUTIES

General 121
Instructions for Inspection of Test Equipment 122
Operation check 122
Sensitivity test 122
Instructions for Inspection of the Product 123
General instructions 123
Instructions to the UL Representative for Sample Pick-Up 124
UL representative 124

INSTRUCTIONS FOR FOLLOW-UP TESTS AT UL

Engineering services department 124
Carbon Monoxide Sensitivity Test 124
Method 124
Results 125

INSTRUCTIONS FOR TESTS AND/OR INSPECTION AT THE FACTORY

Manufacturer's Responsibilities 125
Requirements for Factory Tests 125
General 125
Production Line Dielectric Voltage Withstand Test 126
General 126
Method 126
Test equipment 126
Basis for acceptability 126
Production Line Dielectric Voltage-Withstand Test Equipment 126
Production Line Grounding Continuity Test 127

This document is only permissible for use by Mohamed Waheed of Bechtel Global Corporation. 8/26/2023 6:21:46 PM

Documents
Document Sharing Hub

ULSE INC. COPYRIGHTED MATERIAL – NOT AUTHORIZED FOR FURTHER REPRODUCTION OR DISTRIBUTION WITHOUT PERMISSION FROM ULSE INC.

Full document details: UL 2034 2023

General 127
Test equipment 127
Method 127
Basis for acceptability 127
Electrical Function and Calibration 127
General 127
Test equipment 127
Method 127
Basis for acceptability 128
Electrical function and calibration 128
Production Line Sensitivity Calibration Test (Quarterly) 128
General 128
Test equipment 128
Method 128
Sensitivity calibration test 129
Production Line Sensitivity Calibration Test (Per Shift) 129
General 129
Test equipment 129
Method 129
Basis for acceptability 129
Sensitivity calibration test (per shift) 129

APPENDIX A

Standards for Components 131

APPENDIX B – MARKING

B1 Class I Integral Marking 132
B2 Class IIA-1 Permanent Plate 132
B3 Class IIA-2 Permanent Plate 132
B4 Class IIA-3 Permanent Plate 132
B5 Class IIA-4 Permanent Plate 132
B6 Class IIIA-1 Permanent Plate 132
B7 Class IIIA-2 Permanent Plate 132
B8 Class IIIB Waterproof Marking 133
B9 Class IIIC Waterproof Label 133
B10 Class IV Semipermanent Label 133
B11 Class V Printed Marking 133

APPENDIX C – MARKING MATERIAL ADHESION

Method of Test 134

Appendix D – Sample Size Determination for In Service Reliability Testing

D1 General 135
D2 Procedure 142
D3 Statistical Derivation of Table D2 143

APPENDIX E

E1 UL Representative's Responsibilities and Instructions for Examination of the Product 147
E1.1 UL representatives responsibilities 147
E1.2 Procedure in the event of nonconformance 147

This document is only permissible for use by Mohamed Waheed of Bechtel Global Corporation. 8/26/2023 6:21:46 PM

Documents
Document Sharing Hub

ULSE INC. COPYRIGHTED MATERIAL – NOT AUTHORIZED FOR FURTHER REPRODUCTION OR DISTRIBUTION WITHOUT PERMISSION FROM ULSE INC.

Full document details: UL 2034 2023

E1.3 Construction Considerations 148
E1.4 Glossary 149
E1.5 Instructions for Inspection of Test Equipment 149
E2 Instructions to UL Representative – Sample Selection 150
E3 Instructions for Follow-Up Tests at UL 151
E3.1 Carbon monoxide sensitivity test 151
E3.2 Carbon monoxide audibility test 151
E4 Manufacturer's Responsibilities and Requirements for Factory Tests 151
E4.1 Manufacturer's responsibilities 151
E4.2 Requirements for factory tests 152
E5 Annual market Survey of Carbon Monozide Alarms 155

This document is only permissible for use by Mohamed Waheed of Bechtel Global Corporation. 8/26/2023 6:21:46 PM

Documents
Document Sharing Hub

ULSE INC. COPYRIGHTED MATERIAL – NOT AUTHORIZED FOR FURTHER REPRODUCTION OR DISTRIBUTION WITHOUT PERMISSION FROM ULSE INC.

Full document details: UL 2034 2023

No Text on This Page

This document is only permissible for use by Mohamed Waheed of Bechtel Global Corporation. 8/26/2023 6:21:46 PM

Documents
Document Sharing Hub
ULSE INC. COPYRIGHTED MATERIAL – NOT AUTHORIZED FOR FURTHER REPRODUCTION OR DISTRIBUTION WITHOUT PERMISSION FROM ULSE INC.
Full document details: UL 2034 2023

INTRODUCTION

1 Scope

1.1 These requirements cover electrically operated single and multiple station carbon monoxide (CO) alarms intended for protection in ordinary indoor locations and unconditioned areas, per applicable governing laws, codes, and standards. This includes, but is not limited to, recreational vehicles, mobile homes, commercial vehicles, and recreational boats with enclosed accommodation spaces and cockpit areas.

1.2 Carbon monoxide alarms covered by these requirements are intended to respond to the presence of carbon monoxide from sources such as, but not limited to, exhaust from internal-combustion engines, abnormal operation of fuel-fired appliances, and fireplaces. Carbon monoxide alarms are intended to alarm at carbon monoxide levels below those that cause a loss of ability to react to the dangers of carbon monoxide exposure. See Table 41.1, Part A, Alarm – carbon monoxide concentration and response time.

1.3 Carbon monoxide alarms covered by this standard are not intended to alarm when exposed to long-term, low-level carbon monoxide exposures or slightly higher short-term transient carbon monoxide exposures, possibly caused by air pollution and/or properly installed/maintained fuel-fired appliances and fireplaces. See Table 41.1, Part B, False alarm resistance specifications.

1.4 These requirements, where applicable, also cover all remote accessories that may be connected to or are intended to be employed with a single or multiple station carbon monoxide alarm. See 37.2.1.

1.5 This standard does not cover the following:

a) Single and multiple station smoke alarms that are covered by the Standard for Smoke Alarms, UL 217, or the Standard for Smoke Alarms, ULC-S531.

b) Smoke alarms of the nonself-contained type that are intended for connection to a household or industrial system control unit. These are included in the Standard for Smoke Detectors for Fire Alarm Systems, UL 268, or the Standard for Smoke Detectors, Fire Alarm, ULC-S529.

c) Mechanically operated single and multiple station fire alarm devices that are specified in the Standard for Single and Multiple Station Heat Alarms, UL 539, or the Standard for Heat Actuated Fire Detectors, Fire Alarm, ULC-S530.

d) Heat alarms whose requirements are covered in the Standard for Heat Detectors for Fire Protective Signaling Systems, UL 521, or the Standard for Lined Building Protection Fire Hose, ULC-530.

e) Carbon monoxide gas detectors intended for use in hazardous locations as defined in the U.S. Coast Guard Electrical Engineering Regulations.

2 Components

2.1 Except as indicated in 2.2, a component of a product covered by this standard shall comply with the requirements for that component. See Appendix A for a list of standards covering components generally used in the products covered by this standard.

2.2 A component is not required to comply with a specific requirement that:

a) Involves a feature or characteristic not required in the application of the component in the product covered by this standard, or

This document is only permissible for use by Mohamed Waheed of Bechtel Global Corporation. 8/26/2023 6:21:46 PM

Documents
Document Sharing Hub

ULSE INC. COPYRIGHTED MATERIAL – NOT AUTHORIZED FOR FURTHER REPRODUCTION OR DISTRIBUTION WITHOUT PERMISSION FROM ULSE INC.

Full document details: UL 2034 2023

b) Is superseded by a requirement in this standard.

2.3 A component shall be used in accordance with its rating established for the intended conditions of use.

2.4 Specific components are incomplete in construction features or restricted in performance capabilities. Such components are intended for use only under limited conditions, such as certain temperatures not exceeding specified limits, and shall be used only under those specific conditions.

3 Units of Measurement

3.1 Values stated without parentheses are the requirement. Values in parentheses are explanatory or approximate information.

4 Undated References

4.1 Any undated reference to a code or standard appearing in the requirements of this standard shall be interpreted as referring to the latest edition of that code or standard.

5 Glossary

5.1 For the purpose of this standard the following definitions apply.

5.2 ALARM, MULTIPLE STATION – A single station alarm that is able to be interconnected with one or more other alarms for common alarm annunciation.

5.3 ALARM SIGNAL – An audible and visual signal intended to indicate a gas concentration in excess of 30 ppm carbon monoxide for thirty days or 70 ppm carbon monoxide for 1 hour. The audible portion of the alarm signal shall be 4 cycles of 100 milliseconds "on"/100 milliseconds "off," then 5 seconds "off." After the initial 4 minutes of the alarm signal, the 5 second "off" period may be changed to 60 seconds±10 percent. This signal shall be repeated until the alarm resets after dissipation of CO or the alarm signal is manually silenced. The visual indicator for alarm shall be located on the face of the unit.

5.4 ALARM, SINGLE STATION – An alarm device consisting of an assembly of electrical and mechanical components including a sensor or sensors, an audible alarm, and an optional visual alarm constructed to detect the presence of carbon monoxide gas. It is powered either from an external source by means of splice leads or a cord and plug arrangement or from an integral battery or batteries. Some devices have terminals for connection to remote audible signaling appliances or accessories. Some also contain an integral transmitter for energizing a remote audible signaling appliance.

5.5 BATTERY TROUBLE LEVEL SIGNAL – Any combination of battery voltage and series resistance that results in an audible trouble signal from a battery-operated alarm.

5.6 CARBON MONOXIDE (CO) – A colorless, odorless, toxic gas.

5.7 CARBOXYHEMOGLOBIN OR CARBONMONOXYHEMOGLOBIN (COHb) – A stable combination of carbon monoxide and hemoglobin formed in the blood when carbon monoxide is inhaled. Percent carboxyhemoglobin indicates the degree to which the oxygen-carrying capacity of the blood is impeded by the uptake of carbon monoxide by the hemoglobin.

5.7A COMMERCIAL VEHICLES – US GVWR (Gross Vehicle Weight Rating) Class 6 – 8 as defined by the United States Code (U.S.C.) Title 49 – Transportation Subtitle VI – Motor Vehicle And Driver Programs, Part B – Commercial.

This document is only permissible for use by Mohamed Waheed of Bechtel Global Corporation. 8/26/2023 6:21:46 PM

Documents
Document Sharing Hub

ULSE INC. COPYRIGHTED MATERIAL – NOT AUTHORIZED FOR FURTHER REPRODUCTION OR DISTRIBUTION WITHOUT PERMISSION FROM ULSE INC.

Full document details: UL 2034 2023

5.8 COMPONENT, LIMITED LIFE – A component that provides a minimum of one year of service but is expected to periodically fail and be replaced and that is supervised for failure that affects normal operation or sensitivity. Typical examples of such components include incandescent lamps, electronic tube heaters, functional heating elements, and batteries. See also 40.4.1.

5.9 COMPONENT, RELIABLE – A component that is not expected to fail or be periodically replaced and is not supervised. A reliable component shall have a predicted failure rated of 2.5 or less failures per million hours.

5.10 DRIP-PROOF – A product that is constructed, or so protected, so that falling drops of liquid or solid particle striking the enclosure, from 0 – 15 degrees downward from the vertical, do not interfere with the intended operation of the equipment.

5.11 DWELLING UNIT – That structure, area, room, or combination of rooms in which a family (or individual) lives. This is intended to cover the living area only and not common usage areas in multifamily buildings such as corridors, lobbies, and basements.

5.12 END-OF-LIFE SIGNAL – An audible signal, differing from the alarm signal, intended to indicate that the device has reached the end of its useful life and should be replaced.

5.13 LONG-TERM, LOW-LEVEL CARBON MONOXIDE EXPOSURES – Situations resulting in a carbon monoxide concentration not exceeding 30 ppm for less than 30 days.

5.14 PPM – Gas concentration in parts per million.

5.15 PRE-ALARM – An optional audible or audible-visual signal above 30 ppm of CO, unique from the trouble and alarm signal, intended to provide an early notification of the detection of carbon monoxide prior to an alarm signal. When the pre-alarm signal occurs, the carbon monoxide alarm emits the unique pre-alarm signal at the indicating carbon monoxide alarm and may also send the pre-alarm signal to a wireless communication remote accessory device. The pre-alarm signal is an optional signal that when implemented does not prohibit the normal operation of the carbon monoxide alarm. When rapid levels of carbon monoxide are detected, the alarm signal takes precedence over the pre-alarm signal.

5.16 QUALIFIED APPLIANCE TECHNICIAN – A person, firm, corporation, or company that either in person, or through a representative, is engaged in and responsible for the installation, testing, servicing, or replacement of heating, ventilation, and air-conditioning (HVAC) equipment, combustion appliances and equipment, and/or gas fireplaces or other decorative combustion equipment.

5.17 SELF-CONTAINED UNIT – An alarm containing an internal battery or batteries.

5.18 SENSITIVITY – The gas concentration versus time at or above which the alarm must initiate or remain in alarm.

5.19 SENSOR – The component or combination of components of the alarm that responds to and in turn provides a usable output signal in the presence of carbon monoxide.

5.20 SHORT-TERM CARBON MONOXIDE EXPOSURE – Situations resulting in a carbon monoxide concentration not exceeding 70 ppm for less than 60 minutes.

5.21 SPECIFIED LIFETIME – A continuous period of time specified by the manufacturer, during which the alarm meets the requirements of this standard. The manufacturer will specify the start date of the period as either the date of manufacturer of the fully assembled unit in its final enclosure, or the date the unit is placed into service.

This document is only permissible for use by Mohamed Waheed of Bechtel Global Corporation. 8/26/2023 6:21:46 PM

Documents
Document Sharing Hub

ULSE INC. COPYRIGHTED MATERIAL – NOT AUTHORIZED FOR FURTHER REPRODUCTION OR DISTRIBUTION WITHOUT PERMISSION FROM ULSE INC.

Full document details: UL 2034 2023

5.22 SWITCHING DEVICE – A device designed to close and/or open one or more electrical circuits.

5.23 TROUBLE SIGNAL – A visual or audible signal, differing from the alarm signal, intended to indicate a fault or trouble condition, such as an open or shorted condition of a component in the device, an open or ground in the connecting wiring, loss of AC power, or the need for replacement of a limited life component. In a product that includes more than one limited life component, other than the battery, the trouble signal shall be identified by both an audible and visual signal. The audible portion of the trouble signal shall be a single tone pattern consisting of a short "beep" of not more than 0.5 second repeating once every 30 – 60 seconds ±10 percent. This signal shall be repeated until the trouble condition is corrected.

5.24 UNCONDITIONED AREAS – Enclosed spaces without continuous climate controls where an individual spends time and where there is a potential for carbon monoxide buildup. (Examples of unconditioned areas that may include combustible fuel appliances and/or fireplaces include attached and detached garages, crawl spaces, attics, cottages, cabins, etc.)

5.25 WARNING SIGNAL – Except for alarm and trouble signals, no other audible and visual signals shall be used (i.e. warning signals that indicate the presence of CO less than 30 ppm).

5.26 WATERTIGHT – A product that is constructed to prevent water from entering the enclosure under any condition other than submersion.

6 Alarm Reliability Prediction

6.1 Alarm units shall be constructed to a maximum failure rate of 4.0 failures per million hours as calculated by a full part stress analysis prediction as described in Section 2.0 of the Military Standard 217F or 3.5 failures per million hours as calculated by a simplified parts count reliability prediction as described in Section 3.0 of the Military Standard 217B, or equivalent. A "Ground Fixed" (GF) environment is to be used for all calculations. If actual equivalent data is available from the manufacturer, it is usable in lieu of the projected data for the purpose of determining acceptable reliability.

6.2 Any component whose failure results in any of the following is not required to be included in the failure rate calculations:

a) Energization of either an audible trouble signal or energization of a separate visual indication (orange or yellow),

b) De-energization of a power-on light,

c) Does not affect the normal operation, or

d) Is evaluated by specific performance tests included in this standard. Examples include the sensor, audible signal appliance, test switch, and battery contacts.

6.3 An integral or remote accessory, such as an integral transmitter or remote sounding appliance, is not required to be included in the reliability prediction except for those components whose failure affects the normal operation of the alarm.

6.4 A custom integrated circuit (CHIP) employed in an alarm shall have a predicted failure rate of not greater than 2.5 failures per million hours. The failure rate is to be determined through an evaluation of data in a 3000-hour burn-in test, or equivalent. (See Supplement SA for information on evaluation methods.)

6.5 The carbon monoxide sensor, or a sensing component supervision system, of a CO alarming device shall be either be reliable as required by 6.6 or supervised as required by 6.7.

This document is only permissible for use by Mohamed Waheed of Bechtel Global Corporation. 8/26/2023 6:21:46 PM

Documents
Document Sharing Hub

ULSE INC. COPYRIGHTED MATERIAL – NOT AUTHORIZED FOR FURTHER REPRODUCTION OR DISTRIBUTION WITHOUT PERMISSION FROM ULSE INC.

Full document details: UL 2034 2023

6.6 If the CO sensor is to be considered reliable, reliability data shall be developed using the Military Standardization Handbook, MIL.217-F or equivalent. The data must indicate a failure rate of not more than 2.5 failures per million hours of operation.

6.7 If the CO sensor is to be considered supervised, failure modes with a likelihood of more than 2.5 failures per million hours of operation, including, but not limited to shorts, opens, and uncompensated sensitivity drift outside of the limits of Table 41.1, must result in a trouble signal as required in Section 40.

6.8 Documentation of the sensor failure modes shall be provided.

6.9 Documentation of the failure modes shall include a description of each failure mode and the circumstances under which it may occur.

6.10 The manufacturer shall submit a test method to render the CO sensor unresponsive to the CO concentrations given in Table 41.1 if the documentation submitted for the sensor or the sensing components indicates drift in the less sensitive direction. This method shall be used when conducting the Electrical Supervision Test, Section 40.

7 Battery Removal Indicator

7.1 Removal of a battery from a battery-operated carbon monoxide alarm shall result in a readily apparent and prominent visual indication. The visual indication shall consist of:

a) A warning flag that will be exposed with the battery removed and the cover closed,

b) A hinged cover that cannot be closed with the battery removed,

c) A swing-out or pull-out battery compartment that is resistant to being closed unless it has a battery in place,

d) An audible or audible and tactile trouble signal on an AC powered carbon monoxide alarm with battery back-up,

e) An arrangement to render the unit resistant to reinstallation, or

f) A local audible, local audible and tactile, or local visual indication at the control panel.

7.2 Deactivation of the battery of a carbon monoxide alarm that uses a non-replaceable battery shall result in a readily apparent and prominent indication. The indication shall consist of one of the following:

a) A warning flag that will be exposed with the battery removed and the cover closed;

b) A hinged cover that cannot be closed with the battery removed;

c) A swing-out or pull-out battery compartment that is resistant to being closed unless it has a battery in place;

d) An audible or audible and tactile trouble signal on an AC powered carbon monoxide alarm with battery back-up;

e) An arrangement to render the unit resistant to reinstallation; or

f) A local audible, local audible and tactile, or local visual indication at the control panel.

7.3 If a warning flag, or equivalent, is employed to comply with the requirement of 7.1 or 7.2, it shall be marked as required in 87.6.

This document is only permissible for use by Mohamed Waheed of Bechtel Global Corporation. 8/26/2023 6:21:46 PM

Documents
Document Sharing Hub

ULSE INC. COPYRIGHTED MATERIAL – NOT AUTHORIZED FOR FURTHER REPRODUCTION OR DISTRIBUTION WITHOUT PERMISSION FROM ULSE INC.

Full document details: UL 2034 2023

8 Alarm Reset/Silence Feature

8.1 Each single and multiple station carbon monoxide alarm shall be designed to be reset/silenced through a manual operation (on the alarm) by physically depressing the alarm reset/silence feature. The operation of the reset/silence feature shall silence the alarm signal and restore the alarm to its normal condition resulting in the alarm once again being able to sense carbon monoxide and alarm within the limits of the Sensitivity Test, Section 41. The alarm signal shall be reenergized within 6 minutes from the time the reset button is operated if the concentration of carbon monoxide surrounding the alarm remains at 70 ppm or greater.

8.2 When single station carbon monoxide alarms are configured in a multiple station connection (interconnection of two or more carbon monoxide alarms), the carbon monoxide alarm that initiates an alarm signal shall be designed to be reset/silenced through a manual operation by physically depressing the alarm reset/silence feature on the initiating alarm.

8.3 As an optional feature, the manufacturer is permitted to include an additional wireless communication remote reset/silencing feature. If included, and tested for compliance with the requirements outlined in 8.6, the wireless communication remote reset/silence feature may be activated through a remote device. The wireless communication feature shall be capable of providing additional instructions for the user to confirm his physical proximity to the initiating carbon monoxide alarm before resetting/silencing the alarm signal using the remote device.

8.4 A multiple-station interconnected carbon monoxide alarm that produces an alarm signal (wired, wireless, relay, audible and audible-visual) shall be permitted to be reset/silenced by any of the following:

a) By activating the alarm reset/silence feature on any multiple station interconnected carbon monoxide alarm, provided the carbon monoxide alarm that initiated the alarm signal remains in alarm; or

b) By physically depressing the alarm reset/silence feature on the initiating carbon monoxide alarm(s), as noted in 8.1; or

c) By activating the wireless communication remote reset/silencing feature using a remote device.

8.5 Upon activation of an alarm signal from a carbon monoxide alarm in the multiple-station circuit, or reactivation of the alarm signal from the originating carbon monoxide alarm, all alarms in the multiple-station interconnect shall re-initiate their alarm signal.

8.6 Carbon monoxide alarms with a wireless communication remote device and employing a remote alarm reset/silence feature shall be tested in accordance with one of the following requirements:

a) The remote transmission radio of the carbon monoxide alarm shall comply with FCC Part 15.249 and the following frequency and field strength requirements:

1) Frequency range

i) 2.4 GHz (2.4 GHz – 2.4835 GHz)

ii) 900 MHz (902 – 928 MHz)

iii) 5.8 GHz (5725 – 5875 MHz)

2) Field strength

i) 94 dBuV/m @ 3m

or

This document is only permissible for use by Mohamed Waheed of Bechtel Global Corporation. 8/26/2023 6:21:46 PM

Documents
Document Sharing Hub

ULSE INC. COPYRIGHTED MATERIAL – NOT AUTHORIZED FOR FURTHER REPRODUCTION OR DISTRIBUTION WITHOUT PERMISSION FROM ULSE INC.

Full document details: UL 2034 2023

b) The remote transmission radio of the carbon monoxide alarm shall comply with FCC Part 15.247 and the following frequency and field strength requirements:

1) Frequency range

i) 2.4 GHz (2.4 GHz – 2.4835 GHz)

ii) 900 MHz (902 – 928 MHz)

iii) 5.8 GHz (5725 – 5875 MHz)

2) Field strength

i) 30 dBm (1 W) (using antennas with directional gains < 6 dBi)

or

c) The manufacturer shall provide a defined test procedure, test frequency and field strength in compliance with FCC regulations that demonstrate the open field (line of sight) transmission range of the carbon monoxide alarm does not exceed 984 ft (300 m).

9 Voltage Classification

9.1 Unless otherwise indicated, all voltage and current values contained in this standard are rms.

a) Extra-Low-Voltage Circuit – A circuit that has an AC voltage of not more than 30 volts AC (42.4 volts peak) and maximum power of 100 volt-amperes, such as supplied by a Class 2 transformer; or a circuit of not more than 30 volts DC supplied by a primary battery; or a circuit supplied by a combination of a transformer and fixed impedance, that as a unit, complies with all the performance requirements of a Class 2 transformer. A circuit that is derived from a supply circuit of more than 30 volts by connecting resistance or impedance, or both, in series with the supply circuit to limit the voltage and current, is not considered to be an extra-low-voltage circuit.

b) Hazardous-Voltage Circuit – A circuit having characteristics in excess of those of an extra-low-voltage circuit.

10 Lifetime

10.1 The unit (including the sensor) shall have a specified lifetime of at least 3 years from the date of manufacture, or from the date the unit is placed into service. The unit reliability shall be estimated with an in-service reliability measurement, see 82(a). If the manufacturer bases the specified lifetime on the date that the unit is placed into service, this specification shall be substantiated with technical data documenting that performance degradation is not likely to occur prior to the unit being placed into service if the unit is placed into service within 18 months after manufacture. The selection of which basis is employed to define the beginning of specified lifetime may be contingent upon the technology of the sensor used in the unit.

CONSTRUCTION

11 General

11.1 Accessories

11.1.1 Unless specifically indicated otherwise, the construction requirements specified for an alarm shall apply also for any remote accessories with which it is to be employed.

This document is only permissible for use by Mohamed Waheed of Bechtel Global Corporation. 8/26/2023 6:21:46 PM

Documents
Document Sharing Hub

ULSE INC. COPYRIGHTED MATERIAL – NOT AUTHORIZED FOR FURTHER REPRODUCTION OR DISTRIBUTION WITHOUT PERMISSION FROM ULSE INC.

Full document details: UL 2034 2023

11.2 Sensitivity adjustment

11.2.1 A field sensitivity adjustment, if provided, shall be accessible with the alarm installed as intended, marked to indicate the direction of sensitivity (high or low), and shall employ a mechanical stop at both extremes. Removal of a snap-on cover to gain access to the sensitivity control is allowable, if no hazardous voltage parts are able to be contacted by the user. Adjustment extremes shall not exceed the values given in Table 41.1.

11.3 Supplementary signaling feature

11.3.1 A supplementary signaling feature, such as a transmitter for remote signaling, included integral with a single or multiple station carbon monoxide alarm, is to be compatible with the device(s) with which it is intended to be employed, and the remote signaling device(s) shall be acceptable for carbon monoxide alarm application.

12 Service and Maintenance Protection

12.1 General

12.1.1 An uninsulated live part of a hazardous-voltage circuit within the enclosure shall be located, guarded, or enclosed so as to reduce the risk of unintentional contact by persons performing service functions with the equipment energized.

12.1.2 An electrical component which may require examination, replacement, adjustment, servicing, or maintenance with the alarm energized shall be located and mounted with respect to other components and with respect to grounded metal so that it is accessible for such service without subjecting the user to an electric shock from adjacent uninsulated hazardous-voltage live parts.

12.1.3 The following are not considered to be uninsulated live parts:

a) Coils of relays, solenoids, and transformer windings, if the coils and windings are provided with insulating overwraps,

b) Terminals and splices with insulation rated for the intended application, and

c) Insulated wire.

12.2 Sharp edges

12.2.1 An edge, projection or corner of an enclosure, opening, frame, guard, knob, handle, or the like, of a carbon monoxide alarm shall be smooth and rounded, so as not to cause a cut-type injury when contacted during use or user maintenance.

13 Enclosure

13.1 General

13.1.1 The enclosure of an alarm shall be constructed to resist the abuses encountered in service. The degree of resistance to abuse inherent in the alarm shall preclude total or partial collapse with the attendant reduction of spacings, loosening or displacement of parts, and other defects that, alone or in combination, results in a risk of fire, electrical shock, or injury to persons.

13.1.2 Enclosures for individual electrical components, outer enclosures, and combinations of the two are to be considered in determining compliance with the requirement of 13.1.1.

This document is only permissible for use by Mohamed Waheed of Bechtel Global Corporation. 8/26/2023 6:21:46 PM

Documents
Document Sharing Hub

ULSE INC. COPYRIGHTED MATERIAL – NOT AUTHORIZED FOR FURTHER REPRODUCTION OR DISTRIBUTION WITHOUT PERMISSION FROM ULSE INC.

Full document details: UL 2034 2023

13.1.3 All electrical parts of an alarm, including a separate power supply, except for plug-in blades, shall be enclosed to provide protection against contact with uninsulated live parts. A separate enclosure for field-wiring terminals that will be enclosed by a junction box is not required.

13.1.4 There shall not be rear openings in a carbon monoxide alarm which are permeable to debris or air currents that affect alarm response.

13.1.5 There shall not be openings between the mounting surface to which an alarm is intended to be installed and the rear of the alarm which are permeable to air that affects alarm response.

13.1.6 To comply with 13.1.4 and 13.1.5, one of the following methods, or method determined to be equivalent, shall be used:

a) An elastomeric rubber or neoprene gasket, or the equivalent, may be placed between the rear of the alarm and the mounting surface to seal the rear openings or

b) Instructions in the installation manual may be provided to describe the location and method(s) of applying a sealing compound that has been determined to be acceptable for the intended use.

13.1.7 The enclosure of an alarm shall be provided with means for mounting in the intended manner. Any fittings, such as brackets, hangers, or the like, necessary for mounting shall be furnished with the alarm. The mounting means shall be accessible without disassembling any operating part of the alarm. The removal of a completely assembled panel or cover to mount the alarm is not considered to be disassembly of an operating part.

13.1.8 If the unit is intended for permanent connection in a hazardous voltage circuit, the enclosure shall either have provision for the connection of metal-clad cable, conduit, or nonmetallic sheathed cable, or have provision for mounting on an outlet box.

13.1.9 A mounting bracket, or other means provided to secure a detector system to a boat, shall be of a type and located so the installation maintains a fixed relationship to the boat when subjected to the vibration and shock loads of marine service. See 79.2.7– 79.2.15.

13.1.10 Among the factors taken into consideration when a frame or enclosure for a detector system intended for a boat is judged are:

a) Mechanical strength,

b) Resistance to impact,

c) Moisture-absorptive properties,

d) Combustibility,

e) Resistance to ignition from electrical sources,

f) Resistance to corrosion, and

g) Resistance to distortion at temperatures to which the enclosure is subjected under conditions of normal or abnormal use.

13.1.11 Materials which are to be exposed to moist environments shall not be adversely affected when subjected to the humidity conditioning specified in 79.2.16 and 79.2.17.

This document is only permissible for use by Mohamed Waheed of Bechtel Global Corporation. 8/26/2023 6:21:46 PM

Documents
Document Sharing Hub
ULSE INC. COPYRIGHTED MATERIAL – NOT AUTHORIZED FOR FURTHER REPRODUCTION OR DISTRIBUTION WITHOUT PERMISSION FROM ULSE INC.
Full document details: UL 2034 2023

13.2 Cast metal enclosures

13.2.1 The thickness of cast metal for an enclosure shall be as indicated in Table 13.1. Cast metal having a thickness 1/32 inch (0.8 mm) less than that indicated in Table 13.1 shall be employed only if the surface under consideration is curved, ribbed, or otherwise reinforced, or if the shape and/or size of the surface is such that equivalent mechanical strength is provided.

Table 13.1
Cast metal enclosures

Use, or dimensions of area involved	Minimum thickness			
	Die-cast metal,		Cast metal of other than the die-cast type,	
	inch	(mm)	inch	(mm)
Area of 24 square inches (155 cm^2) or less and having no dimension greater than 6 inches (152 mm)	1/16[a]	(1.6)	1/8	(3.2)
Area greater than 24 square inches (155 cm^2) or having any dimension greater than 6 inches (152 mm)	3/32	(2.4)	1/8	(3.2)
At a threaded conduit hole	1/4	(6.4)	1/4	(6.4)
At an unthreaded conduit hole	1/8	(3.2)	1/8	(3.2)

[a] The area limitation for metal 1/16 inch (1.6 mm) in thickness is able to be obtained by the provision of reinforcing ribs subdividing a larger area.

13.2.2 If threads for the connection of conduit are tapped all the way through a hole in an enclosure wall, there shall not be less than 3-1/2 nor more than five threads in the metal, and the construction shall be such that a standard conduit bushing is able to be attached.

13.2.3 If threads for the connection of conduit are tapped only part of the way through a hole in an enclosure wall, there shall not be less than 3-1/2 full threads in the metal, and there shall be a smooth, rounded inlet hole for the conductors which shall afford protection to the conductors equivalent to that provided by a standard conduit bushing.

13.3 Sheet metal enclosures

13.3.1 The thickness of sheet metal employed for the enclosure of an alarm shall not be less than that indicated in Table 13.2 unless the surface under consideration is curved, ribbed, or otherwise reinforced, or if the shape or size of the surface is such that equivalent mechanical strength is provided.

Table 13.2
Sheet metal enclosures

Maximum dimensions of enclosure				Minimum thickness of sheet metal					
				Steel					
Length or width,		Area,		Zinc-coated,		Uncoated,		Brass or aluminum,	
inches	(mm)	$inches^2$	(cm^2)	inch	(mm)	inch	(mm)	inch	(mm)
12	(305)	90	(581)	0.034	(0.86)	0.032	(0.81)	0.045	(1.14)
24	(610)	360	(2322)	0.045	(1.14)	0.042	(1.07)	0.058	(1.47)
48	(1219)	1200	(7742)	0.056	(1.42)	0.053	(1.35)	0.075	(1.91)
60	(1524)	1500	(9678)	0.070	(1.78)	0.067	(1.70)	0.095	(2.41)
Over 60	(Over 1524)	Over 1500	(Over 9678)	0.097	(2.46)	0.093	(2.36)	0.122	(3.10)

This document is only permissible for use by Mohamed Waheed of Bechtel Global Corporation. 8/26/2023 6:21:46 PM

ULSE INC. COPYRIGHTED MATERIAL – NOT AUTHORIZED FOR FURTHER REPRODUCTION OR DISTRIBUTION WITHOUT PERMISSION FROM ULSE INC.

Document Sharing Hub

Full document details: UL 2034 2023

13.3.2 At any point where conduit or metal-clad cable is to be attached, sheet metal shall have a thickness of not less than 0.032 inch (0.81 mm) if of uncoated steel, not less than 0.034 inch (0.86 mm) if of galvanized steel, and not less than 0.045 inch (1.14 mm) if of nonferrous metal.

13.3.3 A ferrous plate or plug closure for an unused conduit opening or other hole in the enclosure shall have a thickness not less than 0.027 or 0.032-inch (0.69 or 0.81-mm) nonferrous metal for a hole having a 1-3/8 inch (34.9 mm) diameter maximum dimension.

13.3.4 A closure for a hole larger than 1-3/8 inch (34.9 mm) diameter shall have a thickness equal to that required for the enclosure of the device or a standard knockout seal shall be used.

13.3.5 A knockout in a sheet metal enclosure shall be secured but shall be capable of being removed without undue deformation of the enclosure.

13.3.6 A knockout shall be provided with a surrounding surface for seating of a conduit bushing, and shall be so located that installation of a bushing at any knockout used during installation will not result in spacings between uninsulated live parts and the bushing of less than those indicated in Spacings, Section 36.

13.4 Nonmetallic enclosures

13.4.1 An enclosure or parts of an enclosure of nonmetallic material shall have the mechanical strength and durability and be so formed that operating parts are protected against damage. The mechanical strength of the enclosure shall be at least equivalent to a sheet metal enclosure of the minimum thickness specified in Table 13.2. See also the Tests of Thermoplastic Materials, Section 66.

13.4.2 The continuity of any grounding system to which an alarm is able to be connected shall not rely on the dimensional integrity of the nonmetallic material.

13.4.3 Polymeric material used for an enclosure shall comply with the following requirements:

a) Enclosure containing parts presenting risk of fire – Minimum flammability rating of V-0, and complies with the performance requirements of the Flammability – 5 Inch Flame Test in the Standard for Polymeric Materials – Use in Electrical Equipment Evaluations, UL 746C.

b) Enclosures containing Class 2 and Class 3 circuits with a voltage not exceeding 30 V AC, 42.4 V-peak, or 60 V DC – Minimum flammability rating of HB, and complies with the performance requirements of the Flammability – 3/4 Inch Flame Test in the Standard for Polymeric Materials – Use in Electrical Equipment Evaluations, UL 746C.

c) Enclosures containing circuits powered by batteries with energy limited to 15 watts – Minimum flammability rating of HB.

13.5 Ventilating openings

13.5.1 Ventilating openings in an enclosure for hazardous-voltage circuits including perforated holes, louvers, and openings protected by means of wire screening, expanded metal, or perforated covers, shall be of such size or shape that no opening permits passage of a rod having a diameter of 9/64 inch (3.6 mm). An enclosure for a fuse(s) or other overload protective device provided with ventilating openings shall afford protection against the emission of flame or molten metal. Openings provided to permit cleaning, or openings that are used to clean internal parts, shall be constructed to reduce the risk of damage to functional internal components during such cleaning operations.

This document is only permissible for use by Mohamed Waheed of Bechtel Global Corporation. 8/26/2023 6:21:46 PM

Documents
Document Sharing Hub
ULSE INC. COPYRIGHTED MATERIAL – NOT AUTHORIZED FOR FURTHER REPRODUCTION OR DISTRIBUTION WITHOUT PERMISSION FROM ULSE INC.
Full document details: UL 2034 2023

13.5.2 Except as noted in 13.5.3, perforated sheet metal employed for expanded metal mesh shall not be less than 0.042 inch (1.07 mm) in average thickness, 0.046 inch (1.17 mm) if zinc coated.

13.5.3 If the indentation of the guard or enclosure does not alter the clearance between uninsulated live parts and grounded metal so as to reduce spacings below the minimum values required, 0.021 inch (0.53 mm) expanded metal mesh or perforated sheet metal, 0.024 inch (0.61 mm) if zinc coated, is able to be employed under the following conditions:

a) The exposed mesh on any one side or surface of the product has an area of not more than 72 square inches (465 cm^2) and has no dimension greater than 12 inches (305 mm^2) or

b) The width of an opening so protected is not greater than 3-1/2 inches (88.9 mm).

13.5.4 The wires forming a screen protecting hazardous-voltage parts shall not be smaller than 16 AWG (1.3 mm^2) and the screen openings shall not be greater than 1/2 square inch (3.2 cm^2).

13.6 Covers

13.6.1 An enclosure cover shall be hinged, sliding, pivoted, or similarly attached when:

a) It provides ready access to fuses or any other overcurrent protective device, the intended protective functioning of which requires renewal or

b) It is necessary to open the cover periodically in connection with the intended operation of the alarm. For the purpose of this requirement, intended operation is considered to be operation of a switch for testing or operation of any other component of an alarm that requires such action in connection with its intended performance. This requirement does not apply to the battery replacement aspect of an alarm employing a battery as the main or standby supply.

13.6.2 A cover that is intended to be removed only for periodic maintenance shall be secured by any one of the following or equivalent means: positive snap catch, plug-in or twist action, snap tab with one screw, or two or more screws.

13.6.3 If an alarm cover is not intended to be removed for cleaning, maintenance, or both, and the alarm is intended to be returned to the factory for servicing, the cover shall be secured so that it cannot be readily removed. Exposed screw slots or nuts, other than a tamperproof type, shall be sealed or covered. See 87.1(s) for supplementary marking.

Exception: These requirements do not apply if the alarm cover is intended to be removed for cleaning, maintenance, or both, even though the alarm is intended to be returned to the manufacturer for servicing.

13.6.4 A hinged cover is not required where the only fuse(s) enclosed is intended to provide protection to portions of internal circuits, such as employed on a separate printed-wiring board or circuit subassembly, to prevent circuit damage resulting from a fault. Such fuses shall not be used unless the word "CAUTION" and the following or equivalent marking is located on the cover of an alarm employing hazardous-voltage circuits: "Circuit Fuse(s) Inside – Disconnect Power Prior To Servicing."

13.6.5 A hinged cover shall be provided with a latch, screw, or catch to hold it closed. An unhinged cover shall be securely held in place by screws or a means determined to be equivalent.

13.7 Transparent panels

13.7.1 Glass covering an enclosure opening shall be held securely in place so that it cannot be displaced in service and shall provide mechanical protection of the enclosed parts. The thickness of a glass cover shall not be less than that indicated in Table 13.3.

This document is only permissible for use by Mohamed Waheed of Bechtel Global Corporation. 8/26/2023 6:21:46 PM

Documents Document Sharing Hub

ULSE INC. COPYRIGHTED MATERIAL – NOT AUTHORIZED FOR FURTHER REPRODUCTION OR DISTRIBUTION WITHOUT PERMISSION FROM ULSE INC.

Full document details: UL 2034 2023

Table 13.3
Thickness of glass covers

Maximum size of opening				Minimum thickness,	
Length or width,		Area,			
inches	(mm)	inches^2	(cm^2)	inch	(mm)
4	(102)	16	(103)	1/16	(1.6)
12	(305)	144	(929_	1/8	(3.2)
Over 12	(Over 305)	Over 144	(Over 929)	See footnote a	

[a] 1/8 inch (3.2 mm) or more, depending upon the size, shape, and mounting of the glass panel. A glass panel for an opening having an area of more than 144 square inches (929 cm^2), or having any dimension greater than 12 inches (305 mm), shall be supported by a continuous groove not less than 3/16 inch (4.8 mm) deep along all four edges of the panel.

13.7.2 A transparent material other than glass employed as a cover over an opening in an enclosure shall:

a) Be mechanically equivalent to that of glass,

b) Not distort, or

c) Not become less transparent at the temperature to which it is subjected under normal service conditions.

13.7.3 A lens, light filter, or similar part of a carbon monoxide alarm shall be constructed of a material whose transparency will not be diminished by the conditions to which it will be exposed in service, as represented by the Performance Tests (see Sections 38 – 73) of this standard.

14 Corrosion Protection

14.1 Iron and steel parts shall be protected against corrosion by enameling, galvanizing, plating, or other equivalent means.

14.2 The requirement of 14.1 applies to all sheet steel or cast iron enclosures, and to all springs and other parts upon which mechanical operation depends. It does not apply to minor parts, such as washers, screws, and bolts, if the failure of such unprotected parts does not result in a risk of fire or electric shock or injury to persons or impair the operation of the alarm. Parts made of stainless steel, polished or treated if necessary, do not require additional protection. Bearing surfaces shall be of materials that will prevent binding due to corrosion.

14.3 Metal shall not be used in combinations such as to cause galvanic action which will adversely affect cabinets or enclosures.

14.4 Hinges and other attachments shall be resistant to corrosion.

14.5 Nonferrous cabinets and enclosures do not require special corrosion protection.

POWER SUPPLY

15 Primary Power Supply

15.1 The primary power supply of a single or multiple station carbon monoxide alarm shall be either an electrical power source or a battery or batteries. Connection to the electrical power source, if used, shall be in the form of permanent wiring to terminals or leads in a separate wiring compartment (see also

This document is only permissible for use by Mohamed Waheed of Bechtel Global Corporation. 8/26/2023 6:21:46 PM

Documents
Document Sharing Hub
ULSE INC. COPYRIGHTED MATERIAL – NOT AUTHORIZED FOR FURTHER REPRODUCTION OR DISTRIBUTION WITHOUT PERMISSION FROM ULSE INC.
Full document details: UL 2034 2023

13.1.8) having provision for the connection of conduit, metal-clad or nonmetallic sheathed cable, or by means of a power-supply cord and a two or three prong attachment plug.

15.2 If a separate power supply is provided, it shall have limited output energy consisting of an open circuit voltage not in excess of 30 volts rms, 42.4 volts peak or direct current (DC), and its output capacity shall be limited to a maximum of 100 volt-amperes. The energy shall be limited by an energy limited transformer having an output rating of 100 volt-amperes or less, or by a transformer plus additional circuitry having characteristics equivalent to those of a Class 2 transformer.

16 Secondary Power Supply (Not Applicable for Commercial Vehicles)

16.1 The use of a secondary power supply is required for all alarms that receive their primary power from a source other than an integral battery or batteries. The secondary power supply, such as a battery, shall have the capacity to supply the maximum intended power to the alarm for 24 hours in the standby condition and thereafter be able to operate the alarm for an alarm signal for at least 12 hours continuously, followed by not less than 7 consecutive days of trouble signal.

16.2 If a battery is employed for the secondary power supply, it shall be of a rechargeable or nonrechargeable type. For a rechargeable type battery, the maximum charging current, as well as the maximum trickle charging current available, shall not exceed the battery manufacturer's specifications. For a nonrechargeable type battery, data on battery life, including discharge curves, shall be provided for the investigation to evaluate battery shelf aging and performance characteristics.

16.3 If a battery is employed as a secondary power supply, the marking on the unit shall include the manufacturer's specified periodic battery replacement instructions.

16.4 The discharge condition of a non-rechargeable or rechargeable type battery shall be monitored where a trouble indication, as described in 40.1.3, is obtained. The monitoring shall take place whether the alarm is operating on the primary supply or on the standby supply.

17 Batteries

17.1 General

17.1.1 If a battery or set of batteries is employed as the main source of power of a single or multiple station carbon monoxide alarm, it shall meet the requirements of the Battery Tests, Section 64.

17.1.2 Batteries included as part of an alarm shall be so located and mounted that terminals of cells will be prevented from coming in contact with uninsulated live parts, terminals or adjacent cells, or metal parts of the enclosure as a result of shifting.

17.1.3 A battery compartment intended for use with rechargeable batteries which emit gases during charging shall be provided with vent holes.

17.1.4 Ready access shall be available to the battery compartment to facilitate battery replacement, without damage to the alarm components or disassembly of any part of the alarm, except for a cover or the equivalent.

17.1.5 Connections of external wiring to a battery-operated single- or multiple-station carbon monoxide alarm, or to a portable accessory, shall not be subjected to stress or motion during battery replacement and/or servicing. Removal of the alarm or accessory from the mounting support to replace a battery or to service the unit is not allowed unless the connected wiring is not subjected to flexing or stress.

This document is only permissible for use by Mohamed Waheed of Bechtel Global Corporation. 8/26/2023 6:21:46 PM

Documents
Document Sharing Hub
ULSE INC. COPYRIGHTED MATERIAL – NOT AUTHORIZED FOR FURTHER REPRODUCTION OR DISTRIBUTION WITHOUT PERMISSION FROM ULSE INC.
Full document details: UL 2034 2023

17.1.6 A carbon monoxide alarm powered by a non-replaceable battery shall be provided with a means of activating the power prior to installation and deactivating the battery at the end of the useful battery life. The deactivation means shall require the use of a tool, or equivalent, and shall render the unit resistant to being reinstalled. The deactivation means shall also serve to discharge the battery(ies) completely. Both the activation and deactivation means shall be designed to operate one time only. The installation instructions shall provide the user with information describing this one time operation. See 88.1(u).

17.2 Battery connections

17.2.1 Lead or terminal connections to batteries shall be identified with the proper polarity (plus or minus signs), and provided with strain relief. Indicating polarity on the unit adjacent to the battery terminals or leads is not prohibited.

17.2.2 Connections to battery terminals shall be either by a lead terminating in a positive snap action type of clip, or a fixed butt type connection which applies a minimum of 1.5 pounds (6.6 N) force to each battery contact, or equivalent. The connection shall consist of an unplatted or plated metal which is resistant to the corrosive action of the electrolyte.

17.2.3 Each lead of a clip-lead assembly employed as part of a battery operated alarm shall be a minimum of 26 AWG (0.21 mm^2) stranded wire with a minimum 1/64-inch (0.4-mm) insulation.

18 Supplementary Signaling Circuits

18.1 For a cord-connected or battery operated single station alarm employing a supplementary signaling circuit which is energized from a separate source of supply, the source of energy shall not exceed the energy limits defined in 72.2.1 and 72.2.2.

18.2 For an alarm intended to be connected to a fixed wiring system and employing a separately energized signaling circuit, the source of energy shall not exceed the limits in 72.2.1 unless the connections are made as a Class 1 wiring system as defined in the National Electrical Code, ANSI/NFPA 70-1996, or in the Canadian Electrical Code, Part 1 (CSA Standard C22.1).

FIELD WIRING

19 Permanent Connection

19.1 General

19.1.1 A single station or multiple station carbon monoxide alarm intended for permanent connection to a hazardous voltage circuit shall be provided with wiring terminals or leads for the connection of conductors of at least the size required by the National Electrical Code, ANSI/NFPA 70-1996, or the Canadian Electrical Code, Part 1 (CSA Standard C22.1), corresponding to the rating of the unit.

19.2 Field-wiring compartment for hazardous voltage connection

19.2.1 The field-wiring compartment area is to be of sufficient size for completing all field-wiring connections as specified by the installation wiring diagram. There shall be space within the compartment to permit the use of a standard conduit bushing on conduit connected to the compartment if a bushing is required for installation.

19.2.2 Protection for internal components and wire insulation from sharp edges shall be provided by insulating barriers or metal barriers having smooth rounded edges.

This document is only permissible for use by Mohamed Waheed of Bechtel Global Corporation. 8/26/2023 6:21:46 PM

Documents
Document Sharing Hub

ULSE INC. COPYRIGHTED MATERIAL – NOT AUTHORIZED FOR FURTHER REPRODUCTION OR DISTRIBUTION WITHOUT PERMISSION FROM ULSE INC.

Full document details: UL 2034 2023

19.3 Field-wiring terminals

19.3.1 Terminal parts to which field connections are to be made shall consist of binding screws with terminal plates having upturned lugs or a means determined to be equivalent to hold the wires in position. Other terminal connections shall not be provided unless determined to be equivalent.

19.3.2 If a wiring-binding screw is employed at a field-wiring terminal, the screw shall not be smaller than a No. 6 (3.5 mm diameter).

19.3.3 Except as noted in 19.3.4, a terminal plate tapped for a wire-binding screw shall be of metal not less than 0.030 inch (0.76 mm) thick and shall not have less than two full threads in the metal.

19.3.4 A terminal plate shall have the metal extruded at the tapped hole for the binding screw so as to provide two full threads. Other constructions shall be employed only if they provide equivalent security.

19.3.5 Wiring terminal assemblies that are used for field connections shall be prevented from turning.

19.4 Field-wiring leads

19.4.1 Power supply leads provided for field connection shall not be less than 6 inches (152 mm) long, provided with strain relief, and shall not be smaller than 18 AWG (0.82 mm^2); and the insulation, if thermoplastic, shall not be less than 1/32 inch (0.8 mm) in thickness.

Exception No. 1: The lead may be less than 6 inches long if it is evident that the use of a longer lead may result in damage to the insulation.

Exception No. 2: Solid copper leads as small as 26 AWG (0.13 mm^2) may be used if:

a) The current does not exceed 1 ampere for lengths up to 2 feet (61 cm) and the current does not exceed 0.4 ampere for lengths up to 10 feet (3.05 m);

b) There are two or more conductors and they are covered by a common jacket or the equivalent;

c) The assembled conductors comply with the requirements of the Strain Relief Test, Section 71; and

d) The installation instructions indicate that the lead cannot be spliced to a conductor larger than 18 AWG.

19.4.2 Leads provided for field connection to power limited signaling circuits, such as employed for multiple station interconnection or for connection to remote signaling devices, shall not be smaller than 16 AWG (1.3 mm^2), for a single conductor, 19 AWG (0.65 mm^2) for two or more conductors, and 26 AWG (0.13 mm^2) for four or more conductors of a multiconductor cable. The conductor shall be solid, bunch tinned stranded, or stranded copper. Stranded copper wire, consisting of not more than seven strands, may be employed only for 18 AWG (0.82 mm^2) and larger conductors.

19.5 Grounded supply terminals and leads

19.5.1 A field-wiring terminal for the connection of a neutral supply conductor shall be identified by means of a metallic plated coating substantially white in color and shall be readily distinguishable from the other terminals, or proper identification of the terminal for the connection of the neutral conductor shall be clearly shown in some other manner, such as on an attached wiring diagram.

This document is only permissible for use by Mohamed Waheed of Bechtel Global Corporation. 8/26/2023 6:21:46 PM

Documents
Document Sharing Hub

ULSE INC. COPYRIGHTED MATERIAL – NOT AUTHORIZED FOR FURTHER REPRODUCTION OR DISTRIBUTION WITHOUT PERMISSION FROM ULSE INC.

Full document details: UL 2034 2023

19.5.2 A field-wiring lead provided for connection of a neutral supply conductor shall be finished to show a white or gray color and shall be readily distinguishable from other leads. No leads other than neutral conductors, shall be so identified.

19.5.3 A terminal or lead identified for the connection of the neutral supply conductor shall not be electrically connected to a single-pole manual switching device that has an OFF position or to a single-pole overcurrent (not thermal) protective device.

20 Power Supply Cord

20.1 A cord-connected single station carbon monoxide alarm shall be provided with not less than 6 feet (1.83 m) nor more than 20 feet (6.10 m) of flexible cord and a two or three prong attachment plug of the type and rating for connection to the supply circuit.

Exception: The cord may be less than 6 feet in length if it is evident that the use of a longer cord:

a) May result in a risk of fire or electric shock;

b) May result in unintentional contact with moving parts that may cause a risk of injury to persons; and

c) Is not required for the intended operation of the product.

20.2 The flexible cord shall be of Type SP-1, SPT-1, SP-2, SPT-2, SV, SVT, SJ, SJT, SPE, SVE, or equivalent, minimum 18 AWG (0.82 mm^2). It shall be rated for use at the voltage and ampacity rating of the alarm, in accordance with the National Electrical Code, ANSI/NFPA 70, or the Canadian Electrical Code, Part 1 (CSA Standard C22.1).

20.3 Means shall be provided to prevent the flexible cord from being pushed into the enclosure through the cord-entry hole if such displacement:

a) Subjects the cord to mechanical damage or to exposure to a temperature higher than that for which the cord is rated,

b) Reduces spacings below the minimum acceptable values, or

c) Results in damage in internal components.

20.4 A smoothly rounded restraining means shall be provided for securing the attachment plug to the receptacle. See the Strain Relief Test, Section 71.

20.5 The power supply cord shall be provided with strain relief means so that a stress on the cord will not be transmitted to terminals, splices, or internal wiring. See the Strain Relief Test, Section 71.

20.6 If a knot in a flexible cord serves as strain relief, a surface against which the knot may bear or with which it may come in contact shall be free from projections, sharp edges, burrs, and fins that may cause abrasion of the insulation on the conductors.

20.7 Clamps of any material (metal or otherwise) are acceptable for use on cords and supply leads without varnished-cloth insulating tubing or the equivalent under the clamp unless the tubing or the equivalent is necessary to prevent the clamp from damaging the cord or supply leads.

This document is only permissible for use by Mohamed Waheed of Bechtel Global Corporation. 8/26/2023 6:21:46 PM

Documents
Document Sharing Hub

ULSE INC. COPYRIGHTED MATERIAL – NOT AUTHORIZED FOR FURTHER REPRODUCTION OR DISTRIBUTION WITHOUT PERMISSION FROM ULSE INC.

Full document details: UL 2034 2023

21 Equipment Grounding

21.1 General

21.1.1 An equipment grounding terminal or lead, or equivalent, is required for a hazardous-voltage alarm that is intended to be serviced internally and employs internal dead metal parts that become energized under a fault condition.

21.1.2 An equipment grounding terminal or lead is not required for:

a) An extra-low-voltage alarm;

b) A hazardous-voltage alarm provided with an overall nonmetallic enclosure and cover, and that is not intended to be internally serviced; or

c) A hazardous-voltage alarm provided with an overall nonmetallic enclosure and cover, that does not employ internal dead metal parts that become energized under a fault condition and is able to be contacted during servicing.

21.2 Permanently-connected units

21.2.1 The surface of an insulated lead intended solely for the connection of an equipment-grounding conductor shall be green, with or without one or more yellow stripes. No other leads visible to the installer, other than grounding conductors, shall be so identified. A field-wiring terminal intended for connection of an equipment-grounding conductor shall be plainly identified, such as being marked "G," "GR," "Ground," "Grounding," or a means determined to be equivalent, or by a marking on a wiring diagram provided on the alarm. The field-wiring terminal shall be so located that it cannot be removed during servicing of the alarm.

21.3 Cord-connected units

21.3.1 The grounding means for a cord-connected alarm that is intended to be serviced internally shall consist of a separate grounding lead integral with the supply cord and terminating in the grounding pin of a parallel blade attachment plug.

22 Remote Power Supply Leads

22.1 For an alarm that is intended to be connected to a separate remote power supply such as a transformer, the supply cord is not required to be factory wired to the alarm, or to the transformer terminals or leads, if the installation instructions provided with the unit are explicit regarding the method of connection. The minimum size conductors between the alarm and remote power supply shall not be less than 18 AWG (0.82 mm^2) and shall not be longer than 20 feet (6.1 m). The interconnecting wiring is to be provided by the manufacturer.

22.2 Where longer runs of interconnecting wiring are used in an installation, such as in a multiple station configuration, or where several alarms are supplied by a common power supply, the manufacturer is not required to provide the wiring. However, the installation wiring diagram or instructions shall be marked to specify that the wiring to be used shall be in accordance with the provisions of Article 725 of the National Electrical Code, ANSI/NFPA 70, or Section 33 of the Canadian Electrical Code, Part 1 (CSA Standard C22.1). In addition, the resistance of the interconnecting wiring shall be a maximum of 10 ohms, unless otherwise specified by the manufacturer.

This document is only permissible for use by Mohamed Waheed of Bechtel Global Corporation. 8/26/2023 6:21:46 PM

Documents
Document Sharing Hub

ULSE INC. COPYRIGHTED MATERIAL – NOT AUTHORIZED FOR FURTHER REPRODUCTION OR DISTRIBUTION WITHOUT PERMISSION FROM ULSE INC.

Full document details: UL 2034 2023

INTERNAL WIRING

23 General

23.1 The internal wiring of an alarm shall consist of conductors having insulation rated for the voltage involved and the temperatures to which it shall be subjected, and shall have the mechanical strength and current-carrying capacity for the service. The wiring shall be routed away from moving parts and sharp projections and held in place with clamps, string, ties, or equivalent, unless of sufficient rigidity to retain a shaped form.

23.2 Leads, or a cable assembly, connected to parts mounted on a hinged cover shall be of sufficient length to permit the full opening of the cover without applying stress to the leads or their connections. The leads shall be secured or equivalently arranged to prevent abrasion of insulation and jamming between parts of the enclosure.

23.3 If the use of a short length of insulated conductor is not feasible, such as for a short coil lead, the use of electrical insulating tubing is not prohibited. The tubing shall not be subjected to sharp bends, tension, compression, or repeated flexing, and shall not contact sharp edges, projections, or corners. The wall thickness of the tubing shall conform to the requirements for such tubing, except that the wall thickness at any point for polyvinyl chloride tubing of 3/8 inch (9.5 mm) diameter or less, shall not be less than 0.017 inch (0.43 mm). For insulating tubing of other types the wall thickness shall not be less than that required to at least equal the mechanical strength, dielectric properties, and heat and moisture resistance characteristics of polyvinyl chloride tubing having a wall thickness of 0.017 inch (0.43 mm).

23.4 Internal wiring of circuits operating at different potentials shall be separated by barriers or shall be segregated, unless the conductors of the circuits of lower voltage are provided with insulation equivalent to that required for the highest voltage involved. Segregation of insulated conductors shall be accomplished by clamping, routing, or equivalent means that provides permanent separation.

23.5 Stranded conductors clamped under wire-binding screws, or similar parts, shall have the individual strands soldered together or be equivalently arranged, to provide reliable connections.

24 Wireways

24.1 Wireways shall be smooth and free from sharp edges, burrs, fins, and moving parts that cause abrasion of the conductor insulation.

25 Splices

25.1 All splices and connections shall be mechanically secured to preclude shorting to adjacent uninsulated current carrying parts in the event that an improper connection, such as a cold solder joint, is made. Tack soldering is not to be used unless the design precludes mechanical security and five samples resist a pull force of 2 pounds (8.9 N) applied for 3 seconds and the connection is subjected to 100 percent inspection and testing with the same pull force by the manufacturer.

25.2 A splice shall be provided with insulation equivalent to that of the wires involved, if permanence of electrical spacing between the splice and uninsulated metal parts is not assured.

25.3 Splices shall be located, enclosed, and supported so that flexing, movement, or vibration will not damage the insulation or affect the integrity of the splice.

This document is only permissible for use by Mohamed Waheed of Bechtel Global Corporation. 8/26/2023 6:21:46 PM

Documents
Document Sharing Hub

ULSE INC. COPYRIGHTED MATERIAL – NOT AUTHORIZED FOR FURTHER REPRODUCTION OR DISTRIBUTION WITHOUT PERMISSION FROM ULSE INC.

Full document details: UL 2034 2023

26 Barriers

26.1 A metal barrier shall have a thickness at least equal to that required by Table 13.2, as determined by the size of the barrier. A barrier of insulating material shall not be less than 0.028 inch (0.71 mm) thick and shall be thicker if its deformation may be readily accomplished so as to defeat its purpose. Any clearance between the edge of a barrier and a compartment wall shall not be more than 1/16 inch (1.6 mm).

27 Grounding and Bonding

27.1 An exposed dead metal part that becomes energized by hazardous voltage shall be bonded to the point of connection of the alarm grounding terminal or lead, and to the metal surrounding the knockout, hole, or bushing provided for field power supply connections.

27.2 Except as indicated in 27.3, uninsulated metal parts of electrical enclosures, transformer cores, mounting brackets, capacitors, and other electrical components shall be bonded for grounding if they may be contacted by the user or by a service person servicing or operating the equipment.

27.3 Metal parts as described below, are not required to comply with the requirement of 27.1 and 27.2:

a) Adhesive attached parts, such as a metal foil markings, screws, or handles that are located on the outside of the enclosure and isolated by grounded metal parts from electrical components or wiring by grounded metal parts so that they cannot become energized.

b) Isolated metal parts, such as small assembly screws, that cannot come in contact with wiring and uninsulated live parts.

c) Panels or covers that do not enclose uninsulated live parts when they cannot come in contact with wiring which causes them to become energized.

d) Panels or covers that are insulated from electrical components and wiring by an insulating barrier that is secured in place and is made of vulcanized fibre, varnished cloth, phenolic composition, or similar material not less than 1/32 inch (0.8 mm) thick.

27.4 The bonding shall be by a positive means, such as by clamping, riveting, brazing, welding, or making a bolted or screwed connection. The bonding connection shall penetrate nonconductive coatings, such as paint. Bonding around a resilient mount shall not depend on the clamping action of rubber or similar material.

27.5 A bolted or screwed connection that incorporates a star washer or serration under the screwhead is acceptable for penetrating nonconductive coatings as required by 27.4.

27.6 The use of two or more screws, or two full threads engagement of a single screw in metal, complies with 27.4 if the bonding means depends upon screw threads.

27.7 Metal-to-metal hinge bearing members for doors or covers shall not be used as means of bonding the door or cover for grounding unless a multiple bearing-pin type (piano type) hinge is used.

27.8 The size of a copper or aluminum conductor employed to bond an electrical enclosure shall be based on the rating of the branch circuit overcurrent device by which the alarm will be protected. Except as noted below, the size of the conductor shall comply with the applicable requirements for connection of an equipment grounding conductor as specified in Table 250-95 of the National Electrical Code, ANSI/NFPA 70, and Table 16 of the Canadian Electrical Code, Part 1, CSA Standard C22.1, except that such a conductor need be not larger than one of the power supply conductors.

This document is only permissible for use by Mohamed Waheed of Bechtel Global Corporation. 8/26/2023 6:21:46 PM

Documents
Document Sharing Hub

ULSE INC. COPYRIGHTED MATERIAL – NOT AUTHORIZED FOR FURTHER REPRODUCTION OR DISTRIBUTION WITHOUT PERMISSION FROM ULSE INC.

Full document details: UL 2034 2023

27.9 A bonding conductor to an electrical component need not be larger than the conductor supplying the component.

27.10 A bonding conductor in an alarm shall have insulation equivalent to that of live conductors, if there is any possibility of accidental contact between the bonding conductor and uninsulated live parts.

27.11 Splices shall not be employed in wire conductors used for bonding.

ELECTRICAL COMPONENTS

28 General

28.1 Mounting of components

28.1.1 A switch, lampholder, attachment-plug receptacle, plug connector, or similar electrical component, and uninsulated live parts shall be mounted securely and shall be prevented from turning.

Exception No. 1: It is not required that a switch be prevented from turning when all four of the following conditions are met:

a) The switch is a plunger or other type that does not rotate when operated. A toggle switch is considered to be subject to forces that tend to turn the switch during operation of the switch.

b) The means for mounting the switch makes it unlikely that the operation of the switch will loosen it.

c) The spacings are not reduced below the minimum required values if the switch rotates.

d) The operation of the switch is by mechanical means rather than by direct contact by persons.

Exception No. 2: A lampholder of the type in which the lamp cannot be replaced, such as a neon pilot or indicator light in which the lamp is sealed in a nonremovable jewel, is not required to be prevented from turning if rotation cannot reduce spacings below the minimum values required. See Spacings, Section 36.

28.1.2 Uninsulated live parts shall be so secured to the base or mounting surface that they will be prevented from turning or shifting in position, if such motion may result in a reduction of spacings. Friction between surfaces is not acceptable as a means to prevent shifting or turning of live parts, but a properly applied lock washer may be accepted.

28.1.3 Uninsulated live parts, for example field-wiring terminals, shall be secured to their supporting surfaces by methods other than friction between surfaces so that they will be prevented from turning or shifting in position if such motion results in reduction of spacings below the minimum values required. This shall be accomplished by two screws or rivets; by square shoulders or mortises; by a dowel pin, lug, or offset; by a connecting strap or clip fitted into an adjacent part; or by some other equivalent method.

28.2 Operating components

28.2.1 Operating components and assemblies, such as switches, relays, and similar devices, shall be protected by individual dust covers or dust tight cabinets, against fouling by dust or by other material that impairs their operation.

28.2.2 Adjusting screws and similar adjustable parts shall be prevented from loosening under the conditions of actual use. A properly applied lock washer is one method of preventing loosening.

This document is only permissible for use by Mohamed Waheed of Bechtel Global Corporation. 8/26/2023 6:21:46 PM

Documents
Document Sharing Hub

ULSE INC. COPYRIGHTED MATERIAL – NOT AUTHORIZED FOR FURTHER REPRODUCTION OR DISTRIBUTION WITHOUT PERMISSION FROM ULSE INC.

Full document details: UL 2034 2023

28.3 Current-carrying parts

28.3.1 Bearings, hinges, and similar items shall not be used for current carrying parts.

28.4 Electrical insulating material

28.4.1 Material for the mounting of uninsulated live parts shall be porcelain, phenolic composition, cold-molded composition, or equivalent material.

28.4.2 Vulcanized fiber is suitable for insulating bushings, washers, separators, and barriers, but not as the sole support for uninsulated live parts of other than extra-low-voltage circuits.

28.4.3 Polymeric materials shall not be used for the sole support of uninsulated live parts unless they are determined to be equivalent to the materials indicated in 28.4.1.

28.4.4 A flat sheet of insulating material, such as phenolic composition employed for panel-mounting of parts, shall not be less than 1/16 inch (1.6 mm) thick. Material less than 1/16 inch in thickness shall not be employed unless the panel is supported or reinforced to provide equivalent rigidity.

28.4.5 When a terminal block mounted on a metal surface is grounded it shall be provided with an insulating barrier between the mounting surface and all uninsulated live parts on the underside of the base unless the parts are staked, upset, sealed, or equivalently prevented from loosening so as to prevent the parts and the ends of replaceable terminal screws from coming in contact with the supporting surface or reducing spacings below the minimum values required.

28.4.6 A countersunk sealed part shall be covered with a waterproof insulating compound which will not melt at a temperature of 15°C (27°F) higher than the maximum normal operating temperature of the assembly, and not less than 65°C (149°F) in any case. The depth or thickness of the sealing compound shall not be less than 1/8 inch (3.2 mm).

29 Bushings

29.1 If a lead or wire harness passes through an opening in a wall, barrier, or enclosing case, there shall be a metal or insulating type bushing, or a means determined to be equivalent, which shall be substantial, secured in place, and have a smooth rounded surface.

29.2 If the opening is in a phenolic composition or other nonconducting material, or in metal of thickness greater than 0.042 inch (1.07 mm), a smooth surface having rounded edges is considered to be the equivalent of a bushing.

29.3 Ceramic materials and some molded compositions are suitable for insulating bushings, but separate bushings of wood and hot-molded shellac shall not be used.

29.4 Fiber shall be employed only where:

a) It is not subjected to a temperature higher than 90°C (194°F) under normal operating conditions,

b) The bushing is not less than 1/16 inch (1.6 mm) in thickness, with a minus tolerance of 1/64 inch (0.4 mm) for manufacturing variations, and

c) It is not affected adversely by ordinary ambient humidity conditions.

This document is only permissible for use by Mohamed Waheed of Bechtel Global Corporation. 8/26/2023 6:21:46 PM

Documents
Document Sharing Hub
ULSE INC. COPYRIGHTED MATERIAL – NOT AUTHORIZED FOR FURTHER REPRODUCTION OR DISTRIBUTION WITHOUT PERMISSION FROM ULSE INC.
Full document details: UL 2034 2023

29.5 If a soft-rubber bushing or similar material that deteriorates with age is employed in a hole in metal, the hole shall be free from sharp edges, burrs, and other projections that cut into the bushing and wire insulation.

29.6 An insulating metal grommet shall be used in lieu of an insulating bushing only when the insulating material used is not less than 1/32 inch (0.8 mm) in thickness and fills completely the space between the grommet and the metal in which it is mounted.

30 Lampholders and Lamps

30.1 A single and/or multiple station carbon monoxide alarm intended to be connected to an alternating current (ac) power source shall be provided with a "power-on" lamp to indicate energization of the unit.

30.2 If more than one lamp is provided on the alarm, the "power-on" lamp shall be white or green, an alarm indicating lamp shall be red, and a trouble lamp shall be amber or yellow.

30.3 A lampholder and lamp shall be rated for the circuit in which they are employed.

30.4 A lampholder in a hazardous-voltage circuit shall be wired so that the screw shell will be connected to an identified (neutral) conductor.

30.5 A lampholder shall be installed so that uninsulated hazardous-voltage live parts will not be exposed to contact by persons removing or replacing lamps in service.

30.6 A lamp or equivalent means, such as a distinctive audible signal indication, shall be provided on an alarm intended for multiple-station interconnection to identify the unit from which the alarm was initiated.

31 Protective Devices

31.1 Fuseholders, fuses, and circuit breakers shall be rated for the application.

32 Printed-Wiring Boards

32.1 The components of a printed-wiring board shall be secured in place and the spacings between circuits shall comply with the spacings requirements for rigidly clamped assemblies (Table 36.1). The board shall be mounted so that deflection of the board during servicing shall not result in damage to the board or risk of fire or electric shock.

32.2 A printed-wiring board shall comply with the requirements in the Standard for Printed-Wiring Boards, UL 796, and shall be mounted so that moisture does not accumulate on the board.

33 Switches

33.1 A switch shall have a current and voltage rating not less than that of the circuit which it controls. There shall be no power switches provided with an alarm.

33.2 If a reset switch is provided, it shall be of a self-restoring (momentary) type.

34 Transformers and Coils

34.1 A transformer shall be of the two-coil or isolated-winding type.

This document is only permissible for use by Mohamed Waheed of Bechtel Global Corporation. 8/26/2023 6:21:46 PM

Documents
Document Sharing Hub

ULSE INC. COPYRIGHTED MATERIAL – NOT AUTHORIZED FOR FURTHER REPRODUCTION OR DISTRIBUTION WITHOUT PERMISSION FROM ULSE INC.

Full document details: UL 2034 2023

Exception: It is not prohibited that an autotransformer be employed in an alarm intended for permanent connection only, when the terminal or lead connected to the autotransformer winding which is common to both input and output circuits is identified, and that the output circuits are located only within the enclosure containing the autotransformer. See 19.5.1 and 19.5.2.

34.2 The insulation of coil windings of relays, transformers and the like shall be such as to resist the absorption of moisture.

34.3 Film-coated or equivalently insulated wire is not required to be given additional treatment to prevent moisture absorption.

35 Dropping Resistors

35.1 A carbon composition resistor shall not be used as a dropping resistor in the hazardous-voltage circuit of an alarm.

36 Spacings

36.1 Spacings shall be maintained between uninsulated live parts and dead metal parts, and between uninsulated live parts of opposite polarity. The spacings shall not be less than those indicated in Table 36.1.

36.2 The spacings between an uninsulated live part and a wall or cover of a metal enclosure; fitting for conduit or metal-clad cable; and any dead metal part shall not be less than that indicated in Table 36.1.

36.3 The "Through air" and "Over surface" spacings of Table 36.1 measured at an individual component part are to be judged on the basis of the volt-amperes used and controlled by the individual component. However, the spacings from one component to another, and from any component to the enclosure or to other uninsulated dead metal parts, excluding the component mounting surface, shall be judged on the basis of the maximum voltage and total volt-amperes rating of all components in the enclosure.

36.4 The spacing requirements in Table 36.1 do not apply to the inherent spacings inside motors, except at wiring terminals, or to the inherent spacings of a component provided as part of the alarm. Such spacings are judged on the basis of the requirements for the component. The electrical clearance resulting from the assembly of a component into the complete device, including clearances to dead metal or enclosures, shall be those indicated in Table 36.1.

36.5 The "To wall of enclosure" spacings of Table 36.1 are not to be applied to an individual enclosure of a component part within an outer enclosure.

36.6 Enameled or equivalently insulated wire is to be considered an uninsulated live part, but enamel is acceptable as turn-to-turn insulation in coils.

This document is only permissible for use by Mohamed Waheed of Bechtel Global Corporation. 8/26/2023 6:21:46 PM

Documents
Document Sharing Hub

ULSE INC. COPYRIGHTED MATERIAL – NOT AUTHORIZED FOR FURTHER REPRODUCTION OR DISTRIBUTION WITHOUT PERMISSION FROM ULSE INC.

Full document details: UL 2034 2023

Table 36.1
Minimum spacings

Point of application	Voltage range	Minimum spacings[a,b]			
		Through air,		Over surface,	
		inch	(mm)	inch	(mm)
To walls of enclosure:					
Cast metal enclosures	0 – 300	1/4	(6.4)	1/4	(6.4)
Sheet metal enclosures	0 – 300	1/2	(12.7)	1/2	(12.7)
Installation wiring terminals:					
With barriers	0 – 30	1/8	(3.2)	3/16	(4.8)
	31 – 150	1/8	(3.2)	1/4	(6.4)
	151 – 300	1/4	(6.4)	3/8	(9.5)
Without barriers	0 – 30	3/16	(4.8)	3/16	(4.8)
	31 – 150	1/4	(6.4)	1/4	(6.4)
	151 – 300	1/4	(6.4)	3/8	(9.5)
Rigidly clamped assemblies:[c]					
100 volt-amperes maximum[d]	0 – 30	1/32	(0.8)	1/32	(0.8)
Over 100 volt-amperes	0 – 30	3/64	(1.2)	3/64	(1.2)
	31 – 150	1/16	(1.6)	1/16	(1.6)
	151 – 300	3/32	(2.4)	3/32	(2.4)
Other parts	0 – 30	1/16	(1.6)	1/8	(3.2)
	31 – 150	1/8	(3.2)	1/4	(6.4)
	151 – 300	1/4	(6.4)	3/8	(9.5)

[a] An insulating liner or barrier of vulcanized fiber, varnished cloth, mica, phenolic composition, or similar material employed where spacings will otherwise be insufficient shall not be less than 0.028 inch (0.71 mm) thick; except that a liner or barrier not less than 0.013 inch (0.33 mm) thick is usable in conjunction with an air spacing of not less than one-half of the through air spacing required. The liner shall be located so that it is not affected adversely by arcing. Insulating material having a thickness less than that specified shall be used only if it is approved for the particular application.

[b] Measurements are to be made with solid wire of acceptable ampacity for the applied load connected to each terminal. In no case is the wire to be smaller than 16 AWG (1.3 mm^2).

[c] Rigidly clamped assemblies include such parts as contact springs on relays or cam switches, printed-wiring boards, and the like.

[d] Spacings less than those indicated, but not less than 1/64 inch (0.4 mm), are acceptable for the connection of integrated circuits and similar components where the spacing between adjacent connecting wires on the component is less than 1/32 inch (0.8 mm).

PERFORMANCE

37 General

37.1 Test units and data

37.1.1 Alarms that are fully representative of production units are to be used for all tests. The range of sensitivities (ppm CO), regardless of time, which can lead to an alarm signal shall be provided for the samples. This range will define the production sensitivity.

37.1.2 The following samples are to be provided for testing:

a) At least 15 assembled alarms.

b) One additional unassembled alarm.

This document is only permissible for use by Mohamed Waheed of Bechtel Global Corporation. 8/26/2023 6:21:46 PM

Documents
Document Sharing Hub
ULSE INC. COPYRIGHTED MATERIAL – NOT AUTHORIZED FOR FURTHER REPRODUCTION OR DISTRIBUTION WITHOUT PERMISSION FROM ULSE INC.
Full document details: UL 2034 2023

c) Installation and operating instructions (see 89.1 and 89.2 and Section 88).

d) For alarms employing a battery as the main operating supply, 24 additional battery operated alarms for long term battery tests or equivalent test circuit set-ups with appropriate measuring facilities to monitor the battery voltage, standby current, and alarm current. Each set-up, if provided, is to be representative of six alarms and is to include test terminals and switches, limiting resistors, the alarm horn, and batteries. The value of resistors is to represent the normal standby current which is obtained from a complete alarm.

37.1.3 The batteries are to be connected in the test circuit with the same terminal arrangement employed in the alarm. Provision for connection of the actual sounding appliance used in the alarm for random and weekly testing is also to be made. (See the Battery Tests, Section 64.)

37.1.4 Before, during, and after the tests specified in Sections 41, 42, 44, 48, and 49 of this Standard, all alarm samples shall remain operational without the need to replace any component or portion of the alarm. These same alarms may be used in subsequent tests.

37.1.5 The accessory devices such as horns or lights employed for testing are to be those specified by the wiring diagram of the alarm. Substitute devices shall be used only if they produce functions and load conditions equivalent to those obtained with the devices intended to be used with the alarm in service.

37.2 Accessories

37.2.1 Accessories for use with single and multiple station carbon monoxide alarms are to be subjected – but not necessarily limited– to the following tests as applicable:

a) Normal Operation Test, Section 38;

b) Circuit Measurement Test, Section 39;

c) Temperature Test, Section 45;

d) Overload Test, Section 46;

e) Endurance Test, Section 47;

f) Variable Ambient Temperature Test, Section 48;

g) Humidity Test, Section 49;

h) Leakage Current Test, Section 50;

i) Transient Tests, Section 51;

j) Dielectric Voltage-Withstand Test, Section 54;

k) Overvoltage Test, Section 56;

l) Undervoltage Test, Section 57;

m) Jarring Test, Section 62;

n) Audibility Test, Section 65;

o) Tests of Thermoplastic Materials, Section 66; and

p) Drop Test, Section 73 (portable appliance only).

This document is only permissible for use by Mohamed Waheed of Bechtel Global Corporation. 8/26/2023 6:21:46 PM

Documents
Document Sharing Hub

ULSE INC. COPYRIGHTED MATERIAL – NOT AUTHORIZED FOR FURTHER REPRODUCTION OR DISTRIBUTION WITHOUT PERMISSION FROM ULSE INC.

Full document details: UL 2034 2023

37.3 Test voltages

37.3.1 Unless otherwise specified, the test voltage at rated frequency for each test is to be as follows:

Voltage, nameplate	Alarm rated test voltage
110 to 120	120
220 to 240	240
Other	Marked rating

37.3.2 The following samples are to be provided for testing:

a) At least 15 assembled alarms – fewer samples are permitted to be submitted for partial investigations based on a limited test program when agreed to by the testing agency,

b) One additional unassembled alarm,

c) Installation and Operating Instructions (see 89.1 and 89.2 and Section 88).

d) For alarms employing a battery as the main operating supply, 24 additional battery operated alarms for long term battery tests or equivalent test circuit set ups with appropriate measuring facilities to monitor the battery voltage, standby current, and alarm current. Each set up, if provided, shall be representative of six alarms and shall include test terminals and switches, limiting resistors, the alarm horn, and batteries. The value of resistors shall represent the normal standby current which would be obtained from a complete alarm.

37.3.3 The batteries shall be connected in the test circuit with the same terminal arrangement employed in the alarm. Provision for connection of the actual sounding appliance used in the alarm for random and weekly testing shall also be made. (See the Battery Tests, Section 64.)

37.4 Component reliability data

37.4.1 Data on alarm components, such as capacitors, resistors, solid state devices, and the like, shall be provided for evaluation of the reliability of the components for the intended application. If a Military Standard is referenced, a copy of the specification is to be provided for review.

37.4.2 The data required by 37.4.1 shall include the following or equivalent information:

a) Component and overall alarm reliability analysis per Military Standard 217F, described in 6.1.

b) Component vendor's reliability and life expectancy data. This includes failure rate data at rated values and derated values. The latter data is required only where the derating values form the basis of reliability.

c) General description of the alarm manufacturer's quality assurance (QA) program. This information shall include incoming inspection, in-process QA, burn-in data and testing. This applies to complete and partial assemblies as well as individual components.

d) Component Fault Analysis – Effect of failure, open and short, of capacitors and limited-life components on operation of an alarm.

e) Maximum vendor's ratings for each component as well as the actual maximum operating values (voltage and current) in the alarms.

This document is only permissible for use by Mohamed Waheed of Bechtel Global Corporation. 8/26/2023 6:21:46 PM

Documents
Document Sharing Hub

ULSE INC. COPYRIGHTED MATERIAL – NOT AUTHORIZED FOR FURTHER REPRODUCTION OR DISTRIBUTION WITHOUT PERMISSION FROM ULSE INC.

Full document details: UL 2034 2023

f) A description of component screening and burn-in test data for solid-state devices or integrated circuits which operate at greater than the limits described in note (b) of Table 45.1.

g) General calibration procedure of test instruments employed by the manufacturer in the calibration of an alarm.

h) A general description of the circuit operation under standby, alarm, and trouble conditions.

i) A description of the carbon monoxide test chamber, including drawings and operation procedure, to be used by a manufacturer in conducting the factory calibration tests.

38 Normal Operation Test

38.1 An alarm shall operate for all conditions of its intended performance, at all sensitivity settings, when energized from a source of rated voltage, under all conditions covered both in the installation instructions and in any supplementary information provided by the manufacturer.

38.2 The test voltage is to be in accordance with 37.3.1. The alarm is to be in the standby condition and prepared for its intended signaling operation when it is connected to related devices and circuits.

38.3 The maintenance of approximately 600 ppm of carbon monoxide in the alarm chamber shall result in the operation of the alarm in its intended manner for at least 12 hours.

38.4 A single station carbon monoxide alarm that employs a secondary power supply shall meet the requirements of this standard with the main power de-energized.

38.5 For multiple station configurations, the operation of one alarm shall result in the alarm signal of all connected alarms being energized and the alarm that initiated the alarm signal shall be identified. See 30.6.

38.6 Operation for alarm of a single-station carbon monoxide alarm with integral transmitter that is energized by an initial pulse(s) shall result in an alarm signal with a duration of at least 12 hours at a compatible receiving unit located at the maximum distance specified by the manufacturer, when tested under free-field conditions with no obstructions between the alarm transmitter and receiver units. Refer to 88.1(i) for instructions to be provided. A manual reset of the receiver is not required if the receiving unit audible alarm signal is energized in time sequence and duration with the alarm.

38.7 When a manual test switch is operated it shall cause all visual and audible indicators to be operated.

38.8 Any indicator of CO concentration shall be accurate to within plus or minus 30% of the indicated amount and display the gas concentration for all Sensitivity tests specified in Table 41.1 and pre/post Sensitivity tests within this standard. No indication shall be given for CO concentrations less than 30 ppm. The indicator shall comply with the in-service reliability requirements of 82.1.2. Testing shall be performed at 70, 150, and 400 ppm and the test data shall be part of the in-service reliability measurement program. For the purposes of these requirements, an indicator of CO concentration shall be either an integral component of a CO alarm or a remote indication provided at an external device, such as a remote receiver or a mobile device, i.e. smart phone.

This document is only permissible for use by Mohamed Waheed of Bechtel Global Corporation. 8/26/2023 6:21:46 PM

Documents
Document Sharing Hub
ULSE INC. COPYRIGHTED MATERIAL – NOT AUTHORIZED FOR FURTHER REPRODUCTION OR DISTRIBUTION WITHOUT PERMISSION FROM ULSE INC.
Full document details: UL 2034 2023

39 Circuit Measurement Test

39.1 Current input

39.1.1 Except for a battery operated alarm, the input current of a single or multiple station carbon monoxide alarm shall not exceed the marked rating by more than 10 percent when the alarm is connected to a source of supply in accordance with 37.3.1 and operated under the conditions of intended use (standby and alarm).

39.2 Battery trouble voltage determination

39.2.1 An increase in the internal resistance, or a decrease in terminal voltage, of a battery employed as the primary or secondary source of power to an alarm shall not impair operation for an alarm signal before a trouble signal is obtained. In addition, any combination of voltage and resistance at which a trouble signal is obtained shall be greater than the battery voltage and resistance combination measured over a 12 month period in the room ambient condition of the Battery Tests, Section 64.

39.2.2 The trouble level of a battery operated carbon monoxide alarm shall be determined (using the test circuit in Figure 39.1 and the voltage-resistance curves of Figure 39.2) for each of the following voltages:

a) Rated battery voltage,

b) Trouble level voltage (assuming minimal or no series resistance), and

c) Voltages between rated and trouble level voltage.

Figure 39.1

Test circuit

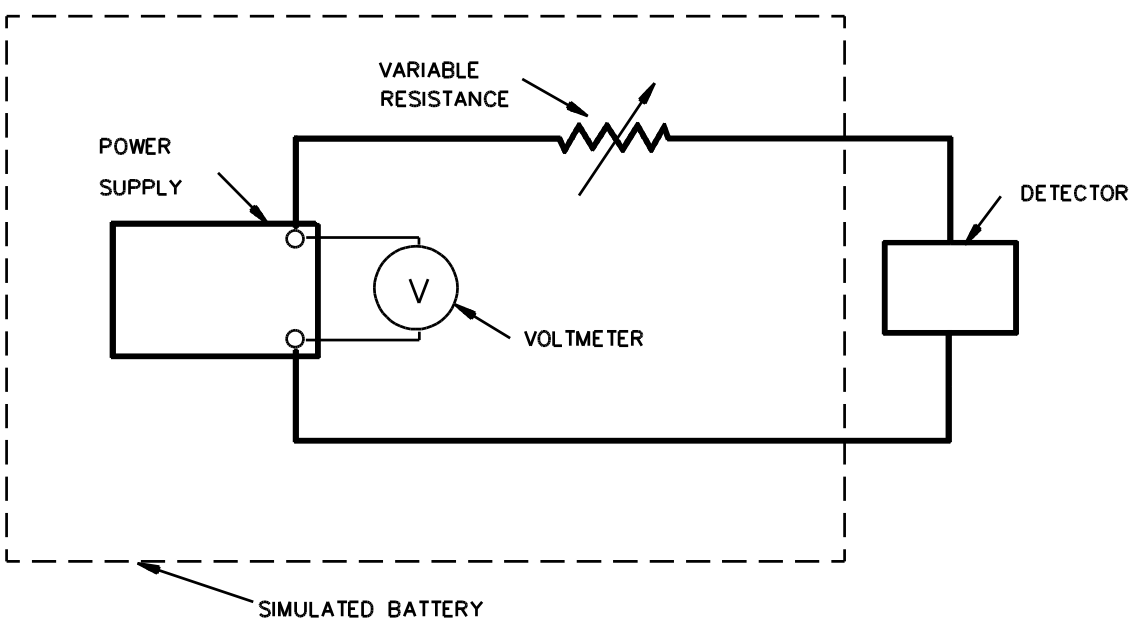

S2478

This document is only permissible for use by Mohamed Waheed of Bechtel Global Corporation. 8/26/2023 6:21:46 PM

ULSE INC. COPYRIGHTED MATERIAL – NOT AUTHORIZED FOR FURTHER REPRODUCTION OR DISTRIBUTION WITHOUT PERMISSION FROM ULSE INC.

Documents
Document Sharing Hub

Figure 39.2

Trouble level determination graph

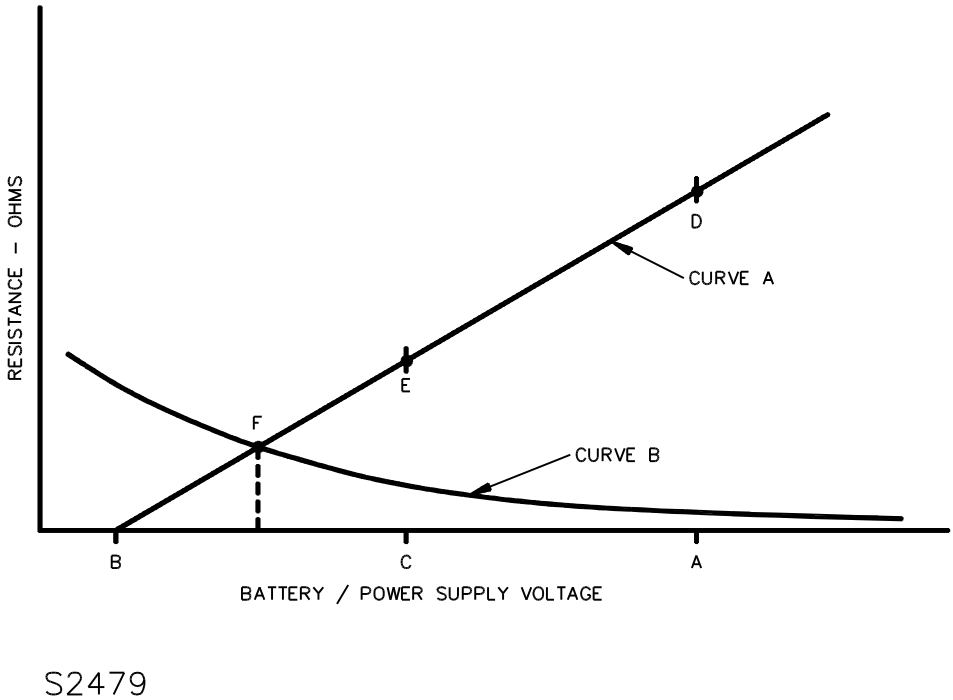

A – Rated battery voltage.

B – Trouble level voltage (assuming minimal resistance).

C – Voltage value between rated and trouble level.

D – Trouble level resistance at rated battery voltage.

E – Trouble level resistance at voltage value C.

F – Maximum permissible battery resistance and minimum voltage after 6 months in long-term battery test.

Curve A – Sample plot of voltage vs. resistance (alarm trouble level curve) at which a trouble signal in an alarm is obtained. Audibility measurement is to be made at points between D and F.

Curve B – Sample plot of battery internal resistance vs. battery open circuit voltage derived from long term (minimum 6 months) battery test. Shape and slope of curve, as well as point of intersection with Curve A, will vary depending on battery used.

This document is only permissible for use by Mohamed Waheed of Bechtel Global Corporation. 8/26/2023 6:21:46 PM

Documents
Document Sharing Hub
ULSE INC. COPYRIGHTED MATERIAL – NOT AUTHORIZED FOR FURTHER REPRODUCTION OR DISTRIBUTION WITHOUT PERMISSION FROM ULSE INC.
Full document details: UL 2034 2023

39.2.3 To determine compliance with 39.2.1 each of three alarms is to be connected in series with a variable regulated direct current power supply and a variable resistor as illustrated in Figure 39.1. The trouble level is to be determined by the following steps:

a) Rated Battery Voltage – The voltage of the power supply is to be set at the rated battery voltage and the series resistor at 0 ohms. The resistance is to be increased in increments of 0.1 – 10 ohms, at a rate of not more than one increment per minute, until a trouble signal is obtained. The alarm is to be tested for alarm operation at each resistance level and at the trouble signal level.

b) Trouble Level Voltage – With the variable resistor set at 0 ohms, the voltage of the power supply connected to the alarm is to be reduced in increments of 1/10 volt per minute to the level where the trouble signal is obtained. The alarm is to be tested for alarm operation at each voltage level and at the trouble signal level.

c) Voltage Values Between Rated and Trouble Level Voltages – The voltage of the power supply is to be set at preselected voltages between the rated battery voltage and the trouble level voltage. The series resistance is then to be increased in increments of 0.1 – 10 ohms, at a rate of not more than one increment per minute, until a trouble signal is obtained. The alarm is to be tested for alarm operation at each resistance and voltage level and at the trouble voltage level. A sufficient number of voltage values shall be selected to determine the shape of the trouble level curve.

39.2.4 To determine that a battery is capable of supplying alarm and trouble signal power to the alarm for at least 12 months under the room ambient condition described in the Battery Tests, Section 64, Curve A of Figure 39.2 is to be plotted from the data obtained in the measurements described in 39.2.3 and compared to Curve B of Figure 39.2, which is plotted from data generated in the 6 months battery test. The intersection of Curves A and B shall not occur before 12 months and all points of Curve B to the right of point F (extended to the base line), shall be below Curve A.

39.3 Battery trouble silence

39.3.1 The battery trouble signal from each of three alarms may be temporarily silenced until the battery capacity reaches the trouble level voltage-resistance points described in 39.2.2. The battery trouble signal must restore and no longer be capable of being silenced when the trouble level voltage-resistance points described in 39.2.2 have been reached.

40 Electrical Supervision Test

40.1 General

40.1.1 A carbon monoxide alarm shall be electrically supervised so that any of the following conditions which prevents operation for an alarm signal from the alarm device shall result in an audible trouble signal within 200 seconds of the occurrence of the fault:

a) An instantaneous failure or removal of a limited life component or a sensor,

Exception: The power source of a battery operated alarm.

b) An "open" in an externally connected alarm circuit, or

c) A ground fault in any externally connected wiring.

40.1.2 The wiring extending between alarms wired in a multiple station configuration shall be electrically supervised so that a short or multiple ground fault, which prevents operation for an alarm signal, shall result in an audible trouble signal or result in an alarm signal. An "open" in any of the wiring between alarms is not required to be indicated by a trouble signal if the operation as a single station alarm is not

This document is only permissible for use by Mohamed Waheed of Bechtel Global Corporation. 8/26/2023 6:21:46 PM

Documents
Document Sharing Hub
ULSE INC. COPYRIGHTED MATERIAL – NOT AUTHORIZED FOR FURTHER REPRODUCTION OR DISTRIBUTION WITHOUT PERMISSION FROM ULSE INC.
Full document details: UL 2034 2023

prevented. This requirement does not apply to the interconnected wiring of alarms intended to be connected by a Class 1 wiring method.

40.1.3 If an audible trouble signal is required to indicate a fault condition, it shall be produced every 30 – 60 seconds ±10 percent for a minimum of seven consecutive days. The trouble signal shall be distinctive from the alarm signal and, if provided, pre-alarm signal.

40.1.4 To determine if an alarm unit complies with the requirements for electrical supervision, the alarm is to be energized in the standby condition, and the type of fault to be detected is then to be introduced. Each fault shall be applied separately, the results noted and the fault removed. The alarm is then to be restored to the standby condition prior to establishing the next fault.

40.1.5 A fault condition (open, ground, or short), of other than the carbon monoxide alarm circuit of a carbon monoxide alarm with a noncarbon monoxide-alarm feature shall not prevent alarm signal operation as a carbon monoxide alarm. For this test the alarm is to be energized from a rated source of supply in the normal standby condition and the fault is to be applied. With the fault applied the alarm is then to be subjected to a carbon monoxide level of approximately 600 ppm which shall result in an audible alarm.

40.1.6 Units powered by electrical (AC) mains, or primary and/or secondary battery power source shall indicate end-of-life, based on the manufacturer's specified lifetime, with an end-of-life signal (see 5.12). It is permitted for the audible component of the signal to be of the same format as a trouble signal, provided a visual indicator is employed to differentiate between the end-of-life and other trouble conditions. The end-of-life signal shall repeat once every 30 – 60 seconds ±10 percent. This signal shall be triggered either by an internal timer or by a self-diagnostic test(s).

a) For a unit that employs a signal generated by an internal timer, once maximum specified lifetime is reached the end-of-life signal shall be initiated. The timer can be reset repeatedly, for a period not exceeding 72 hours for each period of reset, if self-diagnostic test(s) indicate that the unit still meets the requirements of this standard. The timer shall not be able to be reset after 30 days following the initial end-of-life signal. The manufacturer shall provide detailed documentation of the timer operation that includes, a description of how the timer data is affected by either short or long term removal of power to the alarm.

b) For a unit that employs a signal generated by a self-diagnostic test, once this test has determined the device no longer meets the requirements of this standard, the end-of-life signal shall be initiated.

c) If the sensor is automatically and periodically tested for response to CO (or an equivalent gas), then the unit's specified lifetime calculations can exclude the sensor component.

40.1.7 In addition to the requirements outlined in 40.1.6 a), b) and c), two alarms employing a replaceable battery or batteries shall be subject to the following requirements in the following order:

a) The alarm shall be configured to signal its end of life. The alarm shall then be reset once (if the alarm is capable of resetting the end-of-life signal).

b) If powered by AC mains or DC mains (Recreational Vehicle and/or Marine Use) the primary power shall first be disconnected prior to removing and installing the replacement battery.

c) The installed battery (original) shall be replaced with a new battery.

d) The new battery shall not be replaced within 15 minutes from removing the original battery. Manufacturer must provide detailed information that outlines the minimum amount of time needed to ensure that the residual power on the alarm has been depleted.

This document is only permissible for use by Mohamed Waheed of Bechtel Global Corporation. 8/26/2023 6:21:46 PM

Documents
Document Sharing Hub

ULSE INC. COPYRIGHTED MATERIAL – NOT AUTHORIZED FOR FURTHER REPRODUCTION OR DISTRIBUTION WITHOUT PERMISSION FROM ULSE INC.

Full document details: UL 2034 2023

e) After replacing the battery, the timer for the end-of-life signal shall not reset, and the timer shall continue from the cumulated end-of-life time which the battery was removed.

f) 40.1.7 a), b) and c) shall be re-conducted but with the battery replaced one day prior to the maximum end-of-life time period. A second alarm may be used for this requirement.

40.1.8 In addition to the requirements outlined in 40.1.6 (a), for an alarm that employs a replaceable battery but does not employ an end-of-life timer reset, the tests specified in clauses 40.1.7 (b), (c), (d), (e) and (f) shall be conducted with the battery being replaced on the first day that the end-of-life signal is generated and the last day following the time period that the unit is not reset as defined in 40.1.6 a).

40.2 AC powered units

40.2.1 Failure of an AC power source to an alarm shall be indicated by de-energization of a "power-on" lamp.

40.2.2 Neither loss nor restoration of power shall cause an alarm signal under either momentary or extended (at least 1/2 hour) power outage conditions. Momentary energization of the alarm circuit (maximum of 1 second), and energization of the trouble circuit (maximum of 2 minutes), is not considered an alarm signal. A gradual increase to 110 percent of rated voltage or reduction to 0 volts from rated voltage at a rate of not greater than 5 volts per minute shall not result in energization of the alarm (or pre-alarm) signal for more than 1 second.

40.2.3 Loss of power to a single unit of a multiple station alarm configuration, while energized in the standby condition, shall not result in a false alarm (or pre-alarm) and shall not prevent the operation of the remaining units for alarm.

40.3 Battery powered primary or secondary units

40.3.1 An alarm that uses a battery as the main source of supply shall be capable of producing an alarm signal for at least 12 hours at the battery voltage and/or current at which an audible trouble signal is obtained. Following the alarm signal the source of supply shall then be capable of providing 7 days of audible trouble signal indication. The trouble signal is to be produced every 30 – 60 ±10% seconds for seven consecutive days.

40.3.2 To determine compliance with 40.3.1, three samples shall be equipped with batteries which have been depleted to the trouble signal level. The samples are to be placed in alarm for 12 hours. After the 12 hours of alarm, the trouble signal shall persist for at least 7 consecutive days. A fresh battery is depleted by applying a 1 percent or smaller loading factor based on the ampere hour rating of the battery. For example, a 1000 milliampere-hour rated battery would be depleted by applying a 10 milliamperes (1 percent load) or less drain continuously until the battery voltage reaches the predetermined test level.

40.3.3 If a battery operated alarm locks-in on alarm, it shall automatically transfer from alarm to audible trouble when the battery voltage reaches the trouble signal level. If an alarm does not lock-in on alarm, automatic transfer from alarm to trouble is not required.

40.3.4 To determine compliance with 40.3.3, two samples of an alarm that locks-in on alarm shall be equipped with batteries which have been depleted and stabilized at just above the trouble signal level. The samples are then to be placed in alarm and the battery voltage monitored. The samples shall automatically transfer to audible trouble when the battery trouble voltage is reached. The trouble signal shall persist for seven consecutive days. If the battery voltage recovers to a point where the trouble signal is not longer emitted, the unit shall be placed into alarm again until the trouble signal is reinstituted.

This document is only permissible for use by Mohamed Waheed of Bechtel Global Corporation. 8/26/2023 6:21:46 PM

Documents
Document Sharing Hub

ULSE INC. COPYRIGHTED MATERIAL – NOT AUTHORIZED FOR FURTHER REPRODUCTION OR DISTRIBUTION WITHOUT PERMISSION FROM ULSE INC.

Full document details: UL 2034 2023

40.3.5 An alarm which uses a battery (or other applicable rechargeable energy storage media) as the secondary source of supply shall be capable of supplying the carbon monoxide alarm with a minimum of 24 hours of power in the normal standby condition. The carbon monoxide alarm shall be capable of producing an alarm signal for at least 12 hours at the battery voltage at which an audible trouble signal is obtained followed by 7 days of audible trouble signal indication.

40.3.6 To determine compliance with 40.3.5 for alarms whose secondary supply is a battery (or other applicable rechargeable energy storage media), three samples shall be powered from secondary sources of supply (with the primary source of supply disabled) which are fully charged, or in fresh condition (see 37.2, Secondary power supply) and allowed to remain in the normal standby condition for a minimum of 24 hours. The samples shall not emit audible low battery trouble signals before the end of the 24 hour period. Three samples shall also be equipped with secondary supplies (with the primary source of supply disabled) which have been depleted to the trouble signal level. The samples are then to be placed in alarm for 12 hours. Following the 12 hours of alarm the trouble signal shall persist for at least 7 consecutive days. It is possible to deplete a fresh battery by applying a 1 percent or smaller loading factor based on the ampere hour rating of the battery. For example, a 1000 milliampere-hour rated battery is depleted by applying a 10 milliampere (1 percent load) or less drain continuously until the battery voltage reaches the predetermined test level.

40.3.7 Primary power for commercial vehicles shall be provided by a permanently sealed, non-replaceable battery installed within the CO alarm and not from an external AC or DC source.

40.4 Component failure

40.4.1 If failure of a critical, limited life electronic component, such as opening or shorting of an electrolytic capacitor, is not indicated by an audible trouble or alarm signal, then a reliable component shall be used. The reliable component shall fall within the reliability prediction described in 5.8 and 5.9.

40.5 External wiring

40.5.1 An open or ground fault in the loop wiring connected from a single station carbon monoxide alarm to additional remote alarms that prevent operation for alarm signals from any of the interconnected alarms, shall not cause an alarm signal but shall result in an audible trouble signal. A short or double ground fault in the leads resulting in an audible trouble signal or an alarm signal is not prohibited.

40.5.2 An open, ground fault, or short in extra-low voltage circuit wiring among multiple station interconnected alarms or any wiring extending to a remote signaling device is not required to be indicated by a trouble signal if the fault does not prevent operation of any of the interconnected units as a single station alarm. A ground fault shall prevent operation for alarm only if the interconnected wiring is to be made in accordance with Class 1 requirements of the National Electrical Code, ANSI/NFPA 70, or the Canadian Electrical Code, Part I (CSA Standard C22.1). The installation wiring diagram shall indicate the type of connections to be employed.

40.5.3 An open, ground fault, or short in the extra-low voltage circuit conductors extending between the output of a separate power supply and an alarm, which prevents operation of the alarm, shall result in de-energization of the alarm "power-on" light.

41 Sensitivity Test

41.1 General

41.1.1 A carbon monoxide alarm shall operate (alarm signal) at or below the test points specified in Part A of Table 41.1 when using the test equipment described in 41.2.1. These test points are based on plotted limits for the 10 percent COHb curve Figure 41.1. If the alarm employs a variable sensitivity setting, test

This document is only permissible for use by Mohamed Waheed of Bechtel Global Corporation. 8/26/2023 6:21:46 PM

Document Sharing Hub
ULSE INC. COPYRIGHTED MATERIAL – NOT AUTHORIZED FOR FURTHER REPRODUCTION OR DISTRIBUTION WITHOUT PERMISSION FROM ULSE INC.
Full document details: UL 2034 2023

measurements are to be made at maximum and minimum settings. For this test, three carbon monoxide concentrations (70, 150, and 400 ppm) are to be used as specified in Part A of Table 41.1.

Figure 41.1

Carbon monoxide concentration (ppm CO) versus time (minutes)

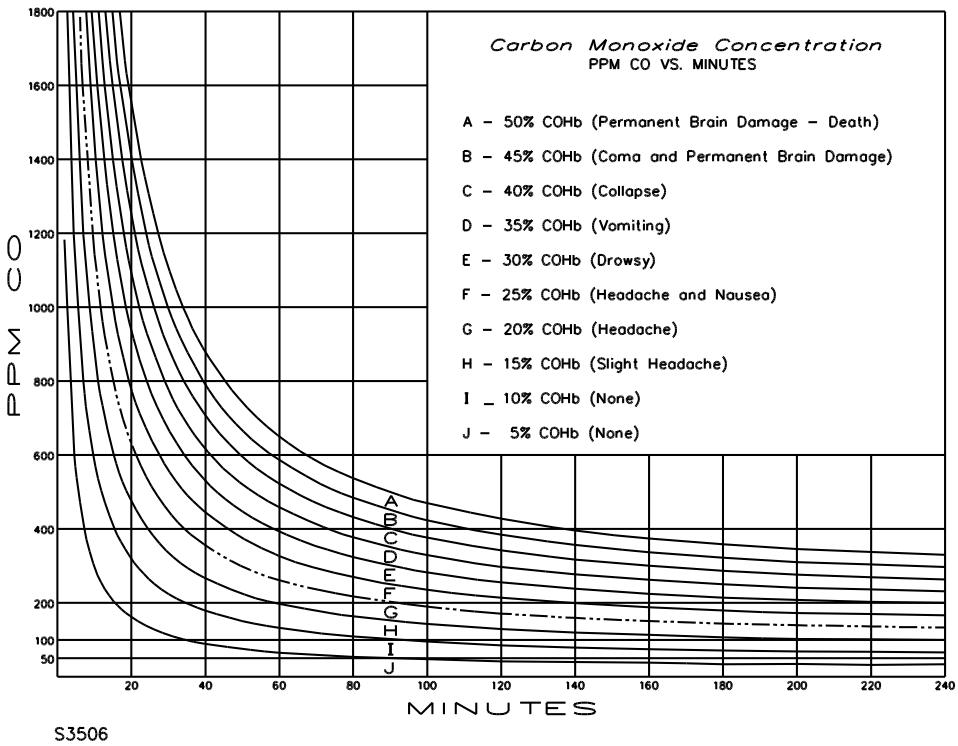

Equation For determining estimated percent COHb in blood[a]

$$\%COHb_t = \%COHb_0 \left[e^{-(t/2398B)}\right] + 218\left[1 - e^{-(t/2398B)}\right]\left[0.0003 + (\text{ppm CO}/1316)\right]$$

in which:

$\%COHb_t$ is the percentage of COHb at time t,

$\%COHb_0$ is the percentage of COHb in the blood at time 0,

t is the time in minutes, and

B is 0.0404 (heavy work effort).

[a] A proposal for evaluating human exposure to carbon monoxide contamination in military vehicles, Steinberg, Nielson, March 1977, AMCMS Code 672716.H700011; Coburn, R.F., Forster, R.E., & Kane, P.G. Considerations for the physiological variables that determine the blood carboxyhemoglobin concentration in man. Journal of Clinical Investigation, 1965, 44 1899-1910.

This document is only permissible for use by Mohamed Waheed of Bechtel Global Corporation. 8/26/2023 6:21:46 PM

Documents
Document Sharing Hub
ULSE INC. COPYRIGHTED MATERIAL – NOT AUTHORIZED FOR FURTHER REPRODUCTION OR DISTRIBUTION WITHOUT PERMISSION FROM ULSE INC.
Full document details: UL 2034 2023