UL 2075

STANDARD FOR SAFETY

Gas and Vapor Detectors and Sensors

Documents
Document Sharing Hub

Full document details: UL 2075 2023

Documents
Document Sharing Hub

Full document details: UL 2075 2023

UL Standard for Safety for Gas and Vapor Detectors and Sensors, UL 2075

Second Edition, Dated March 5, 2013

Summary of Topics

This revision to ANSI/UL 2075 dated January 23, 2023 was issued to incorporate the following changes:

– Unconditioned Areas; 1.1, 3.7, 3.16A, 45.2.1, and 50.1.1

– NFPA 720 Reference; 49.1.1

Text that has been changed in any manner or impacted by UL's electronic publishing system is marked with a vertical line in the margin.

The new and revised requirements are substantially in accordance with Proposal(s) on this subject dated September 6, 2022 and October 21, 2022.

All rights reserved. No part of this publication may be reproduced, stored in a retrieval system, or transmitted in any form by any means, electronic, mechanical photocopying, recording, or otherwise without prior permission of UL.

UL provides this Standard "as is" without warranty of any kind, either expressed or implied, including but not limited to, the implied warranties of merchantability or fitness for any purpose.

In no event will UL be liable for any special, incidental, consequential, indirect or similar damages, including loss of profits, lost savings, loss of data, or any other damages arising out of the use of or the inability to use this Standard, even if UL or an authorized UL representative has been advised of the possibility of such damage. In no event shall UL's liability for any damage ever exceed the price paid for this Standard, regardless of the form of the claim.

Users of the electronic versions of UL's Standards for Safety agree to defend, indemnify, and hold UL harmless from and against any loss, expense, liability, damage, claim, or judgment (including reasonable attorney's fees) resulting from any error or deviation introduced while purchaser is storing an electronic Standard on the purchaser's computer system.

Documents
Document Sharing Hub

Full document details: UL 2075 2023

No Text on This Page

Documents
Document Sharing Hub

Full document details: UL 2075 2023

MARCH 5, 2013
(Title Page Reprinted: January 23, 2023)

ANSI/UL 2075-2023

UL 2075

Standard for Gas and Vapor Detectors and Sensors

First Edition – November, 2004

Second Edition

March 5, 2013

This ANSI/UL Standard for Safety consists of the Second edition including revisions through January 23, 2023.

The most recent designation of ANSI/UL 2075 as an American National Standard (ANSI) occurred on January 23, 2023. ANSI approval for a standard does not include the Cover Page, Transmittal Pages, and Title Page. Any other portions of this ANSI/UL standard that were not processed in accordance with ANSI/UL requirements are noted at the beginning of the impacted sections.

Comments or proposals for revisions on any part of the Standard may be submitted to UL at any time. Proposals should be submitted via a Proposal Request in UL's On-Line Collaborative Standards Development System (CSDS) at https://csds.ul.com.

Our Standards for Safety are copyrighted by ULSE Inc. Neither a printed nor electronic copy of a Standard should be altered in any way. All of our Standards and all copyrights, ownerships, and rights regarding those Standards shall remain the sole and exclusive property of ULSE Inc.

COPYRIGHT © 2023 ULSE INC.

Documents
Document Sharing Hub

Full document details: UL 2075 2023

No Text on This Page

Documents
Document Sharing Hub

Full document details: UL 2075 2023

CONTENTS

INTRODUCTION

1 Scope 7
2 General 8
2.1 Components 8
2.2 Units of measurement 8
2.3 Undated references 8
3 Glossary 8
4 Alarm, Sensor and/or Detector Reliability Prediction 10
5 Installation and Operating Instructions 11
6 Compatibility 11

CONSTRUCTION

ASSEMBLY

7 General 12
7.1 Remote access 12
7.2 Sensitivity indicating means 12

ALL PRODUCTS

8 General 12
9 Enclosure 12
9.1 General 12
9.2 Metallic material 13
9.3 Polymeric materials 14
9.4 Sensitivity adjustment 14
9.5 Supplementary signaling feature 14
9.6 Sharp edges 15
9.7 Ventilating openings 15
9.8 Covers 15
9.9 Battery Removal Indicator 16
9.10 Transparent panels 16
9.11 Accessibility of uninsulated live parts, film-coated wire, and moving parts 17
10 Spacings 19
10.2 PCBA Clearance A (Equivalency) 20
10.3 PCBA Clearance B (Controlled Overvoltage) 21
10.4 Pollution degree 22
10.5 Switching test 23
11 Corrosion Protection 23

WIRING

12 Permanent Connection 23
12.1 General 23
12.2 Field-wiring compartment for hazardous voltage connection 23
12.3 Field-wiring terminals 23
12.4 Field-wiring leads 24
12.5 Grounded supply terminals and leads 24
12.6 Internal Wiring 24
12.7 Field-wiring connections (carbon monoxide detectors) 26

AVA Documents
Document Sharing Hub
Full document details: UL 2075 2023

13 Servicing Protection 27
13.1 General....27
13.2 Trained service personnel 27

PERFORMANCE

ALL PRODUCTS

14 General 27
15 Sensitivity requirements....28
15.6 Calibration 28
15.7 Test equipment....28
15.8 Selectivity 29
16 Sensitivity requirements....30
17 Electrical Supervision Test 30
17.1 General....30
17.2 AC powered units 31
17.3 Battery powered units 31
17.4 Component failure 32
17.5 External wiring....32
17.6 End-of-life signal....32
18 Strain Relief Tests 33
18.1 Cord-connected products 33
18.2 Field-connection leads 33
19 Circuit Measurement Test 34
19.1 Current input 34
19.2 Battery trouble voltage determination 34
20 Electric Shock Current Test 36
21 Overvoltage Test 39
22 Undervoltage Test 39
23 Drop Test....39
24 Dust Test 40
25 Static Discharge Test....40
26 Replacement Test, Head and Cover....41
27 Jarring Test 41
28 Flooding with Undiluted Gas Test....42
29 Variable Ambient Temperature Test 43
29.1 Operation in high and low ambient 43
29.2 Effect of shipping and storage....43
30 Humidity Testing 44
30.1 General 44
30.2 High humidity (non-condensing) test 44
30.3 Low humidity test....44
31 Leakage Current Test 44
32 Transient Tests....47
32.1 General....47
32.2 Supply line (hazardous-voltage) transients 47
32.3 Internally induced transients 49
32.4 Extraneous transients 49
32.5 Supply line (extra-low-voltage) circuit transients 50
33 Stability Tests....50
33.1 General....50
33.2 Air Velocity Variation 51
33.3 Pressure 51
33.4 One Year (minimum) Sensor Stability Test for Gas Sensors 51
34 Temperature Test 55

AVA Documents
Document Sharing Hub
Full document details: UL 2075 2023

35 Abnormal Operation Test 60
36 Overload Test 61
36.1 Control Panel, Detector or Alarm 61
36.2 Separately energized circuits 61
37 Endurance Test 61
38 Burnout Test 63
39 Power Supply Tests 64
40 Tests of Thermoplastic Materials 64
40.1 General 64
40.2 Accelerated air-oven aging test 65
40.3 Flame test (3/4 inch) 65
40.4 Flame test (5 inch) 66
41 Class 2 and Class 3 Power-Limited Circuits Test 67
41.1 General 67
41.2 Maximum voltage 70
41.3 Maximum current 71
42 Dielectric Voltage-Withstand Tests 71
43 Dielectric Voltage-Withstand Testing in lieu of measuring clearances 72
44 Mechanical Strength Tests for Metal Enclosures and Guards 73
45 Corrosion Tests 75
45.1 Corrosion Test – 21 Day 75
45.2 Corrosion (Salt Spray) Test 75
45.3 Corrosion Test (10 day) (Alternative to the 21 Day Test, See 45.1) 75
45.4 10 Day Corrosion – Test equipment 76
46 Vibration Tests 76
47 Battery Tests 77
47.8 Battery Replacement Test 78
47.9 Sensor Replacement Test 78
48 Audibility Test 78
48.1 General 78
48.2 Sound output measurement 79
48.3 Alarm duration test 79
48.4 Supplementary remote sounding appliances 80
49 Field Service Tests 80
49.1 Go/No-Go field test (carbon monoxide detectors) 80

MARKING AND INSTRUCTIONS

50 Marking 80
50.1 General 80
50.2 Permanence of marking 83
51 Installation Wiring Diagram 83

MANUFACTURING AND PRODUCTION TESTS

52 General 84
53 Sensitivity Calibration Tests 84
54 Measurement of In-Service Reliability 85
54.1 In-service reliability 85
54.2 Sample frequency and sample size 85
54.3 Test results and record keeping 86
55 Production Line Dielectric Voltage-Withstand Tests 86
56 Production Line Grounding Continuity Tests 87
57 Audibility Test 87
58 Alarm Shipment 87

AVA Documents
Document Sharing Hub
Full document details: UL 2075 2023

SUPPLEMENT SA – RELIABILITY AND FAILURE RATE DETERMINATION INFORMATION

GENERAL

SA1 Instructions for Determining a Reliability Prediction for Detectors, Sensors and/or Alarms 89
SA2 Methods of Determining Failure Rate 89
SA3 Maximum Alarm Failure Rates 98

CRITERIA FOR ACCEPTANCE OF MICROELECTRONIC DEVICES

SA4 General 99
SA5 Quality Assurance Screening Program 100
SA6 Determination of Failure Rate Number Supplemented by Burn-In Test 100
SA6.1 General 100
SA6.2 Determination sequence 100
SA6.3 Test calculations and procedures 102
SA6.4 Test conditions 103
SA6.5 Failure rate number calculation 103

Appendix – MANUFACTURING AND PRODUCTION TESTS

A1 Glossary 106
A2 UL REPRESENTATIVE'S DUTIES 106
A3 INSTRUCTIONS FOR FOLLOW-UP TESTS AT UL 109
A4 INSTRUCTIONS FOR TESTS AND/OR INSPECTION AT THE FACTORY 109

Documents
Document Sharing Hub
Full document details: UL 2075 2023

INTRODUCTION

1 Scope

1.1 This standard applies to fixed, portable and transportable toxic and combustible gas and vapor detectors and sensors intended for use in ordinary (non-hazardous) locations for use in indoor or unconditioned areas.

1.1A This standard covers gas and vapor detectors and sensors that are factory-calibrated and sealed with no means for recalibration or field maintenance by a qualified service personnel including:

a) A toxic gas sensor and/or detector with detection and/or alarm limits within the applicable Time Weighted Average (TWA) concentration, as specified by the National Institute for Occupational Safety and Health, or

b) A combustible gas detector with detection and/or alarm limits at or below 25% of the Lower of the Lower Explosive Limit (LEL),

c) A combustible gas sensor up to and including the LEL.

1.1B A gas detector and/or sensor and/or vapor detector, as covered by these requirements, consists of an assembly of electrical components coupled with a sensing means inside a chamber or by separate components to detect toxic and/or combustible gases or vapors and in accordance with National Electrical Code, NFPA 70, the Fire Alarm and Signaling Code, NFPA 72, and Fuel Gases and Warning Equipment, NFPA 715. The detector includes provision for the connection to a source of power and signaling circuits.

1.2 These requirements cover the following types of detectors:

a) Detectors intended for monitoring the environment and detectors intended for open area protection and for connection to a compatible power supply or control unit for operation as part of gas detection or emergency signaling systems;

b) Detectors intended solely for control of ventilation or shut off devices such as fans or control valves;

c) Detectors intended for both the above applications;

d) Sensors and sensing circuits intended for use with or in gas detectors, alarms or gas detection circuits within fuel cell systems;

e) Portable gas detectors;

f) Multi-gas gas detectors;

g) Multi-gas sensors.

1.3 These requirements also cover all remote accessories that are intended to be connected to a gas or vapor detector and/or sensor.

1.4 This standard does not cover the following:

a) Control units to which the detectors are intended to be connected that are covered by the Standard for Control Units for Fire-Protective Signaling Systems, UL 864;

b) Control units to which the detectors are intended to be connected that are covered by the Standard for General Purpose Signaling Devices and Systems, UL 2017;

AVA Documents
Document Sharing Hub
Full document details: UL 2075 2023

c) Self-contained single and multiple station carbon monoxide alarms or residential combustible gas detectors, not intended for connection to a system control unit, that are covered by the Standard for Single and Multiple Station Carbon Monoxide Alarms, UL 2034 or Residential Gas Detectors, UL 1484;

d) Automatic flammable vapor sensor systems and components covered by the Standard for Automatic Flammable Vapor Sensor Systems and Components, Z21.94/CSA 6.3;

e) Equipment intended for use in hazardous (classified) locations.

1.5 Users of these requirements will additionally need to ensure that influencing factors not addressed in this standard for the end product installation, such as mechanical movement, field placement of conductive material, and product damage, will not affect the system for insulation coordination or performance operation. Examples are the deformation of the enclosure, movement of the fittings for conduit or armored cable, or the improper installation of field wiring.

2 General

2.1 Components

2.1.1 Except as indicated in 2.1.2, a component of a product covered by this standard shall comply with the requirements for that component.

2.1.2 A component is not required to comply with a specific requirement that:

a) Involves a feature or characteristic not required in the application of the component in the product covered by this standard, or

b) Is superseded by a requirement in this standard.

2.1.3 A component shall be used in accordance with its rating established for the intended conditions of use.

2.1.4 Specific components are incomplete in construction features or restricted in performance capabilities. Such components are intended for use only under limited conditions, such as certain temperatures not exceeding specified limits, and shall be used only under those specific conditions.

2.2 Units of measurement

2.2.1 Values stated without parentheses are the requirement. Values in parentheses are explanatory or approximate information.

2.3 Undated references

2.3.1 Any undated reference to a code or standard appearing in the requirements of this standard shall be interpreted as referring to the latest edition of that code or standard.

3 Glossary

3.1 For the purpose of this standard the following definitions apply.

3.2 ALARM SIGNAL – A signal intended to indicate an emergency condition.

Documents
Document Sharing Hub
Full document details: UL 2075 2023

3.3 ALARM VERIFICATION – The process that confirms the presence of an abnormal concentration of a gas vapor for a predetermined period before an alarm signal is indicated.

3.4 COMPONENT, LIMITED-LIFE – A component that is expected to fail and be periodically replaced and the failure of which is supervised, when failure of the component affects the intended operation, sensitivity, or both. Typical examples of such components include incandescent lamps, electronic tube heaters, and functional heating elements.

3.5 COMPONENT, RELIABLE – A component that is not expected to fail or be periodically replaced and is not supervised. A reliable component shall have a predicted failure rate of 2.5 or less failures per million hours as determined for "Ground Fixed" (GF) environment by MIL-HDBK 217F, or equivalent.

3.5.1 END-OF-LIFE SIGNAL – A trouble signal at the control panel or remote display and/or indication on the detector, identifying the specific trouble condition intended to annunciate the device or a component has reached the end of its useful life and should be replaced.

3.6 GAS OR VAPOR DETECTOR, TWO-WIRE TYPE – A detector that signals over, and obtains its power from, the initiating device circuit of an emergency system control unit. It is not prohibited to provide additional terminals or leads for annunciation or control of supplementary functions. This may be referred to as an alarm and/or detector throughout this Standard.

3.7 *Deleted*

3.8 LOWER EXPLOSIVE LIMIT (LEL) – Volume ratio of flammable gas or vapor in air below which an explosive gas atmosphere does not form, expressed as a percentage.

3.9 MANUFACTURER'S TEST PROGRAM – The tests described in Section 52 through Section 58, Manufacturing and Production Tests, of this standard are to be conducted by the manufacturer on a periodic or 100 percent basis.

3.10 OPEN PATH DETECTOR – An apparatus for the detection and measurement of combustible or toxic gases or vapors in ambient air by measuring the spectral absorption associated with the gases or vapors over extended optical paths, ranging typically from one meter to a few kilometers.

The apparatus can measure the integral concentration of the absorbing gas over the optical path in units such as LEL meter for combustible gases and ppm meter for toxic gases.

3.11 PPM – Gas concentration in parts per million. Ten thousand parts per million is equivalent to 1 percent gas by volume.

3.11A QUALIFIED SERVICE PERSONNEL – A person that has been trained by the manufacturer or representative of the manufacturer to perform field maintenance and/or service that would be considered acceptable to the authority having jurisdiction.

3.12 RISK OF ELECTRIC SHOCK – A risk of electric shock exists at any part when:

a) The potential between the part and earth ground or any other accessible part is more than 42.4 volts peak, and

b) The continuous current flow through a 1500-ohm resistor connected across the potential exceeds 0.5 milliampere.

3.13 RISK OF FIRE – A risk of fire exists at any point in a circuit where:

Documents
Document Sharing Hub
Full document details: UL 2075 2023

a) The open circuit voltage is more than 42.4 volts peak and the energy available to the circuit under any condition of load, including short circuit, results in a current of 8 amperes or more after 1 minute of operation, or

b) A power of more than 15 watts shall only be delivered in an external resistor connected between the two points.

3.14 SENSITIVITY – Relative degree of response of a detector alarm or sensor. A high sensitivity denotes response to a lower concentration of gas or vapor than a low sensitivity under identical conditions.

3.15 SENSOR The component or combination of components of the detector/alarm that responds to and in turn provides a usable output signal in the presence of a combustible and/or toxic gas.

3.16 TROUBLE SIGNAL – A visible or audible signal intended to indicate a fault or trouble condition, such as an open or shorted condition of a component in the device or an open or ground condition in the connected wiring. The signal is indicated at the control unit to which the detector is connected.

3.16A UNCONDITIONED AREA – Partially or fully enclosed spaces without continuous climate controls where devices are not in direct contact with elements of weather and where an individual spends time (Examples include parking garages, attached garages, crawl spaces and attics associated with a family living unit, cottages and cabins, barns, etc.)

3.17 VOLTAGE CLASSIFICATION – Unless otherwise indicated, all voltage and current values specified in this standard are root-mean-square (rms).

a) Low-Voltage Circuit – A circuit classified as low-voltage is one involving a potential of not more than 30 volts alternating current (ac) [42.4 volts peak or direct-current (dc)], and supplied from a circuit whose power is limited to a maximum of 100 volt-amperes (VA).

b) High-Voltage Circuit – A circuit classified as high-voltage is one having circuit characteristics in excess of those of a low-voltage circuit.

4 Alarm, Sensor and/or Detector Reliability Prediction

4.1 The maximum failure rate for an alarm, detector assembly or circuit shall be 4.0 failures per million hours as calculated by a full part stress analysis prediction as described in Section 2.0 of MIL-HDBK 217F (December 2, 1991) or 3.5 failures per million hours as calculated by a simplified parts count reliability prediction as described in Appendix A of MIL-HDBK 217F, or equivalent. A "Ground Fixed" (GF) environment is to be used for all calculations. When actual equivalent data is available from the manufacturer it is not prohibited that it be used in lieu of the projected data for the purpose of determining reliability.

4.2 The maximum failure rate for a sensor or individual component is 2.5 failures per million hours as calculated by a full part stress analysis prediction as described in Section 3.4 of MIL-HDBK 217F (December 2, 1991) or equivalent. A "Ground Fixed" (GF) environment is to be used for all calculations. When actual equivalent data is available from the manufacturer it is not prohibited that it be used in lieu of the projected data for the purpose of determining reliability.

4.3 Any component whose failure:

a) Results in energization of an audible trouble signal, energization of a separate visual indication, or de-energization of a power-on light;

b) Does not effect the normal operation or sensitivity; or

Documents
Document Sharing Hub
Full document details: UL 2075 2023

c) Is evaluated by specific performance tests included in the standard;
is not required to be included in the failure rate calculation. Examples include the audible signal appliance, non-compulsory thermostat, test switch, and battery contacts.

4.4 An integral or remote accessory, such as an integral transmitter or remote sounding appliance, is not required to be included in the reliability prediction except for those components whose failure affects the normal operation of the detector.

4.5 A custom integrated circuit (CHIP) employed in an alarm shall have a predicted failure rate of not greater than 2.5 failures per million hours. The failure rate is to be determined through an evaluation of data in a 3000-hour burn-in test, or equivalent. (See Supplement SA for information on evaluation methods.)

4.6 A sensor, or a sensing component supervision system, shall be provided with the following:

a) Reliability data developed using the Military Standardization Handbook, MIL 217-F or equivalent demonstrating a predicted failure rate of not more than 2.5 failures per million hours operation (see 4.4); or

b) Supervision of the predicted failure modes other than for loss of electrical continuity. Documentation of the failure modes resulting from aging for the sensor or the sensing components and identification of failure modes addressed by the supervision system shall be provided. The manufacturer shall submit a test method to render the sensor unresponsive to the gas concentrations identified in Section 15 if the documentation submitted for the sensor or the sensing components indicates drift in the less sensitive direction. This method shall be used when conducting the Electrical Supervision Test, Section 17. All predicted failure modes shall result in a trouble signal; or

c) Supervision of the sensor drift beyond 5% of the predicted operating range.

5 Installation and Operating Instructions

5.1 A copy of the installation and operating instructions and related schematic wiring diagrams and installation drawings, shall be used as a reference in the examination and test of the detector.

5.2 The instructions and drawings shall include such directions and information as deemed by the manufacturer to be required for proper installation, testing, maintenance, operation, and use of the detector.

6 Compatibility

6.1 The interconnection of the product with other products shall be evaluated for the purpose of operating as a coordinated system relative to the intended alarm signaling and without risk of fire, shock, or injury to persons.

6.2 The requirements in 6.1 apply to:

a) Separate products connected to any circuit and by which the operating parts of the product are actuated for signaling and/or action and

b) Separate or incorporated appliances or units by which signals are indicated or actions carried out.

6.3 Power circuits interconnecting products shall have compatible voltage and current ratings.

AVA Documents
Document Sharing Hub
Full document details: UL 2075 2023

6.4 All equipment directly connected to the product shall be evaluated for the application.

CONSTRUCTION

ASSEMBLY

7 General

7.1 Remote access

7.1.1 Unless specifically indicated otherwise the construction requirements specified for a gas or vapor detector shall also apply for any remote accessories with which it is to be employed.

7.2 Sensitivity indicating means

7.2.1 Each alarm or detector shall be provided with a means for measuring or indicating the nominal sensitivity or sensitivity range of the detector as described in 7.2.2, or a sensitivity test feature as described in 7.2.3, after it has been installed as intended. Removal of a snap-on cover to gain access to the sensitivity control is permissible only when no high-voltage parts are exposed or able to be contacted by the user.

7.2.2 The test feature is to verify that the sensitivity of the detector is within its marked range. Unless it is employed on a detector that has other means of measuring its sensitivity, the test feature shall consist of either an electrical means or a mechanical device which simulates a specified level of gas at the sensor.

7.2.3 A detector that incorporates a variable sensitivity setting intended to be field adjusted shall have a mechanical stop on the adjusting means for the maximum and minimum settings.

ALL PRODUCTS

8 General

8.1 A product shall use materials that have been determined to comply with the requirements for the particular use, as indicated by the performance requirements of this standard.

8.2 Metals shall not be used in such combination as to cause galvanic action that increases the risk of fire, electric shock, injury to persons, or impairs the operation of a product associated with the safety of life and/or the protection of property.

8.3 When breakage or deterioration of a part such as an enclosure, frame, or guard, results in a risk of injury to persons, then the part shall be constructed to meet the demand or expected loading conditions.

8.4 The requirement in 8.3 also applies to those positions of a part adjacent to a moving part identified to involve a risk of injury to persons.

9 Enclosure

9.1 General

9.1.1 All electrical parts of a product shall be enclosed to provide protection of internal components and prevent contact with uninsulated live parts.

Documents
Document Sharing Hub
Full document details: UL 2075 2023

9.1.2 Enclosures shall have the strength and rigidity to resist the abuses to which the product is likely to be subjected during intended use without increasing the risk of fire, electrical shock, or injury to persons.

9.2 Metallic material

9.2.1 An enclosure of metal shall have dimensions as specified in Table 9.1, Table 9.2, or Table 9.3 or shall comply with the test requirements in Mechanical Strength Tests for Metal Enclosures and Guards, Section 43.

Table 9.1
Cast-metal electrical enclosures

Use or dimensions of area involved [a]	Minimum thickness			
	Die-cast metal,		Cast metal other than die-cast,	
	Inch	(mm)	Inch	(mm)
Area of 24 square inches (155 square cm) or less and having no two dimensions greater than 6 inches (152 mm)	1/16 [a]	1.6 [a]	1/8	3.2
Area greater than 24 square inches (155 square cm) or having any two dimensions greater than 6 inches (152 mm)	3/32	2.4	1/8	3.2
At threaded conduit hole	1/4	6.4	1/4	6.4
At unthreaded conduit hole	1/8	3.2	1/8	3.2

[a] The area limitation for metal 1/16 inch (1.6 mm) in thickness shall be obtained by the provision of reinforcing ribs subdividing a larger area.

9.2.2 When threads for the connection of conduit are tapped all the way through a hole in an enclosure wall, or when a construction that is determined to be the equivalent is used, there shall not be less than 3-1/2 nor more than 5 threads in the metal, and the construction shall be such that a standard conduit bushing is capable of being attached.

9.2.3 When threads for the connection of conduit are tapped only part of the way through a hole in an enclosure wall, there shall not be less than five full threads in the metal. There shall be a smooth, rounded inlet hole for the conductors which shall provide protection to the conductors determined to be the equivalent to that provided by a standard conduit bushing.

9.2.4 At any point where conduit or metal-clad cable is attached to the enclosure the sheet metal shall be a minimum of 0.032 inch (0.81 mm) thick, or shall be formed or reinforced so that it shall have the minimum stiffness of an uncoated flat sheet of steel.

9.2.5 With reference to Table 9.1 a supporting frame is a structure of angle or channel or a folded rigid section of sheet metal which is rigidly attached to and has essentially the same outside dimensions as the enclosure surface and which has sufficient torsional rigidity to resist the bending moments which may be applied via the enclosure surface when it is deflected. Construction that is considered to have equivalent reinforcing may be accomplished by designs that will produce a structure which is as rigid as one built with a frame of angles or channels. Construction considered to be without supporting frame includes:

a) Single sheet with single formed flanges (formed edges),

b) A single sheet which is corrugated or ribbed, and

c) An enclosure surface loosely attached to a frame, for example, with spring clips.

AVA Documents
Document Sharing Hub
Full document details: UL 2075 2023

9.3 Polymeric materials

9.3.1 Polymeric materials used as an enclosure shall comply with the applicable portion of the Standard for Polymeric Materials – Use in Electrical Equipment Evaluations, UL 746C, and also with the additional requirements specified in this standard.

9.3.2 Polymeric material that is not used as an enclosure, but is attached to or exposed on the outside of a product, such as a viewing window, shall have flammability characteristics as shown in Table 9.2.

Table 9.2
Flammability characteristics of polymeric material

Polymeric material area/dimensions	Flammability rating
0.24 inches ^{3} (4 cm^3) and 2.4 inches (61 mm) maximum length	None
Greater than 0.24 inches ^{3} (4 cm^3) and less than 2 square feet (0.19 m^2), 6 feet (1.83 m) maximum length	HB, V-2, V-1, V-0 or 5V
Greater than 2 square feet (0.19 m^2) and less than 10 square feet (0.93 m^2), 6 feet (1.83 m) maximum length	V-1, V-0 or 5V
Greater than 10 square feet (0.93 m^2), or longer than 6 feet (1.83 m)	Maximum flame spread rating of 200 as specified in the Standard for Test for Surface Burning Characteristics of Building Materials, UL 723 or radiant panel as specified in the Standard for Tests for Flammability of Plastic Materials for Parts in Devices and Appliances, UL 94.

9.3.3 Conductive coatings applied to nonmetallic surfaces, such as the inside surface of an enclosure, shall comply with the appropriate requirements in the Standard for Polymeric Materials – Use in Electrical Equipment Evaluations, UL 746C, unless flaking or peeling of the coating does not result in the reduction of spacings or the bridging of live parts.

9.3.4 A polymeric enclosure intended for connection to a rigid metallic conduit system shall comply with the requirements for polymeric enclosure rigid metallic conduit connections in the Standard for Enclosures for Electrical Equipment, UL 50.

9.3.5 The continuity of a conduit system shall be provided by metal-to-metal contact and not rely on a polymeric material and shall comply with the requirements for polymeric enclosure bonding in the Standard for Enclosures for Electrical Equipment, UL 50.

9.4 Sensitivity adjustment

9.4.1 A field sensitivity adjustment, when provided, shall be accessible with the sensor detector or alarm installed as intended, marked to indicate the direction of sensitivity (high or low), and shall employ a mechanical stop at both extremes. Removal of a snap-on cover to gain access to the sensitivity control is permissible only when no hazardous voltage parts are able to be contacted by the user. Adjustment extremes shall not exceed the values specified by the manufacturers operating range for the unit.

9.5 Supplementary signaling feature

9.5.1 A supplementary signaling feature, such as a transmitter for remote signaling, included integrally with the device, shall be evaluated to the applicable requirements and determined suitable for it's intended application.

Documents
Document Sharing Hub
Full document details: UL 2075 2023

9.6 Sharp edges

9.6.1 An edge, projection, or corner of an enclosure, opening, frame, guard, knob, handle, or similar part shall be rounded so as not to result in a cut-type injury when contacted during use or user maintenance.

9.7 Ventilating openings

9.7.1 Ventilating openings in an enclosure for hazardous-voltage circuits, including perforated holes, louvers, and openings protected by means of wire screening, expanded metal, or perforated covers, shall be of such size or shape that no opening will permit passage of a rod having a diameter of 9/64 inch (3.6 mm). An enclosure for a fuse(s) or other overload protective device provided with ventilating openings, shall afford protection against the emission of flame or molten metal. Openings provided to permit cleaning, or openings which may be used to clean internal parts, shall be constructed to reduce the risk of damage to functional internal components during such cleaning operations.

9.7.2 Except as noted in 9.7.3, perforated sheet metal employed for expanded metal mesh shall not be less than 0.042 inch (1.07 mm) in average thickness [0.046 inch (1.17 mm) when zinc coated].

9.7.3 Expanded metal mesh 0.021 inch (0.53 mm) thick, or zinc coated perforated sheet metal 0.024 inch (0.61 mm) thick, shall be used only when the following conditions are met:

a) The indentation of the guard or enclosure does not alter the clearance between uninsulated live parts and grounded metal so as to reduce the spacings below the minimum values required; and either

b) The exposed mesh on any one side or surface of the product has an area of not more than 72 square inches (465 cm^2) with no dimension greater than 12 inches (305 mm) or

c) The width of an opening so protected is not more than 3-1/2 inches (88.9 mm).

9.7.4 The wire forming a screen protecting hazardous-voltage parts shall not be smaller than 16 AWG (1.3 mm^2) and the screen openings shall not be greater than 1/2 square inch (3.2 cm^2).

9.8 Covers

9.8.1 An enclosure cover shall be hinged, sliding, pivoted, or similarly attached when:

a) It provides ready access to fuses or any other overcurrent protective device requiring renewal or

b) It is necessary to open the cover periodically in connection with the intended operation of the detector.

For the purpose of this requirement intended operation is considered to be operation of a switch for testing or operation of any other component of the device that requires such action in connection with its intended performance. This requirement does not apply to the battery replacement aspect of a device employing a battery as either the main or standby power supply.

9.8.2 A cover that is intended to be removed only for periodic maintenance shall be secured by any one of the following or equivalent means: positive snap catch, plug-in or twist action, snap tab with one screw, or two or more screws.

9.8.3 When a cover is not intended to be removed for cleaning or maintenance, and the device is intended to be returned to the factory for servicing, the cover shall be secured so that it is not readily removed. Exposed screw slots or nuts, other than a tamper-proof type, shall be sealed or covered.

AVA Documents
Document Sharing Hub

Full document details: UL 2075 2023

Exception: These requirements do not apply if the alarm cover is intended to be removed for cleaning, maintenance, or both, even though the alarm is intended to be returned to the manufacturer for servicing.

9.8.4 A hinged cover is not required where the only fuse(s) enclosed is intended to provide protection to portions of internal circuits, such as may be employed on a separate printed-wiring board or circuit subassembly, to prevent circuit damage resulting form a fault. Such a fuse(s) shall only be used when the word "CAUTION" and the following, or equivalent marking is located on the cover of a device employing hazardous-voltage circuits: "Circuit Fuse(s) Inside – Disconnect Power Prior to Servicing".

9.8.5 A hinged cover shall be provided with a latch, screw, or catch to hold it closed. An unhinged cover shall be securely held in place by screws or a means determined to be equivalent.

9.9 Battery Removal Indicator

9.9.1 Removal of a battery from a battery-operated gas detector or alarm shall result in a readily apparent and prominent visual indication. The visual indication shall consist of:

a) A warning flag that will be exposed with the battery removed and the cover closed,

b) A hinged cover that cannot be closed with the battery removed, or

c) An equivalent arrangement.

9.9.2 If a warning flag, or equivalent, is employed to comply with the requirement of 9.9.1, it shall be marked as required in 50.1.1 (k).

9.10 Transparent panels

9.10.1 Glass covering an enclosure opening shall be held securely in place so that it does not displace in service and shall provide mechanical protection of the enclosed parts. The thickness of a glass cover shall not be less than that indicated in Table 9.3.

Table 9.3
Thickness of glass covers

Maximum size of opening				Minimum thickness,	
Length or width,		Area,			
inches	(mm)	inches	(cm^2)	inch	(mm)
4	102	16	103	1/16	1.6
12	305	144	929	1/8	3.2
Over 12	Over 305	Over 144	Over 929	See footnote [a]	

[a] Minimum thickness shall be 1/8 inch (3.2 mm) or more, depending upon the size, shape, and mounting of the glass panel. A glass panel for an opening having an area of more than 144 square inches (929 cm^2), or having any dimension greater than 12 inches (305 mm), shall be supported by a continuous groove not less than 3/16 inch (4.8 mm) deep along all four edges of the panel.

9.10.2 A transparent material other than glass employed as a cover over an opening in an enclosure shall:

a) Be mechanically equivalent to glass,

b) Not distort, and

Documents
Document Sharing Hub
Full document details: UL 2075 2023

c) Not become less transparent at the temperature to which it is subjected under normal service conditions.

9.10.3 A lens, light filter, or similar part of a gas or vapor detector shall be constructed of a material whose transparency will not be diminished by the conditions to which it will be exposed in service, as represented by the performance tests of this Standard.

9.11 Accessibility of uninsulated live parts, film-coated wire, and moving parts

9.11.1 To reduce the risk of unintentional contact and risk of electric shock from an uninsulated live part or film-coated wire, and injury to persons from a moving part, an opening in an enclosure shall have a minor dimension less than 1 inch (25.4 mm), and such a part or wire shall not be contacted by the probe illustrated in Figure 9.1.

Documents
Document Sharing Hub
Full document details: UL 2075 2023

Figure 9.1

Articulated probe

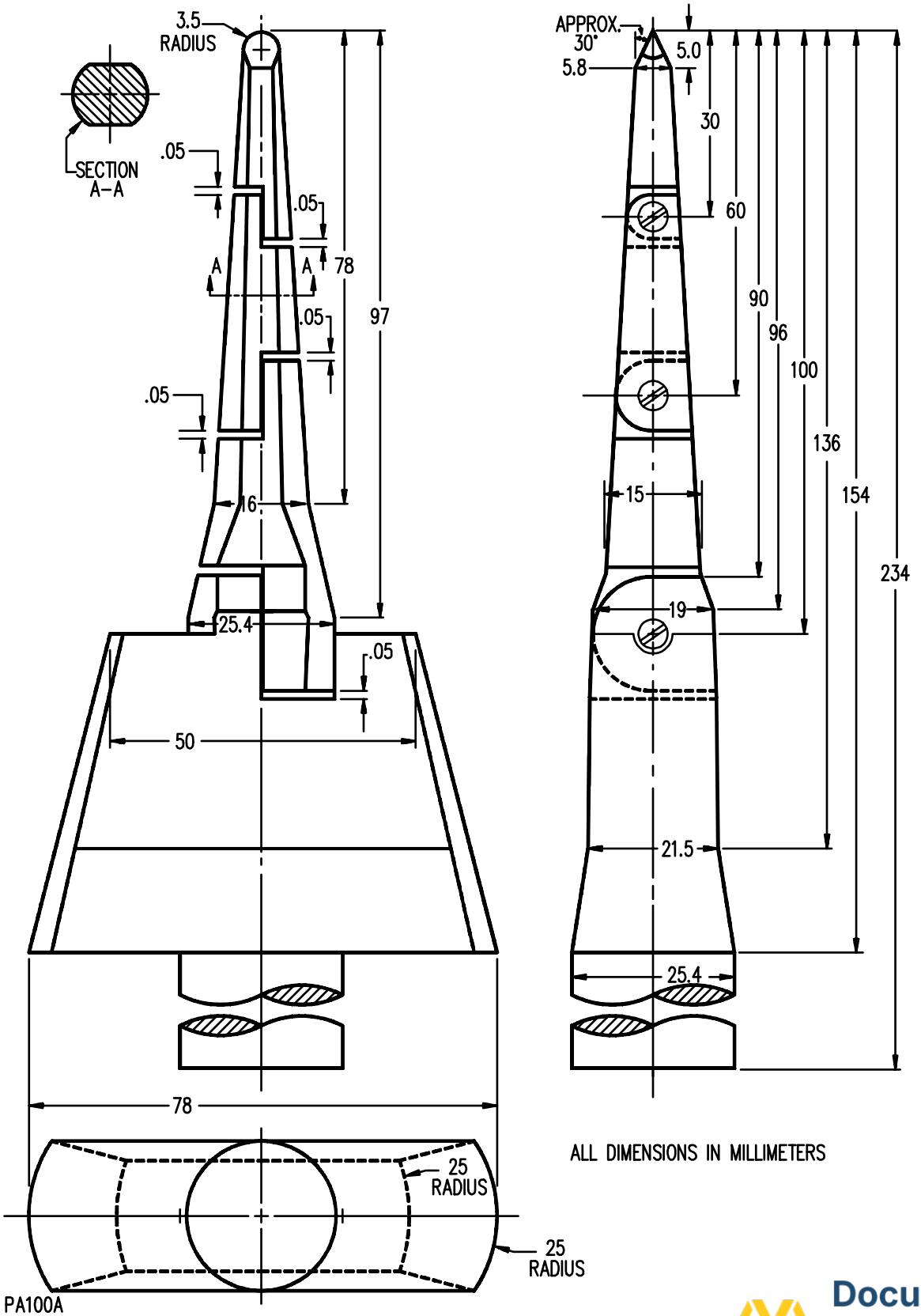

Documents
Document Sharing Hub
Full document details: UL 2075 2023

9.11.2 The probe mentioned in 9.11.1 shall be applied to any depth that the opening will permit. The probe shall be rotated or angled before, during, and after insertion through the opening to any position that is required in order to examine the enclosure. The probe illustrated in Figure 9.1 shall be applied in any possible configuration and, when necessary, the configuration shall be changed after insertion through the opening.

9.11.3 The probe mentioned in 9.11.1 shall be used as a measuring instrument to evaluate the accessibility provided by an opening, and not as an instrument to evaluate the strength of a material. It shall be applied with the minimum force required to determine accessibility.

9.11.4 During the examination of a product to determine whether it complies with the requirement in 9.11.1, a part of the enclosure that is to be opened or removed by the operator without using a tool (to attach an accessory, to make an operating adjustment, or for other reasons) shall be opened or removed.

10 Spacings

10.1 A product shall provide maintained spacings between uninsulated live parts and the enclosure or dead metal parts, and between uninsulated live parts of opposite polarity. The spacings shall not be less than those indicated in Table 10.1.

Table 10.1
Minimum spacings

Point of application	Minimum spacings				
	Voltage range,	Through air,		Over surface,	
	volts	inch	(mm)	inch	(mm)
To walls of enclosure					
Cast metal enclosures	0 – 300	1/4	6.4	1/4	6.4
Sheet metal enclosures	0 – 50	1/4	6.4	1/4	6.4
	51 – 300	1/2	12.7	1/2	12.7
Installation wiring terminals:					
(General application)[a,b]	0 – 30	3/16	4.8	3/16	4.8
	31 – 150	1/4	6.4	1/4	6.4
	151 – 300	1/4	6.4	3/8	9.5
Installation wiring, except solder-type terminals	0 – 30	1/8	3.2	1/8	3.2
	31 – 150	3/16	4.8	3/16	4.8
	151 – 300	1/4	6.4	1/4	6.4
Rigidly clamped assemblies [c]					
100 volt-amperes maximum	0 – 30	1/32[d]	0.8[d]	1/32[d]	0.8[d]
	0 – 30	3/64	1.2	3/64	1.2
	31 – 150	1/16	1.6	1/16	1.6
	151 – 300	3/32	2.4	3/32	2.4
Other parts	0 – 30	1/16	1.6	1/16	1.6
	31 – 150	1/8	3.2	1/4	6.4

Table 10.1 Continued on Next Page

Documents
Document Sharing Hub
Full document details: UL 2075 2023

Table 10.1 Continued

Point of application	Minimum spacings				
	Voltage range,	Through air,		Over surface,	
	volts	inch	(mm)	inch	(mm)
	151 – 300	1/4	6.4	3/8	9.5

[a] Measurements are to be made with solid wire of adequate ampacity for the applied load connected to each terminal. In no case shall the wire be smaller than 18 AWG (0.82 mm^2).

[b] Spacing requirements apply also to solder-type terminals

[c] Rigidly clamped assemblies include such parts as contact springs on relays or cam switches, printed-wiring boards, and similar parts.

[d] Spacings less than those indicated are permitted at integrated circuits and similar components where the spacing between adjacent connecting wires on the component is less than 1/32 inch (0.8 mm).

10.2 PCBA Clearance A (Equivalency)

10.2.1 Other than as noted in 10.1, the requirements of this section may be used to evaluate clearances less than those specified for the end product while maintaining the same overvoltage withstand capability for the equipment.

10.2.2 A clearance, less than the specified minimum through air spacing, may be suitable if acceptable results are obtained when tested in accordance with Section 41, Dielectric Voltage-Withstand Tests, using a voltage with a value in accordance with Table 10.2. For specified minimum clearances between the values in Table 10.2, interpolation may be used to determine the test voltage.

Table 10.2
Test voltages for verifying through air spacings (clearances)

End-product Standard specified minimum through air spacing,		Test voltages, kilovolts									
		ac impulse, ac peak, or dc					ac rms				
		Altitude[a], m or (air pressure, kPa)[b]					Altitude[a], m or (air pressure, kPa)[b]				
Inches	(mm)	0 (101.3)	200 (98.8)	500 (95.0)	1000 (90.0)	2000 (80.0)	0 (101.3)	200 (98.8)	500 (95.0)	1000 (90.0)	2000 (80.0)
1/64	(0.4)	1.7	1.7	1.7	1.6	1.5	1.2	1.2	1.2	1.2	1.1
1/32	(0.8)	2.2	2.1	2.1	2.0	1.9	1.5	1.5	1.5	1.4	1.3
3/64	(1.2)	2.75	2.7	2.65	2.5	2.3	1.95	1.9	1.9	1.75	1.6
1/16	(1.6)	3.3	3.3	3.2	3.0	2.7	2.4	2.3	2.3	2.1	1.9
3/32	(2.4)	4.4	4.3	4.1	3.9	3.5	3.1	3.0	2.9	2.8	2.5
1/8	(3.2)	5.3	5.2	5.0	4.8	4.3	3.7	3.7	3.6	3.4	3.0
3/16	(4.8)	6.9	6.8	6.6	6.2	5.6	4.9	4.8	4.7	4.4	4.0
1/4	(6.4)	8.3	8.2	7.9	7.5	6.8	5.9	5.9	5.6	5.3	4.8
3/8	(9.5)	10.9	10.7	10.3	9.8	8.8	7.7	7.7	7.3	7.0	6.3
1/2	(12.7)	14.0	13.7	13.2	12.5	11.2	9.9	9.7	9.3	8.9	7.9
1	(25.4)	25.5	24.6	24.0	22.7	20.2	18.2	17.6	17.1	16.2	14.4

[a] Next lower specified altitude to be used for intermediate altitudes.

[b] Values of air pressure in kilopascals are provided to permit testing at pressures simulating elevations different from the elevation of the test facility.

AVA Documents
Document Sharing Hub
Full document details: UL 2075 2023

10.2.3 The withstand capability of a clearance is related to air pressure, therefore, the selection of test voltage is to be based on the altitude of the test location.

10.3 PCBA Clearance B (Controlled Overvoltage)

10.3.1 The requirements of this section may be used to evaluate clearances where the levels of overvoltage are controlled.

10.3.2 Control of overvoltages may be achieved by either:

a) Providing overvoltage devices or systems as an integral part of the product; or

b) Marking the product with the rating of overvoltage control to which the product is to be connected, and the energy handling capability of the overvoltage device, if appropriate.

10.3.3 With reference to the marking in 10.3.2, the users of this standard must determine the appropriate method to state that the overvoltage control device or system should comply with the requirements in 10.3.4. One of the alternatives to marking the product would be to provide the information in published documentation.

10.3.4 Devices or systems, including filters or air gaps, used to control overvoltages in accordance with this section shall be evaluated using the requirements within this Standard and/or within the Standard for Transient Voltage Surge Suppressors, UL 1449 as applicable. If used in products having short circuit withstand ratings, the suppressors shall also withstand the available current when tested in accordance with UL 1449.

10.3.5 If a clearance is used to perform the function of controlling overvoltages, then consideration must be given to the ability of the clearance to handle the energy which may be available, to the overvoltage breakdown level of other clearances, and to the changes which may occur in and to an electric field when arc-over occurs.

10.3.6 Line connected devices and circuits shall be assigned both a phase-to-ground rated system voltage and an overvoltage category as specified in Table 10.3. Circuits, line connected or secondary, employing the clearances of Table 10.3, shall be protected for the rated impulse withstand voltage peak identified in Table 10.3. The switching test detailed in Section 10.5, Switching Test, should be conducted unless circuit analysis reveals that the appropriate protection is provided wherever Table 10.3 clearances are used.

10.3.7 Clearances are to be:

a) Evaluated by the dielectric voltage-withstand test in 10.2.2; or

b) Selected and measured in accordance with the dimensions in Table 10.3.

10.3.8 Clearances selected and measured in accordance with the dimensions in Table 10.3 do not require testing.

Documents
Document Sharing Hub

Full document details: UL 2075 2023

Table 10.3
Minimum clearances for equipment[a,e]

Phase-to-ground[b] rated system voltage (rms and dc)				Rated impulse withstand voltage peak, kV[d]	Clearance, mm			
Overvoltage category[c]					Pollution degree[f]			
I	II	III	IV		1	2	3	4
50	–	–	–	0.33	0.01	0.2	0.8	1.6
100	50	–	–	0.50	0.04	0.2	0.8	1.6
150	100	50	–	0.80	0.10	0.2	0.8	1.6
300	150	100	50	1.5	0.5	0.5	0.8	1.6
600	300	150	100	2.5	1.5	1.5	1.5	1.6
1000	600	300	150	4.0	3.0	3.0	3.0	3.0
1500	1000	600	300	6.0	5.5	5.5	5.5	5.5
–	1500	1000	600	8.0	8.0	8.0	8.0	8.0
–	–	1500	1000	12.0	14.0	14.0	14.0	14.0
–	–	–	1500	16.0	19.4	19.4	19.4	19.4

[a] The minimum values for pollution degrees 2, 3, and 4 are premised on the concept that pollution which may be present in these micro-environments may bridge small clearances.

[b] For ungrounded systems or systems with one phase grounded, the phase-to-ground voltage is considered to be the same as the phase-to-phase voltage for the purposes of using this table.

[c] Typical examples of categories for products are given below. Users of this standard will need to establish that rated impulse voltage values are appropriate for the expected applications of the products covered.

Category IV – Primary Supply Level. Overhead lines and cable systems including distribution and its associated overcurrent protective equipment (equipment installed at the service entrance).

Category III – Distribution Level. Fixed wiring and associated equipment (not electrical loads) connected to the primary supply level, Category IV.

Category II – Load Level. Appliances and portable equipment and the like connected to the distribution level, Category III.

Category I – Signal Level. Special equipment or parts of equipment such as low-voltage electronic logic systems, remote controls, signaling and power limited (per NEC Article 725) circuits connected to the load level, Category II.

[d] Value to use based on the rating of the overvoltage protection means.

[e] Linear interpolation of the values is permitted.

[f] See 10.4.

10.4 Pollution degree

10.4.1 Pollution degrees based on the presence of contaminants and possibility of condensation or moisture at the creepage distance are as follows:

a) Pollution Degree 1 – No pollution or only dry, nonconductive pollution. The pollution has no influence.

b) Pollution Degree 2 – Normally, only nonconductive pollution. However, a temporary conductivity caused by condensation may be expected.

c) Pollution Degree 3 – Conductive pollution, or dry, nonconductive pollution that becomes conductive due to condensation that is expected.

d) Pollution Degree 4 – Pollution that generates persistent conductivity through conductive dust or rain and snow.

Documents
Document Sharing Hub
Full document details: UL 2075 2023

10.5 Switching test

10.5.1 Where required by 10.1 – 10.4, Clearance B (Controlled Overvoltage), line and load terminals of a device are to be monitored for generated voltages during normal operation, including adjusting switches and controls, at rated operational voltage under load and no-load conditions. Generated voltages shall not be greater than the rated impulse withstand voltage peak specified in Table 10.3 for the device. This monitoring is to be done using an oscillographic study during a suitable test such as an overload test.

11 Corrosion Protection

11.1 Iron and steel parts shall be protected against corrosion by enameling, galvanizing, plating, or other means determined to be equivalent.

11.2 The requirement in 11.1 applies to all sheet steel or cast iron enclosures, and to all springs and other parts upon which mechanical operation depends. It does not apply to minor parts, such as washers, screws, and bolts where the failure of such unprotected parts does not result in a risk of fire or electric shock, or injury to persons, or impair the operation of the device. Parts made of polished or treated stainless steel do not require additional protection. Bearing surfaces shall be of materials that prevent binding due to corrosion.

11.3 Metal shall not be used in combinations tending to cause galvanic action which adversely affects cabinets or enclosures.

11.4 Hinges and other attachments shall be resistant to corrosion.

11.5 Nonferrous cabinets and enclosures require no special corrosion protection.

WIRING

12 Permanent Connection

12.1 General

12.1.1 A gas or vapor detector intended for permanent connection to a hazardous voltage circuit shall be provided with wiring terminals or leads for the connection of conductors of at least the size required by the National Electrical Code, ANSI\/NFPA 70-1996, or the Canadian Electrical Code, Part 1 (CSA Standard C22.1), corresponding to the rating of the unit.

12.2 Field-wiring compartment for hazardous voltage connection

12.2.1 The field-wiring compartment area shall be of sufficient size for completing all field-wiring connections as specified by the installation wiring diagram. There shall be space within the compartment to permit the use of a standard conduit bushing on conduit connected to the compartment when a bushing is required for installation.

12.2.2 Protection for internal components and wire insulation from sharp edges shall be provided by insulating barriers or metal barriers having smooth rounded edges.

12.3 Field-wiring terminals

12.3.1 Terminal parts to which field connections are to be made shall consist of binding screws with terminal plates having upturned lugs or a means determined to be equivalent to hold the wires in position. Other terminal connections shall be provided only when determined to be equivalent.

Documents
Document Sharing Hub
Full document details: UL 2075 2023

12.3.2 When a wiring-binding screw is employed at a field-wiring terminal the screw shall not be smaller than a No. 6 (3.5 mm diameter).

12.3.3 Except as noted in 12.3.4, a terminal plate tapped for a wire-binding screw shall be of metal not less than 0.030 inch (0.76 mm) thick and shall not have less than two full threads in the metal.

12.3.4 Wiring terminal assemblies that are used for field connections shall be prevented from turning.

12.4 Field-wiring leads

12.4.1 Power supply leads provided for field connection shall not be less than 6 inches (152 mm) long, provided with strain relief, and shall be no smaller than 18 AWG (0.82 mm^2). The insulation, when thermoplastic, shall not be less than 1/32 inch (0.8 mm) thick.

Exception No. 1: A lead is not prohibited from being less than 6 inches long when it is evident that the use of a longer lead results in damage to the insulation.

Exception No. 2: Solid copper leads as small as 26 AWG (0.13 mm^2) are not prohibited from use when:

a) The current does not exceed 1 ampere for lengths up to 2 feet (61 cm) and the current does not exceed 0.4 ampere for lengths from 2 feet up to 10 feet (3.05 m);

b) There are two or more conductors and they are covered by a common jacket, or the equivalent; and

c) The assembled conductors comply with the requirements of the Strain Relief Tests, Section 18.

12.4.2 Leads provided for field connection to power limited signaling circuits, such as those employed for connection to remote signaling devices, shall not be smaller than 16 AWG (1.3 mm^2), for a single conductor; 19 AWG (0.65 mm^2) for two or more conductors; and 26 AWG (0.13 mm^2) for four or more conductors of a multiconductor cable. The conductor shall be solid, bunch tinned stranded, or stranded copper. Stranded copper wire consisting of not more than seven strands shall be employed only for 18 AWG (0.82 mm^2) and larger conductors.

12.5 Grounded supply terminals and leads

12.5.1 A field-wiring terminal for the connection of a neutral supply conductor shall be identified by means of a metallic plated coating substantially white in color. It shall be readily distinguishable from the other terminals or proper identification of the terminal for the connection of the neutral conductor shall be clearly shown in another manner, such as on an attached wiring diagram.

12.5.2 A field-wiring lead provided for connection of a neutral supply conductor shall be finished to show a white or gray color and shall be readily distinguishable from other leads. No leads other than neutral conductors shall be so identified.

12.6 Internal Wiring

12.6.1 The internal wiring of a gas detector shall consist of conductors having insulation rated for the potential involved and the temperature to which it may be subjected. The wiring shall be arranged in an orderly fashion, routed away from moving parts and sharp projections and held in place with clamps, string ties, or the equivalent, unless of sufficient rigidity to retain a shaped form.

Documents
Document Sharing Hub
Full document details: UL 2075 2023

12.6.2 Leads connected to parts mounted on a hinged cover shall be of sufficient length to permit the full opening of the cover without applying stress to the leads or their connections. The leads shall be secured or equivalently arranged to prevent abrasion of insulation and jamming between parts of the enclosure.

12.6.3 If the use of a short length of insulated conductor is not feasible, e.g., a short coil lead or the like, electrical insulating tubing may be employed. The tubing is not to be subjected to sharp bends, tension, compression, or repeated flexing, and is not to contact sharp edges, projections, or corners. The wall thickness is to conform to the requirements for such tubing, except that the thickness at any point for the smaller sizes of polyvinyl chloride tubing is to be not less than 0.017 inch (0.5 mm). For insulating tubing of other types, the thickness is to be not less than that providing mechanical strength, dielectric properties, heat- and moisture-resistant characteristics, and the like at least equal to those of 0.017 inch (0.5 mm) thick polyvinyl chloride tubing.

12.6.4 Wireways shall be smooth and entirely free from sharp edges, burrs, fins, moving parts, and the like, which may cause abrasion of the conductor insulation. Holes in sheet metal partitions through which insulated wires pass shall be provided with a bushing if the wall is 0.042 inch (1.07 mm) or less in thickness. Holes in walls thicker than 0.042 inch (1.07 mm) shall have a bushing or smooth, rounded edges.

12.6.5 All joints and connections shall be mechanically secure and shall provide bonded electrical contact without strain on connections and terminals.

12.6.6 Stranded conductors clamped under wire binding screws or similar parts shall have the individual strands soldered together or be equivalently arranged.

12.6.7 A splice shall be provided with insulation equivalent to that of the wires involved.

12.6.8 Uninsulated live parts or moving parts involving a risk of injury shall be located, guarded, or enclosed so as to reduce the likelihood of contact by persons during servicing conditions such as relamping, changing fuses, adjusting controls, and operating switches.

12.6.9 If the linear distance from a component requiring servicing and uninsulated current carrying parts over 30 volts is less than 6 inches (152 mm), protection by insulating tape, barriers or the equivalent, shall be provided.

12.6.10 Internal wiring of circuits which operate at different potentials shall be separated by barriers or shall be segregated, unless the conductors of the circuits of lower voltage are provided with insulation for the highest voltage.

12.6.11 Segregation of insulated conductors may be accomplished by clamping, routing, or equivalent means which ensures permanent separation.

12.6.12 A metal barrier shall have a thickness at least as great as that required by Table 12.1, based on the size of the barrier. A barrier of insulating material shall not be less than 0.028 inch (0.71 mm) in thickness and shall be of greater thickness if its deformation may be readily accomplished so as to defeat its purpose. Any clearance between the edge of a barrier and a compartment wall shall not be more than1/16 inch (1.6 mm).

Documents
Document Sharing Hub
ULSE INC. COPYRIGHTED MATERIAL – NOT AUTHORIZED FOR FURTHER REPRODUCTION OR DISTRIBUTION WITHOUT PERMISSION FROM ULSE INC.
Full document details: UL 2075 2023

Table 12.1
Minimum thickness of sheet metal for electrical enclosures – carbon steel or stainless steel

Without supporting frame[a]				With supporting frame or equivalent reinforcing[a]				Minimum thickness			
								Uncoated,		Metal coated,	
Maximum width,[b]		Maximum length,[c]		Maximum width,[b]		Maximum length,		inch	(cm)	inch	(mm)
inches	(cm)	inches	(cm)	inches	(cm)	inches	(cm)	[MSG]		[GSG]	
4.0	(10.2)	Not limited		6.25	(15.9)	Not limited		0.020	(0.51)	0.023	(0.58)
4.75	(12.1)	5.75	(14.6)	6.75	(17.1)	8.25	(21.0)	[24]		[24]	
6.0	(15.2)	Not limited		9.5	(24.1)	Not limited		0.026	(0.66)	0.029	(0.74)
7.0	(17.8)	8.75	(22.2)	10.0	(25.4)	12.5	(31.8)	[22]		[22]	
8.0	(20.3)	Not limited		12.0	(30.5)	Not limited		0.032	(0.81)	0.034	(0.86)
9.0	(22.9)	11.5	(29.2)	13.0	(33.0)	16.0	(40.6)	[20]		[20]	
12.5	(31.8)	Not limited		19.5	(49.5)	Not limited		0.042	(1.07)	0.045	(1.14)
14.0	(35.6)	18.0	(45.7)	21.0	(53.3)	25.0	(63.5)	[18]		[18]	
18.0	(45.7)	Not limited		27.0	(68.6)	Not limited		0.053	(1.35)	0.056	(1.42)
20.0	(50.8)	25.0	(63.5)	29.0	(73.7)	36.0	(91.4)	[16]		[16]	
22.0	(55.9)	Not limited		33.0	(83.8)	Not limited		0.060	(1.52)	0.063	(1.60)
25.0	(63.5)	31.0	(78.7)	35.0	(88.9)	43.0	(109.2)	[15]		[15]	
25.0	(63.5)	Not limited		39.0	(99.1)	Not limited		0.067	(1.70)	0.070	(1.78)
29.0	(73.7)	36.0	(91.4)	41.0	(104.1)	51.0	(129.5)	[14]		[14]	
33.0	(83.8)	Not limited		51.0	(129.5)	Not limited		0.080	(2.03)	0.084	(2.13)
38.0	(96.5)	47.0	(119.4)	54.0	(137.2)	66.0	(167.6)	[13]		[13]	
42.0	(106.7)	Not limited		64.0	(162.6)	Not limited		0.093	(2.36)	0.097	(2.46)
47.0	(119.4)	59.0	(149.9)	68.0	(172.7)	84.0	(213.4)	[12]		[12]	
52.0	(132.1)	Not limited		80.0	(203.2)	Not limited		0.108	(2.74)	0.111	(2.82)
60.0	(152.4)	74.0	(188.0)	84.0	(213.4)	103.0	(261.6)	[11]		[11]	
63.0	(160.0)	Not limited		97.0	(246.4)	Not limited		0.123	(3.12)	0.126	(3.20)
73.0		90.0	(228.6)	103.0	(261.6)	127.0	(322.6)	[10]		[10]	

[a] See 9.2.5.

[b] The width is the smaller dimension of a rectangular sheet metal piece which is part of an enclosure. Adjacent surfaces of an enclosure may have supports in common and be made of a single sheet.

[c] For panels which are not supported along one side, for example, side panels of boxes, the length of the unsupported side shall be limited to the dimensions specified unless the side in question is provided with a flange at least 1/2 inch (12.7 mm) wide.

12.7 Field-wiring connections (carbon monoxide detectors)

12.7.1 A carbon monoxide detector shall be provided with wiring terminals or leads for the connection of conductors corresponding to the electrical rating of the detector and sized in accordance with the National Electrical Code, ANSI/NFPA 70 Installations. Duplicate terminals or wire leads, or an equivalent arrangement, shall be provided for circuits supplying operating power to the detector (where the operating power is monitored by an end-of-line device) and for circuits transmitting alarm signals from the detector to the control unit, one for each incoming and one for each outgoing wire. It is not prohibited that a common terminal be used in lieu of duplicate terminals when it is intended to prevent the looping of an unbroken wire around or under a terminal screw in a manner that permits the looped wire to remain unbroken during installation, thereby precluding monitoring in the event the wire becomes dislodged from under the terminal. A notched clamping plate under a single securing screw, where separate conductors are intended to be inserted in each notch, is an equivalent arrangement.

AVA Documents
Document Sharing Hub
Full document details: UL 2075 2023

13 Servicing Protection

13.1 General

13.1.1 Uninsulated live parts of high-voltage circuits, hazardous moving parts, and sharp corners and projections, shall be formed, located, guarded, or enclosed so as to prevent contact by persons during servicing such as relamping, fuse or rod replacement, battery replacement, adjusting of controls, and routine maintenance.

13.2 Trained service personnel

13.2.1 The requirements in 13.2.2 and 13.2.3 apply for non-household products intended to be serviced by trained service personnel.

Exception: Any part that is exposed only during operator servicing and complies with the Electric Shock Current Test, Section 19, is not required to comply with the requirements in 13.2.2 or 13.2.3.

13.2.2 When the linear distance from a component requiring servicing and all uninsulated current carrying parts of high-voltage circuits are less than 6 inches (152 mm), then protection by properly applied insulating tape, barriers, or protection determined to be the equivalent, shall be provided.

13.2.3 In lieu of the minimum 6 inches (152 mm) requirement in 13.2.2:

a) An interlock shall be provided on the cover to de-energize all live parts in the enclosure, or

b) The words "CAUTION – De-energize Unit Prior to Servicing" or wording determined to be equivalent, shall be permanently and prominently marked on the cover front.

PERFORMANCE

ALL PRODUCTS

14 General

14.1 Except as otherwise indicated, the performance of a product shall be investigated by subjecting three representative samples, in commercial form, to the applicable tests described in Sections 15 – 39.

14.2 Unless otherwise specified, the test voltages for each test of a product are to be at the rated frequency of the product as noted in Table 14.1.

Table 14.1
Test voltages

Unit rated voltage, nameplate	Test voltage
110 – 120	120
220 – 240	240
Other rating	Marked rating
Battery circuit	Nominal battery voltage

Documents
Document Sharing Hub
Full document details: UL 2075 2023

15 Sensitivity requirements

15.1 A sensor, detector or alarm shall operate within the sensitivity parameters defined by the manufacturer but must not exceed the sensitivity limits defined in:

a) This standard; and

b) The Standard for Single and Multiple Station Carbon Monoxide Alarms, UL 2034; or

c) The Standard for Residential Gas Detectors, UL 1484. A detector must produce an alarm signal at or below 25% of the LEL. This performance requirement applies to residential and commercial and industrial applications for detectors and/or their control assemblies that are intended for use in ordinary (non-hazardous) locations; or

d) The limits specified by the applicable Time Weighted Average (TWA) concentration as specified by the National Institute for Occupational Safety and Health; or

e) *Deleted*

f) ANSI/NFPA 497, Recommended Practice for Classification of Flammable Liquids, Gases, or Vapors and of Hazardous (Classified) Locations for Electrical Installation in Chemical Process Areas or

g) ANSI/NFPA 715, Standard for the Installation of Fuel Gases Detection and Warning Equipment.

15.2 A detector and/or sensor manufacturer that makes any claims regarding special features of construction or superior performance that exceed the requirements outlined in this Standard, all such claims shall be verified and the test procedures shall be extended or supplemented where necessary to verify their claimed performance.

15.3 The performance of a detector shall be verified for each gas that it is intended to detect.

15.4 The performance of a sensor shall be verified for each gas that the sensor is intended to detect.

15.5 The use of a General-Purpose Signaling System that utilizes sensors, detectors or alarms as initiating devices shall be verified in accordance with this Standard and other applicable UL Standards such as UL 864 and UL 2017.

15.6 Calibration

15.6.1 For detectors or sensors that are to be field calibrated, the procedure shall be outlined in the Instruction Manual and verified based on the frequency and method outlined within the Instruction Manual. If calibration is not required or calibration time frames are in excess of 30 days, the sensor shall comply with the reliability and/or electrical supervision requirements outlined within this Standard.

15.7 Test equipment

15.7.1 The alarm or detector may be installed in a chamber, having a volume of at least 1 cubic foot (0.0283 m^3), constructed so as to permit accurate monitoring and control of chamber air temperature and humidity and oxygen and gas concentrations. The following conditions shall be established within the test chamber and maintained throughout the test, unless otherwise specified by the instruction manual:

a) Ambient temperature at 23 ±3°C (73.4 ±5°F) or a higher temperature if specified by the manufacturer,

b) Relative humidity at 50 ±20 percent,

Documents
Document Sharing Hub
Full document details: UL 2075 2023

c) Oxygen concentration at 20.9 ±1 percent, and

d) Supply voltage, if applicable, adjusted to 100 percent of rated input voltage.

For alarms or detectors that are not installed within the test chamber, an equivalent test chamber or method to monitor and maintain the appropriate test conditions may be implemented.

15.8 Selectivity

15.8.1 The alarm, detector or sensor shall not produce an alarm or alarm signal when exposed sequentially, as described in 15.8.3 – 15.8.6, to the concentrations of gases and vapors shown in Table 15.1. Alternatively, for combustible and toxic gas detectors other than CO alarms intended for residential or commercial applications, the cross sensitivity and contamination gases and gas concentrations are to be specified by the manufacturer and outlined in the users manual. The gases and concentrations identified in the users manual shall constitute the list of gases to be used for selectivity testing.

Table 15.1
Gas and vapor concentrations

Substance	Concentration, ppm
Methane	500
n-Butane	300
n-Heptane	500
Ethyl acetate	200
Isopropyl alcohol	200
Carbon dioxide	5000
Ammonia	100
Ethanol	200
Toulene	200
Trichloroethane	200
Acetone	200

15.8.2 Calculate the interior volume of the test chamber used in 15.7. Deduct the volume of the device under test (as provided by the manufacturer). From this volume, calculate the amount of each test substance necessary to supply the concentrations identified in Table 15.1.

15.8.3 Ensure that the chamber has been well ventilated with fresh air. Place the device in operation inside the test chamber for 15 ±5 minutes. Close and seal the chamber to prevent air infiltration.

15.8.4 Using a syringe or equivalent device, add the calculated amount of the first substance into the chamber at a rate and in a location such that it is well mixed with the air and does not cause localized high concentrations.

15.8.5 Allow the device to remain in the chamber for 2 hours. During this time the alarm shall not sound.

15.8.6 Purge the chamber with clean air to remove all of the test atmosphere. Maintain clean air in the chamber for a recovery time of 16 hours or as specified by the manufacturer. In no case shall recovery time exceed 16 hours. Reseal the chamber and repeat the test using another substance from Table 15.1 until the alarm has been exposed to all substances. It is not required that exposure to the substances be in any particular order.

Documents
Document Sharing Hub
Full document details: UL 2075 2023

15.8.7 Following this test, the sensitivity test, see 15.1 – 15.5, using the target gas concentration is to be performed on the detector, alarm or sensor. All samples used for and tested to the requirements of the Selectivity Test, Section 15.8, shall comply with these requirements.

16 Sensitivity requirements

16.1 A detector or sensor shall operate for all conditions of its intended performance, at all sensitivity settings, when energized from a source of rated voltage, under all conditions covered both in the installation instructions and in any supplementary information provided by the manufacturer.

16.2 Detectors or sensors with alarm capabilities shall consistently alarm at levels within 5 percent of the gas concentration levels specified by the manufacturer's installation and operation instructions.

16.3 For multiple station alarm units, the activation of one station's alarm shall result in the actuation of all connected alarms, with the initiating alarm being uniquely identified.

16.4 Detectors or sensors with the capability of detecting multiple gases or vapors, as specified by the manufacturer, shall be tested for the detection of, and proper response to, each specified gas or vapor, individually.

17 Electrical Supervision Test

17.1 General

17.1.1 Alarms, detectors or sensors shall be electrically supervised so that any of the following conditions which prevents operation for an alarm signal from the alarm device shall result in an audible trouble signal within 200 seconds of the occurrence of the fault:

a) An instantaneous failure or removal of a limited life component,

Exception: The power source of a battery operated alarm.

b) An open in an externally connected alarm circuit

c) Electronically or optically detectable failure modes resulting from aging of the sensor or the sensing components, or

d) A ground fault in any externally connected wiring.

17.1.1.1 If the drop test affects the product's intended operation, the product shall comply with 17.1.1.

17.1.2 The wiring extending between alarms or sensor wired to a control assembly shall be electrically supervised so that a short or multiple ground fault, which prevents operation for an alarm signal, shall result in an audible trouble signal or result in an alarm signal. An open in any of the wiring between alarms is not required to be indicated by a trouble signal if the operation as a single station alarm is not prevented. This requirement does not apply to the interconnected wiring of alarms intended to be connected by a Class 1 wiring method.

Exception: A sensor with a failure rate less than 2.5 failure per million hours is not required to be supervised.

17.1.3 For air aspirated assemblies, the sample draw portion of the system shall be electrically supervised to monitor for partial and complete blockage of the sample stream. For this test, the sample port(s) shall be restricted to the blockage specified by the manufacture that impedes the assemblies ability to comply with the defined performance criteria.

AVA Documents
Document Sharing Hub
Full document details: UL 2075 2023

17.1.4 To determine if an device complies with the requirements for electrical supervision, the device is to be energized in the standby condition, and the type of fault to be detected is then to be introduced. Each fault shall be applied separately, the results noted and the fault removed. The device is then to be restored to the standby condition prior to establishing the next fault.

17.1.5 A fault condition (open, ground, or short), of other than the gas alarm circuit of a device with a non-gas alarm feature shall not prevent alarm signal operation as a gas alarm or sensor. For this test the alarm or sensor is to be energized from a rated source of supply in the normal standby condition and the fault is to be applied. With the fault applied the alarm or sensor is then to be subjected to a gas concentration level as specified in section 15.

17.2 AC powered units

17.2.1 Failure of an ac power source to a sensor, detector or alarm shall be indicated by de-energization of a power-on lamp.

17.2.2 Neither loss nor restoration of power shall cause an alarm signal under either momentary or extended (at least 1/2 hour) power outage conditions. Momentary energization of the alarm circuit (maximum of 1 second), and energization of the trouble circuit (maximum of 2 minutes), is not considered an alarm signal. A gradual increase to 110 percent of rated voltage or reduction to 0 volts from rated voltage at a rate of not greater than 5 volts per minute shall not result in energization of the alarm signal for more than 1 second.

17.2.3 Loss of power to a single detector or alarm while connected to a control panel, while energized in the standby condition, shall not result in a false alarm and shall not prevent the operation of the remaining units from alarming.

17.3 Battery powered units

17.3.1 A detector or alarm that uses a battery as the main source of supply shall be capable of producing an alarm signal for at least 12 hours at the battery voltage and/or current at which an audible trouble signal is obtained. Following the alarm signal, the source of supply shall then be capable of providing 7 days of audible trouble signal indication. The trouble signal is to be produced every 30 - 60 ±10% seconds for seven consecutive days.

17.3.2 To determine compliance with 17.3.1, three samples shall be equipped with batteries which have been depleted to the trouble signal level. The samples are to be placed in alarm for 12 hours. After the 12 hours of alarm, the trouble signal shall persist for at least 7 consecutive days. A fresh battery is depleted by applying a 1 percent or smaller loading factor based on the ampere hour rating of the battery. For example, a 1000 milliampere-hour rated battery would be depleted by applying a 10 milliamperes (1 percent load) or less drain continuously until the battery voltage reaches the predetermined test level.

17.3.3 If a battery operated alarm locks-in on alarm, it shall automatically transfer from alarm to audible trouble when the battery voltage reaches the trouble signal level. If an alarm does not lock-in on alarm, automatic transfer from alarm to trouble is not required.

17.3.4 To determine compliance with 17.3.3, two samples of an alarm that locks-in on alarm shall be equipped with batteries which have been depleted and stabilized at just above the trouble signal level. The samples are then to be placed in alarm and the battery voltage monitored. The samples shall automatically transfer to audible trouble when the battery trouble voltage is reached. The trouble signal shall persist for seven consecutive days. If the battery voltage recovers to a point where the trouble signal is not longer emitted, the unit shall be placed into alarm again until the trouble signal is reinstituted.

Documents
Document Sharing Hub
Full document details: UL 2075 2023

17.4 Component failure

17.4.1 If failure of a critical, limited life electronic component, such as opening or shorting of an electrolytic capacitor, is not indicated by an audible trouble or alarm signal, then a reliable component shall be used. The reliable component shall fall within the reliability prediction described in 3.5 and 3.6.

17.5 External wiring

17.5.1 An open or ground fault in the loop wiring connected from a single station detector, sensor or alarm to additional remote alarms that prevent operation for alarm signals from any of the interconnected alarms, shall not cause an alarm signal but shall result in an audible trouble signal. A short or double ground fault in the leads resulting in an audible trouble signal or an alarm signal is not prohibited.

17.5.2 An open, ground fault, or short in extra-low voltage circuit wiring among multiple station interconnected alarms or any wiring extending to a remote signaling device is not required to be indicated by a trouble signal if the fault does not prevent operation of any of the interconnected units as a single station alarm. A ground fault shall prevent operation for alarm only if the interconnected wiring is to be made in accordance with Class 1 requirements of the National Electrical Code, ANSI/NFPA 70, or the Canadian Electrical Code, Part I (CSA Standard C22.1). The installation wiring diagram shall indicate the type of connections to be employed.

17.5.3 An open, ground fault, or short in the extra-low voltage circuit conductors extending between the output of a separate power supply and an alarm, which prevents operation of the alarm, shall result in de-energization of the alarm power-on light.

17.6 End-of-life signal

17.6.1 The requirements outlined in 17.6.2 – 17.6.4 shall apply to detectors with limited life components but shall not exceed the requirements specified in this standard. The end-of-life signal for detectors employing non-replaceable limited life components shall not exceed a product lifetime of 10 years.

17.6.2 Detectors with limited life components shall produce an end-of-life signal (see 3.5.1) based on the manufacturer's specified lifetime. The end-of-life signal shall repeat once every 30 – 60 seconds ±10 percent. The end-of-life signal may be produced at the detector or the signal may be produced at the control panel if the control panel can identify the specific detector. The end-of-life signal shall be triggered either by an internal timer or by a self-diagnostic test(s) as follows:

a) For a detector that employs an internal timer that activates the end-of-life signal, once the maximum specified lifetime is reached, the end-of-life signal shall be initiated. The end-of-life signal can be reset repeatedly for a period not exceeding 72 hours for each period of reset provided that the self-diagnostic test(s) does not result in a trouble signal. The end-of-life signal timer shall not be able to be reset after a maximum of 30 days. The manufacturer shall provide detailed documentation of the timer operation that includes, among other things, a description of how the timer data is affected by either short or long term removal of power to the detector.

b) The end-of-life signal shall be allowed to be reset prior to the end of 30 days, but shall not be allowed to be reset beyond the maximum of 30 days.

c) For a detector that employs a signal generated by a self-diagnostic test, the end-of-life signal shall be initiated once the manufacturer specified fault has been identified. The manufacturer shall provide a detailed description operation associated with the self-diagnostic process/procedure, describe a method to verify the self-diagnostic that results in an end-of-life signal and provide the additional equipment necessary to confirm operation of the end-of-life signal within the timelines specified by the manufacturer not exceeding the limits of this standard.

AVA Documents
Document Sharing Hub
Full document details: UL 2075 2023