UL 1917

ISBN 0-7629-0836-X

Solid-State Fan Speed Controls

Document Was Downloaded By Rice, Shi SHIMISHENG
For Use By KUANTECH CO LTD
12039 : 8/3/2007 - 1:49 AM

UL COPYRIGHTED MATERIAL –
NOT AUTHORIZED FOR FURTHER REPRODUCTION OR
DISTRIBUTION WITHOUT PERMISSION FROM UL

Documents
Document Sharing Hub

Full document details: UL 224 1999

Document Was Downloaded By Rice, Shi SHIMISHENG
For Use By KUANTECH CO LTD
12039 : 8/3/2007 - 1:49 AM

UL COPYRIGHTED MATERIAL –
NOT AUTHORIZED FOR FURTHER REPRODUCTION OR
DISTRIBUTION WITHOUT PERMISSION FROM UL

Documents
Document Sharing Hub

Underwriters Laboratories Inc. (UL)
333 Pfingsten Road
Northbrook, IL 60062-2096

UL Standard for Safety for Solid-State Fan Speed Controls, UL 1917

Third Edition, Dated February 28, 2003

Revisions: This Standard contains revisions through and including February 5, 2007.

Summary of Topics

Revision pages have been issued for the Standard for Solid-State Fan Speed Controls, UL 1917, to reflect the reaffirmation of the ANSI approval.

UL Standards for Safety are developed and maintained in the Standard Generalized Markup Language (SGML). SGML -- an international standard (ISO 8879-1986) -- is a descriptive markup language that describes a document's structure and purpose, rather than its physical appearance on a page. Due to formatting differences resulting from the use of UL's new electronic publishing system, please note that additional pages (on which no requirements have been changed) may be included in revision pages due to relocation of existing text and reformatting of the Standard.

Text that has been changed in any manner is marked with a vertical line in the margin. Changes in requirements are marked with a vertical line in the margin and are followed by an effective date note indicating the date of publication or the date on which the changed requirement becomes effective.

The revisions dated February 5, 2007 include a reprinted title page (page1) for this Standard.

As indicated on the title page (page 1), this UL Standard for Safety is an American National Standard. Attention is directed to the note on the title page of this Standard outlining the procedures to be followed to retain the approved text of this ANSI/UL Standard.

The UL Foreword is no longer located within the UL Standard. For information concerning the use and application of the requirements contained in this Standard, the current version of the UL Foreword is located on ULStandardsInfoNet at: http://ulstandardsinfonet.ul.com/ulforeword.html

The master for this Standard at UL's Northbrook Office is the official document insofar as it relates to a UL service and the compliance of a product with respect to the requirements for that product and service, or if there are questions regarding the accuracy of this Standard.

UL's Standards for Safety are copyrighted by UL. Neither a printed copy of a Standard, nor the distribution diskette for a Standard-on-Diskette and the file for the Standard on the distribution diskette should be altered in any way. All of UL's Standards and all copyrights, ownerships, and rights regarding those Standards shall remain the sole and exclusive property of UL.

All rights reserved. No part of this publication may be reproduced, stored in a retrieval system, or transmitted in any form by any means, electronic, mechanical photocopying, recording, or otherwise without prior permission of UL.

Revisions of UL Standards for Safety are issued from time to time. A UL Standard for Safety is current only if it incorporates the most recently adopted revisions.

Document Was Downloaded By Rico, Shi SHIMISHENG
For Use By KUANTECH CO LTD
12039 : 3/3/2007 - 1:49 AM

UL COPYRIGHTED MATERIAL –
NOT AUTHORIZED FOR FURTHER REPRODUCTION OR
DISTRIBUTION WITHOUT PERMISSION FROM UL

Documents
Document Sharing Hub

Full document details: UL 224 1999

UL provides this Standard ″as is″ without warranty of any kind, either expressed or implied, including but not limited to, the implied warranties of merchantability or fitness for any purpose.

In no event will UL be liable for any special, incidental, consequential, indirect or similar damages, including loss of profits, lost savings, loss of data, or any other damages arising out of the use of or the inability to use this Standard, even if UL or an authorized UL representative has been advised of the possibility of such damage. In no event shall UL's liability for any damage ever exceed the price paid for this Standard, regardless of the form of the claim.

UL will attempt to answer support requests concerning electronic versions of its Standards. However, this support service is offered on a reasonable efforts basis only, and UL may not be able to resolve every support request. UL supports the electronic versions of its Standards only if they are used under the conditions and operating systems for which it is intended. UL's support policies may change from time-to-time without notification.

UL reserves the right to change the format, presentation, file types and formats, delivery methods and formats, and the like of both its printed and electronic Standards without prior notice.

Purchasers of the electronic versions of UL's Standards for Safety agree to defend, indemnify, and hold UL harmless from and against any loss, expense, liability, damage, claim, or judgement (including reasonable attorney's fees) resulting from any error or deviation introduced while purchaser is storing an electronic Standard on the purchaser's computer system.

If a single-user version electronic Standard was purchased, one copy of this Standard may be stored on the hard disk of a single personal computer, or on a single LAN file-server or the permanent storage device of a multiple-user computer in such a manner that this Standard may only be accessed by one user at a time and for which there is no possibility of multiple concurrent access.

If a multiple-user version electronic Standard was purchased, one copy of the Standard may be stored on a single LAN file-server, or on the permanent storage device of a multiple-user computer, or on an Intranet server. The number of concurrent users shall not exceed the number of users authorized.

Electronic Standards are intended for on-line use, such as for viewing the requirements of a Standard, conducting a word search, and the like. Only one copy of the Standard may be printed from each single-user version of an electronic Standard. Only one copy of the Standard may be printed for each authorized user of a multiple-user version of an electronic Standard. Because of differences in the computer/software/printer setup used by UL and those of electronic Standards purchasers, the printed copy obtained by a purchaser may not look exactly like the on-line screen view or the printed Standard.

An employee of an organization purchasing a UL Standard can make a copy of the page or pages being viewed for their own fair and/or practical internal use.

The requirements in this Standard are now in effect, except for those paragraphs, sections, tables, figures, and/or other elements of the Standard having future effective dates as indicated in the note following the affected item. The prior text for requirements that have been revised and that have a future effective date are located after the Standard, and are preceded by a ″SUPERSEDED REQUIREMENTS″ notice.

New product submittals made prior to a specified future effective date will be judged under all of the requirements in this Standard including those requirements with a specified future effective date, unless the applicant specifically requests that the product be judged under the current requirements. However, if

Document Was Downloaded By Rice, Shi SHIMISHENG
For Use By KUANTECH CO LTD
12039 : 3/3/2007 - 1:49 AM

UL COPYRIGHTED MATERIAL –
NOT AUTHORIZED FOR FURTHER REPRODUCTION OR
DISTRIBUTION WITHOUT PERMISSION FROM UL

Documents
Document Sharing Hub

Full document details: UL 224 1999

the applicant elects this option, it should be noted that compliance with all the requirements in this Standard will be required as a condition of continued Listing, Recognition, and Follow-Up Services after the effective date, and understanding of this should be signified in writing.

Copyright © 2007 Underwriters Laboratories Inc.

This Standard consists of pages dated as shown in the following checklist:

Page	Date
1-3	February 5, 2007
4-5	February 28, 2003
6	February 5, 2007
7-56	February 28, 2003
A1-A2	February 28, 2003

Document Was Downloaded By Rice, Shi SHIMISHENG
For Use By KUANTECH CO LTD
12039 : 8/3/2007 - 1:49 AM

UL COPYRIGHTED MATERIAL –
NOT AUTHORIZED FOR FURTHER REPRODUCTION OR
DISTRIBUTION WITHOUT PERMISSION FROM UL

Documents
Document Sharing Hub

Full document details: UL 224 1999

No Text on This Page

Document Was Downloaded By Rice, Shi SHIMISHENG
For Use By KUANTECH CO LTD
12039 : 8/3/2007 - 1:49 AM

UL COPYRIGHTED MATERIAL –
NOT AUTHORIZED FOR FURTHER REPRODUCTION OR
DISTRIBUTION WITHOUT PERMISSION FROM UL

Documents
Document Sharing Hub

Full document details: UL 224 1999

FEBRUARY 28, 2003
(Title Page Reprinted: February 5, 2007)

ANSI/UL 1917-2007

1

UL 1917

Standard for Solid-State Fan Speed Controls

Prior to the first edition, the requirements for the products covered by this standard were included in the Standard for Electric Industrial Control Equipment, UL 508.

First Edition – December, 1989
Second Edition February, 1994

Third Edition

February 28, 2003

The most recent designation of ANSI/UL 1917 as a Reaffirmed American National Standard (ANS) occurred on February 1, 2007. The ANSI approval does not include the Cover Page, Transmittal Pages, or the Title Page.

This ANSI/UL Standard for Safety, which consists of the third edition with revisions through February 5, 2007 is under continuous maintenance, whereby each revision is ANSI approved upon publication.

An effective date included as a note immediately following certain requirements is one established by Underwriters Laboratories Inc. and is not part of the ANSI Standard.

Revisions of this Standard will be made by issuing revised or additional pages bearing their date of issue. A UL Standard is current only if it incorporates the most recently adopted revisions, all of which are itemized on the transmittal notice that accompanies the latest set of revised requirements. Comments or proposals for revisions on any part of the Standard may be submitted to UL at any time. Proposals should be submitted via a Proposal Request in UL's On-Line Collaborative Standards Development System (CSDS) at http://csds.ul.com.

ISBN 0-7629-0836-X

COPYRIGHT © 1989, 2007 UNDERWRITERS LABORATORIES INC.

Document Was Downloaded By Rice, Shi SHIMISHENG
For Use By KUANTECH CO LTD
12039 : 8/3/2007 - 1:49 AM

UL COPYRIGHTED MATERIAL –
NOT AUTHORIZED FOR FURTHER REPRODUCTION OR
DISTRIBUTION WITHOUT PERMISSION FROM UL

Documents
Document Sharing Hub

Full document details: UL 224 1999

No Text on This Page

Document Was Downloaded By Rice, Shi SHIMISHENG
For Use By KUANTECH CO LTD
12039 : 8/3/2007 - 1:49 AM

UL COPYRIGHTED MATERIAL –
NOT AUTHORIZED FOR FURTHER REPRODUCTION OR
DISTRIBUTION WITHOUT PERMISSION FROM UL

Documents
Document Sharing Hub

Full document details: UL 224 1999

CONTENTS

INTRODUCTION

1 Scope 7
2 Glossary 8
3 Components 8
4 Units of Measurement 9
5 Undated References 9
6 General 9

CONSTRUCTION

7 Enclosure 9
7.1 General 9
7.2 Cast metal 10
7.3 Sheet metal 10
7.4 Polymeric 11
7.5 Doors and covers 11
7.6 Application of probes 13
7.7 Conduit connection 13
7.8 Bonding 13
7.9 Adjustment opening 14
8 Corrosion Protection 14
8.1 General 14
8.2 Outdoor enclosures 14
9 Mounting 14
9.1 Surface mounted 14
9.2 Wall box mounted 15
10 Direct Plug-In Devices 15
11 Switches 17
11.1 General 17
11.2 Dimmers 17
12 Live Parts 17
13 Internal Wiring 18
13.1 General 18
13.2 Routing of internal wiring 18
13.3 Clamps and guides 18
13.4 Insulating bonding and grounding conductors 18
13.5 Splices and connections 19
13.6 Splice insulation 19
14 Supply Connections – Permanently Connected Speed Controls 20
14.1 General 20
14.2 Tapped holes for conduit 20
14.3 Knockouts 20
14.4 Terminals 21
14.5 Field wiring space 22
15 Supply Connections – Cord Connected Speed Controls 22
15.1 Cords and plugs 22
15.2 Strain relief 24

Document Was Downloaded By Rice, Shi SHUMISHENG
For Use By KUANTECH CO LTD
12039 : 8/3/2007 - 1:49 AM

UL COPYRIGHTED MATERIAL –
NOT AUTHORIZED FOR FURTHER REPRODUCTION OR
DISTRIBUTION WITHOUT PERMISSION FROM UL

Documents
Document Sharing Hub

Full document details: UL 224 1999

15.3 Bushings 25
15.4 Receptacles 25
16 Supply Connections – Direct Plug-In Devices 26
17 Spacings 26
17.1 General 26
17.2 Primary circuit spacings 27
17.3 Secondary circuit spacings 27
17.4 Limited energy 28
17.5 Battery power 28
17.6 Insulating barriers 28
18 Separation of Circuits 29
19 Grounding 30

PERFORMANCE

20 General 31
21 Temperature Test 33
22 DC Offset Voltage Test 39
23 Overload Test 39
24 Endurance Test 41
25 Dielectric Voltage-Withstand Test 43
26 Short Circuit Test 43
27 Breakdown of Components Test 45
28 Crush Test 45
29 Compression Test 45
30 Deflection Test 46
31 Securement of Snap-On Cover Test 46
32 Polymeric Enclosure Conduit Connection Tests 47
32.1 General 47
32.2 Pullout 47
32.3 Torque 47
32.4 Bending 47
32.5 Knockouts 49
33 Abuse Test 49
34 Strain Relief Test 50
35 Push Back Relief Test 50
36 Security of Leads Test 50
37 Terminal Torque Test 51

MANUFACTURING AND PRODUCTION TESTS

38 Dielectric Voltage-Withstand Test 51
39 DC Offset Voltage Test 53

RATINGS

40 General 53

MARKINGS

41 General Markings 53
42 Cautionary and Warning Markings 55

Document Was Downloaded By Rice, Shi SHAMISHENG
For Use By KUANTECH CO LTD
12039 : 8/3/2007 - 1:49 AM

UL COPYRIGHTED MATERIAL –
NOT AUTHORIZED FOR FURTHER REPRODUCTION OR
DISTRIBUTION WITHOUT PERMISSION FROM UL

Documents
Document Sharing Hub

Full document details: UL 224 1999

INSTRUCTIONS

43 Details 56

Appendix A

Standards for Components. A1

Document Was Downloaded By Rice, Shi SHIMISHENG
For Use By KUANTECH CO LTD
12039 : 8/3/2007 - 1:49 AM

UL COPYRIGHTED MATERIAL –
NOT AUTHORIZED FOR FURTHER REPRODUCTION OR
DISTRIBUTION WITHOUT PERMISSION FROM UL

Documents
Document Sharing Hub

Full document details: UL 224 1999

This page intentionally left blank.

Document Was Downloaded By Rice, Shi SHIMISHENG
For Use By KUANTECH CO LTD
12039 : 8/3/2007 - 1:49 AM

UL COPYRIGHTED MATERIAL –
NOT AUTHORIZED FOR FURTHER REPRODUCTION OR
DISTRIBUTION WITHOUT PERMISSION FROM UL

Documents
Document Sharing Hub

Full document details: UL 224 1999

INTRODUCTION

1 Scope

1.1 These requirements cover solid state speed controls rated 300 volts or less, single phase, intended to be connected to 15 – 20 ampere branch circuits and intended to be installed in accordance with the National Electrical Code, ANSI/NFPA 70 and used with:

a) Fans and blowers that circulate air, such as desk, bracket, ceiling, hassock, pedestal, and utility fans;

b) Fans and blowers that ventilate air, such as attic, wall-insert, ceiling-insert, household hood- and canopy-types, and window fans;

c) Evaporative coolers;

d) Air-filtering appliances;

e) Fan-type deodorizers; and

f) Fan-type air fresheners.

1.2 Inductive-type and capacitive-type fan speed controls are also covered by these requirements.

1.3 These requirements also cover the solid state fan speed control portion of controls which include dimmers for use with lighting fixtures.

1.4 Solid state fan speed controls provided with a power supply cord, those intended for permanent connection, and direct plug-in devices are also covered by this Standard.

1.5 These requirements do not cover solid state speed controls used with air heaters incorporating fans, heating-ventilating units, or blowers comprising components of such equipment as furnaces, mechanical-refrigeration equipment, air conditioners, or direct current output applications.

1.6 These requirements do not cover solid state speed controls used with fans intended to be:

a) Used in hazardous locations as defined in the National Electrical Code, ANSI/NFPA 70;

b) Installed over solvents or chemically flammable liquids or vapors; or

c) Located in chemically corrosive environments.

Document Was Downloaded By Rice, Shi SHIMISHENG
For Use By KUANTECH CO LTD
12039 : 8/3/2007 - 1:49 AM

UL COPYRIGHTED MATERIAL –
NOT AUTHORIZED FOR FURTHER REPRODUCTION OR
DISTRIBUTION WITHOUT PERMISSION FROM UL

Documents
Document Sharing Hub

Full document details: UL 224 1999

2 Glossary

2.1 For the purpose of this standard the following definitions apply.

2.2 CORD CONNECTED DEVICE – A device intended for connection to the power source by means of a supply cord. Such a device is intended to be moved for reasons of interchange or realignment of the units of the system.

2.3 FAN, CEILING SUSPENDED – A fan intended to be mounted to a ceiling outlet box or ceiling building structure, and whose blades rotate below the ceiling. Popularly called a paddle fan.

2.4 FAN, GENERAL PURPOSE – Any fan not considered to be a ceiling-suspended fan or any fan which has a Locked Rotor Current/Full Load Current ratio greater than 1.5.

2.5 FAN SPEED CONTROL, CAPACITIVE-TYPE – A fan speed control that uses switchable capacitors to regulate the speed of the motor.

2.6 FAN SPEED CONTROL, INDUCTIVE-TYPE – A fan speed control that uses inductors to regulate the speed of the motor.

2.7 FAN SPEED CONTROL, SEMICONDUCTOR-TYPE – A fan speed control that utilizes semiconductors to regulate the speed of the motor. See 41.14.

2.8 LEAD CONNECTED DEVICE – A device which is intended to be permanently connected to the power source. Such a device is not intended to be moved or realigned once it is installed.

3 Components

3.1 Except as indicated in 3.2, a component of a product covered by this standard shall comply with the requirements for that component. See Appendix A for a list of standards covering components generally used in the products covered by this standard.

3.2 A component is not required to comply with a specific requirement that:

a) Involves a feature or characteristic not required in the application of the component in the product covered by this standard, or

b) Is superseded by a requirement in this standard.

3.3 A component shall be used in accordance with its rating established for the intended conditions of use.

3.4 Specific components are incomplete in construction features or restricted in performance capabilities. Such components are intended for use only under limited conditions, such as certain temperatures not exceeding specified limits, and shall be used only under those specific conditions.

Document Was Downloaded By Rice, Shi SHIMISHENG
For Use By KUANYECHI CO LTD
12039 : 8/3/2007 - 1:49 AM

UL COPYRIGHTED MATERIAL –
NOT AUTHORIZED FOR FURTHER REPRODUCTION OR
DISTRIBUTION WITHOUT PERMISSION FROM UL

Documents
Document Sharing Hub

Full document details: UL 224 1999

4 Units of Measurement

4.1 Values stated without parentheses are the requirement. Values in parentheses are explanatory or approximate information.

5 Undated References

5.1 Any undated reference to a code or standard appearing in the requirements of this standard shall be interpreted as referring to the latest edition of that code or standard.

6 General

6.1 The term ″speed control″ as used in this standard refers to a solid-state speed control used with electric fans for non-industrial applications.

CONSTRUCTION

7 Enclosure

7.1 General

7.1.1 A speed control shall be provided with a complete enclosure for all live parts and all operating parts other than necessarily exposed operating parts, such as an actuating member.

Exception: An open speed control (see 20.4) intended for installation in a wall box is not required to be provided with a complete enclosure of the field wiring terminals.

7.1.2 An enclosure of a speed control shall be constructed and assembled so that it has the strength and rigidity necessary to resist the abuses to which it is likely to be subjected, without total or partial collapse resulting in a risk of fire, electric shock, or injury to persons due to reduction of spacings, loosening or displacement of parts, or other serious defects.

7.1.3 An enclosure shall be constructed so as to reduce the risk of unintentional contact with enclosed electrical devices, and to provide internal devices with protection from specified external conditions.

7.1.4 The enclosure shall be constructed such that the switchplate cover mounting means, such as mounting screws, shall not enter the interior of the speed control.

Exception: The mounting means may penetrate the interior of the speed control if the applicable evaluations defined in Sections 7 – 36 are performed with a screw having a length of 3/8 inch (9.5 mm) in place.

7.1.5 Mechanical protection shall be provided to protect components during and after installation. See Crush Test, Section 28.

Document Was Downloaded By Rice, Shi SHIMISHENG
For Use By KUANTECH CO LTD
12039 : 8/3/2007 - 1:49 AM

UL COPYRIGHTED MATERIAL –
NOT AUTHORIZED FOR FURTHER REPRODUCTION OR
DISTRIBUTION WITHOUT PERMISSION FROM UL

Documents
Document Sharing Hub

Full document details: UL 224 1999

7.2 Cast metal

7.2.1 A cast-metal enclosure shall be at least 1/8 inch (3.2 mm) thick at every point, more than 1/8 inch thick at reinforcing ribs and door edges, and at least 1/4 inch (6.4 mm) thick at tapped holes for conduit.

Exception: Other than at plain or threaded conduit holes, malleable iron and die-cast or permanent mold cast aluminum, brass, bronze, or zinc shall be:

a) At least 3/32 inch (2.4 mm) thick for an area greater than 24 square inches (155 cm^2) or having any dimension more than 6 inches (152 mm); and

b) At least 1/16 inch (1.6 mm) thick for an area of 24 square inches or less having no dimension more than 6 inches. The area considered may be bounded by reinforcing ribs subdividing a larger area.

7.3 Sheet metal

7.3.1 The thickness of a sheet-metal enclosure shall not be less than that specified in Tables 7.1 and 7.2, except that at points to which a wiring system is to be connected, uncoated steel shall be at least 0.032 inch (0.81 mm) thick, zinc-coated steel at least 0.034 inch (0.86 mm) thick, and nonferrous metal at least 0.045 inch (1.14 mm) thick.

Exception: Enclosure thickness at points other than where a wiring system is to be connected need not comply with these thickness requirements if the enclosure complies with the requirements in Sections 29 and 30.

7.3.2 Tables 7.1 and 7.2 are based on a uniform deflection of the enclosure surface for any given load concentrated at the center of the surface regardless of metal thickness.

Table 7.1
Thickness of sheet metal for enclosures carbon steel or stainless steel

Maximum width[a]		Maximum length[b]		Minimum thickness			
				Uncoated		Metal coated	
inches	(cm)	inches	(cm)	inches	(mm)	inches	(mm)
4.0	(10.2)	Not limited					
4.75	(12.1)	5.75	(14.6)	0.020	(0.51)	0.023	(0.58)
6.0	(15.2)	Not limited					
7.0	(17.8)	8.75	(22.2)	0.026	(0.66)	0.029	(0.74)
8.0	(20.3)	Not limited					
9.0	(22.9)	11.5	(29.2)	0.032	(0.81)	0.034	(0.86)
12.5	(31.8)	Not limited					
14.0	(35.6)	18.0	(45.7)	0.042	(1.07)	0.045	(1.14)

[a] The width is the smaller dimension of a rectangular sheet metal piece that is part of an enclosure. Adjacent surfaces of an enclosure may have supports in common and be made of a single sheet.

[b] Not limited applies only if the edge of the surface is flanged at least 1/2 inch (12.7 mm) or fastened to adjacent surfaces not normally removed in use.

Document Was Downloaded By Rice, Shi SHIMISHENG
For Use By KUANTECH CO LTD
12039 : 8/3/2007 - 1:40 AM

UL COPYRIGHTED MATERIAL –
NOT AUTHORIZED FOR FURTHER REPRODUCTION OR
DISTRIBUTION WITHOUT PERMISSION FROM UL

Documents
Document Sharing Hub

Full document details: UL 224 1999

Table 7.2
Thickness of sheet metal for enclosures aluminum, copper, or brass

Maximum width[a]		Maximum length[b]		Minimum thickness	
inches	(cm)	inches	(cm)	inches	(mm)
3.0	(7.6)	Not limited			
3.5	(8.9)	4.0	(10.2)	0.023	(0.58)
4.0	(10.2)	Not limited			
5.0	(12.7)	6.0	(15.2)	0.029	(0.74)
6.0	(15.2)	Not limited			
6.5	(16.5)	8.0	(20.3)	0.036	(0.91)
8.0	(20.3)	Not limited			
9.5	(24.1)	11.5	(29.2)	0.045	(1.14)
12.0	(30.5)	Not limited			
14.0	(35.6)	16.0	(40.6)	0.058	(1.47)

[a] The width is the smaller dimension of a rectangular piece of sheet metal that is part of an enclosure. Adjacent surfaces of an enclosure may have supports in common and be made of a single sheet.

[b] Not limited applies only if the edge of the surface is flanged at least 1/2 inch (12.7 mm) or fastened to adjacent surfaces not normally removed in use.

7.4 Polymeric

7.4.1 A polymeric electrical enclosure or a polymeric part of an electrical enclosure shall comply with the applicable requirements in the Standard for Polymeric Materials – Use in Electrical Equipment Evaluations, UL 746C, and also with the additional requirements specified in this standard.

Exception: A polymeric plug or other closure made of a material rated 5V in accordance with the Standard for Tests for Flammability of Plastic Materials for Parts in Devices and Appliances, UL 94, need not comply with UL 746C.

7.5 Doors and covers

7.5.1 A part of an enclosure, such as a door or a cover, shall be provided with a means – such as latches, locks, interlocks, or screws – for firmly securing it in place.

Exception: A snap-on cover that complies with the requirements in the Securement of Snap-On Cover Test, Section 31, is not required to have additional securing means.

7.5.2 The articulate probe illustrated in Figure 7.1 shall be used as a measuring instrument to judge the accessibility to uninsulated live parts and film-coated wire provided by openings of the cover plate and not as an instrument to judge the strength of a material; the probes shall be applied with only the minimum force necessary to determine the accessibility.

Document Was Downloaded By Rico, Shi SHIMISHENG
For Use By KUANTECH CO LTD
12039 : 8/3/2007 - 1:49 AM

UL COPYRIGHTED MATERIAL –
NOT AUTHORIZED FOR FURTHER REPRODUCTION OR
DISTRIBUTION WITHOUT PERMISSION FROM UL

Documents
Document Sharing Hub

Full document details: UL 224 1999

Figure 7.1
Articulate probe with web stop

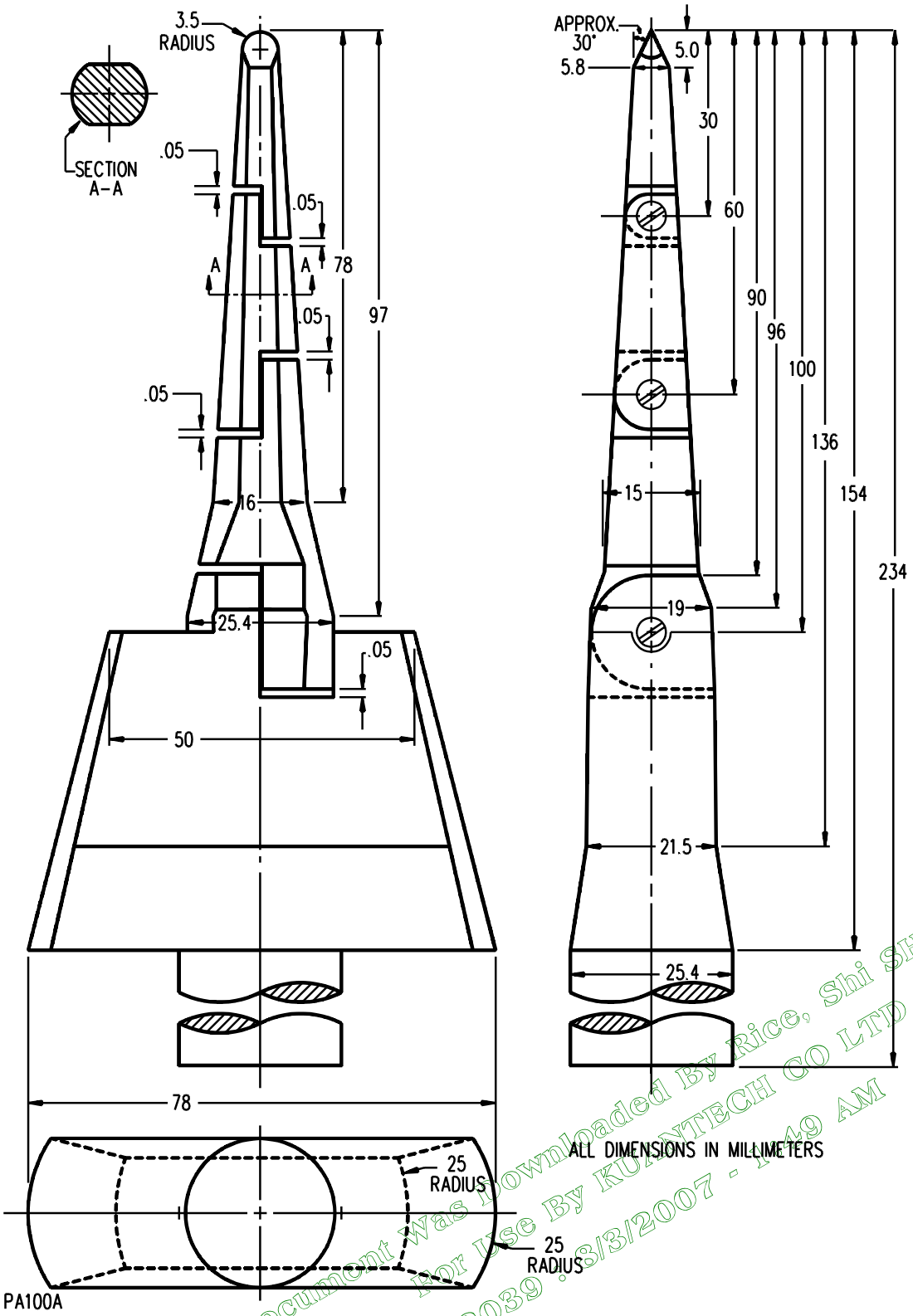

Document Was Downloaded By Rice, Shi SHIMISHENG
For Use By KUANTECH CO LTD
12039 : 8/3/2007 - 1:49 AM

UL COPYRIGHTED MATERIAL –
NOT AUTHORIZED FOR FURTHER REPRODUCTION OR
DISTRIBUTION WITHOUT PERMISSION FROM UL

Documents
Document Sharing Hub

7.6 Application of probes

7.6.1 The probe illustrated in Figure 7.1 shall be applied to any depth that the opening will permit and shall be rotated or angled before, during, and after insertion through the opening to any position that is necessary to try to contact an uninsulated live part or film-coated wire. The probe shall be applied in the above-described manner and in any possible configuration; and, if necessary, the configuration shall be changed after insertion through the opening. Configuration refers to positioning of the jointed portions of the probe.

7.6.2 Any part that can be contacted by the probe is judged to be accessible.

7.7 Conduit connection

7.7.1 A polymeric enclosure intended for connection to a rigid conduit system shall comply with the test requirements described in Section 32, Polymeric Enclosure Conduit Connection Tests.

7.8 Bonding

7.8.1 An enclosure made of insulating material, either wholly or in part, shall have an acceptable bonding means to provide continuity of grounding between all conduit openings. The bonding means may be either completely assembled on the product or provided as separate parts for field installation.

Exception: A bonding means is not required for the enclosure of a fan speed control that is intended to be connected to a single conduit.

7.8.2 The continuity of a conduit system shall be provided by metal-to-metal contact not relying on a polymeric material.

Exception: The continuity of the grounding system may rely on the integrity of the polymeric enclosure if samples have been subjected to the creep test requirements in the Standard for Polymeric Materials – Short Term Property Evaluations, UL 746A. Overcurrent tests shall be conducted at 200 percent of the rated current of the branch circuit-protective device.

7.8.3 A separate bonding conductor, whether in a plastic or metal enclosure, shall be copper, a copper alloy, or other material acceptable for use as an electrical conductor. Ferrous metal parts in the grounding path shall be protected against corrosion by enameling, galvanizing, plating, or other equivalent means. A separate bonding conductor shall:

a) Be protected from mechanical damage or be located within the confines of the outer enclosure or frame; and

b) Not be secured by a removable fastener used for any purpose other than bonding unless the bonding conductor is unlikely to be omitted after removal and replacement of the fastener.

7.8.4 The size of a separate component bonding conductor shall not be less than 12 AWG (2.32 mm^2) for copper and 10 AWG (2.95 mm^2) for aluminum, or the size of the conductor supplying the component, whichever is smaller.

Exception: A bonding conductor may be smaller than that specified if it complies with the bonding conductor requirements in the Standard for Industrial Control Equipment, UL 508.

Document Was Downloaded By Nice, Shi SHIMISHENG
For Use By KUANTECH CO LTD
12039 : 8/3/2007 - 1:49 AM

UL COPYRIGHTED MATERIAL –
NOT AUTHORIZED FOR FURTHER REPRODUCTION OR
DISTRIBUTION WITHOUT PERMISSION FROM UL

Documents
Document Sharing Hub

Full document details: UL 224 1999

7.9 Adjustment opening

7.9.1 An adjustment opening shall not permit the entrance of a 1/8 inch (3.2 mm) diameter rod. If the distance between the opening and the nearest live part is more than 4 inches (102 mm), the opening shall not permit the entrance of a 1/2 inch (12.7 mm) diameter rod.

8 Corrosion Protection

8.1 General

8.1.1 Iron and steel parts shall be protected against corrosion by enameling, galvanizing, plating, or other finish that has been found by investigation to be acceptable for the purpose. This requirement applies to all enclosing cases whether of sheet steel or cast iron, and to all springs and other parts upon which proper mechanical operation may depend.

Exception: This requirement does not apply to:

a) Small parts of iron or steel, such as washers, screws, bolts, and the like, that are not current carrying, if the corrosion of such parts would not result in a risk of fire, electric shock, or injury to persons; and

b) Parts made of stainless steel that are polished or treated, if necessary.

8.1.2 If the yoke, strap, or mounting ears are made of steel, as described in 9.2.1, the corrosion protection for a fan speed control for use in a flush-device box or on an outlet-box cover shall be a zinc or cadmium coating not less than 0.00015 inch (0.0038 mm) thick in accordance with the method for determining protection against corrosion in the Standard for Metallic Outlet Boxes, UL 514A, or other coatings determined to be acceptable for the particular application.

8.2 Outdoor enclosures

8.2.1 Enclosures intended for other than indoor Type 1 use shall comply with the applicable enclosure requirements in the Standard for Enclosures for Electrical Equipment, UL 50.

9 Mounting

9.1 Surface mounted

9.1.1 Provisions shall be made for securely mounting an enclosed speed control to a supporting surface. A bolt, screw, or other part used to mount a component of the equipment shall not be used for securing the equipment to the supporting surface.

Document Was Downloaded By Rice, Jim SHIMISHENG
For Use By KUANTECH CO LTD
12039 : 8/3/2007 - 1:49 AM

UL COPYRIGHTED MATERIAL –
NOT AUTHORIZED FOR FURTHER REPRODUCTION OR
DISTRIBUTION WITHOUT PERMISSION FROM UL

Documents
Document Sharing Hub

Full document details: UL 224 1999