UL 2251

STANDARD FOR SAFETY

Plugs, Receptacles, and Couplers for Electric Vehicles

UL COPYRIGHTED MATERIAL –
NOT AUTHORIZED FOR FURTHER REPRODUCTION OR
DISTRIBUTION WITHOUT PERMISSION FROM UL

Documents
Document Sharing Hub

Copyright UL
Provided by IHS Markit under license with UL
No reproduction or networking permitted without license from IHS
Full document details: UL 2251 2017

Licensee=/, User=,
Not for Resale,

UL COPYRIGHTED MATERIAL –
NOT AUTHORIZED FOR FURTHER REPRODUCTION OR
DISTRIBUTION WITHOUT PERMISSION FROM UL

Documents
Document Sharing Hub

Copyright UL
Provided by IHS Markit under license with UL
No reproduction or networking permitted without license from IHS
Full document details: UL 2251 2017

Licensee=/, User=,
Not for Resale,

UL Standard for Safety for Plugs, Receptacles, and Couplers for Electric Vehicles, UL 2251

Fourth Edition, Dated November 20, 2017

Summary of Topics

This Fourth Edition of the Standard for Plugs, Receptacles, and Couplers for Electric Vehicles, UL 2251, is being issued to incorporate the following:

Revised Product Designations

Clarification of Scope and Products Not Covered by UL 2251

Addition of New Definition for Grounding/Bonding Conductor

Clarification to Ratings and Required Designation of Ratings

Clarification of the Fused Devices Requirement

Clarification of Cable Requirements for the Impact Test

Revised Requirements for Metallic Enclosures

Revised Requirements for Pollution Degree

Revision to the Temperature Rise Test

New Requirements for Device Configurations in Relation to Pin Lengths and Speed of Disconnection

Reinstatement of the Overload Test Conditions for Connectors ″Not Intended for Current Interruption″

Revision to Address the Environmental Rating of Internal Parts

Removal of National Differences for Canada

The new/revised requirements are substantially in accordance with Proposal(s) on this subject dated March 10, 2017 and September 15, 2017.

All rights reserved. No part of this publication may be reproduced, stored in a retrieval system, or transmitted in any form by any means, electronic, mechanical photocopying, recording, or otherwise without prior permission of UL.

UL provides this Standard ″as is″ without warranty of any kind, either expressed or implied, including but not limited to, the implied warranties of merchantability or fitness for any purpose.

In no event will UL be liable for any special, incidental, consequential, indirect or similar damages, including loss of profits, lost savings, loss of data, or any other damages arising out of the use of or the inability to use this Standard, even if UL or an authorized UL representative has been advised of the possibility of such damage. In no event shall UL's liability for any damage ever exceed the price paid for this Standard, regardless of the form of the claim.

UL COPYRIGHTED MATERIAL –
NOT AUTHORIZED FOR FURTHER REPRODUCTION OR
DISTRIBUTION WITHOUT PERMISSION FROM UL

Documents
Document Sharing Hub

Copyright UL
Provided by IHS Markit under license with UL
No reproduction or networking permitted without license from IHS
Full document details: UL 2251 2017

Licensee=/, User=,
Not for Resale,

Users of the electronic versions of UL's Standards for Safety agree to defend, indemnify, and hold UL harmless from and against any loss, expense, liability, damage, claim, or judgment (including reasonable attorney's fees) resulting from any error or deviation introduced while purchaser is storing an electronic Standard on the purchaser's computer system.

UL COPYRIGHTED MATERIAL –
NOT AUTHORIZED FOR FURTHER REPRODUCTION OR
DISTRIBUTION WITHOUT PERMISSION FROM UL

Documents
Document Sharing Hub

Copyright UL
Provided by IHS Markit under license with UL
No reproduction or networking permitted without license from IHS
Full document details: UL 2251 2017

Licensee=/, User=,
Not for Resale,

Association of Standardization and Certification
NMX-J-678-ANCE-2017
Second Edition

CSA Group
CSA C22.2 No. 282-17
Second Edition

Underwriters Laboratories Inc.
UL 2251
Fourth Edition

Standard for Plugs, Receptacles, and Couplers for Electric Vehicles

November 20, 2017

ANSI/UL 2251-2017

UL COPYRIGHTED MATERIAL –
NOT AUTHORIZED FOR FURTHER REPRODUCTION OR
DISTRIBUTION WITHOUT PERMISSION FROM UL

Documents
Document Sharing Hub

Copyright UL
Provided by IHS Markit under license with UL
No reproduction or networking permitted without license from IHS
Full document details: UL 2251 2017

Licensee=/, User=,
Not for Resale,

Commitment for Amendments

This standard is issued jointly by the Association of Standardization and Certification (ANCE), the Canadian Standards Association (operating as "CSA Group"), and Underwriters Laboratories Inc. (UL). Comments or proposals for revisions on any part of the standard may be submitted to ANCE, CSA Group, or UL at any time. Revisions to this standard will be made only after processing according to the standards development procedures of ANCE, CSA Group, and UL. CSA Group and UL will issue revisions to this standard by means of a new edition or revised or additional pages bearing their date of issue. ANCE will incorporate the same revisions into a new edition of the standard bearing the same date of issue as the CSA Group and UL pages.

Copyright © 2017 ANCE

Rights reserved in favor of ANCE.

ISBN 978-1-4883-1359-2 © 2017 CSA Group

All rights reserved. No part of this publication may be reproduced in any form whatsoever without the prior permission of the publisher.

To purchase CSA Group Standards and related publications, visit CSA Group's Online Store at shop.csa.ca or call toll-free 1-800-463-6727 or 416-747-4044.

This Standard is subject to periodic review, and suggestions for its improvement will be referred to the appropriate committee. To submit a proposal for change, please send the following information to inquires@csagroup.org and include ″Proposal for change″ in the subject line: Standard designation (number); relevant clause, table, and/or figure number; wording of the proposed change; and rationale for the change.

Copyright © 2017 Underwriters Laboratories Inc.

UL's Standards for Safety are copyrighted by UL. Neither a printed nor electronic copy of a Standard should be altered in any way. All of UL's Standards and all copyrights, ownerships, and rights regarding those Standards shall remain the sole and exclusive property of UL.

This ANSI/UL Standard for Safety consists of the Fourth Edition.

The most recent designation of ANSI/UL 2251 as an American National Standard (ANSI) occurred on November 20, 2017. ANSI approval for a standard does not include the Cover Page, Transmittal Pages, Title Page (front and back), or the Preface.

Comments or proposals for revisions on any part of the Standard may be submitted to UL at any time. Proposals should be submitted via a Proposal Request in UL's On-Line Collaborative Standards Development System (CSDS) at https://csds.ul.com.

To purchase UL Standards, visit UL's Standards Sales Site at http://www.shopulstandards.com/HowToOrder.aspx or call toll-free 1-888-853-3503.

UL COPYRIGHTED MATERIAL –
NOT AUTHORIZED FOR FURTHER REPRODUCTION OR
DISTRIBUTION WITHOUT PERMISSION FROM UL

Documents
Document Sharing Hub

Copyright UL
Provided by IHS Markit under license with UL
No reproduction or networking permitted without license from IHS
Full document details: UL 2251 2017

Licensee=/, User=,
Not for Resale,

CONTENTS

Preface 6

INTRODUCTION

1 Scope 8
2 Definitions 8
3 Components 9
4 Units of Measurement 10
5 Normative References 10

CONSTRUCTION

6 General 10
7 Configurations 10
7.1 General 10
7.2 Contact sequencing 11
8 Insulating Materials 11
8.1 Flammability 11
8.2 Electrical properties 12
8.3 Thermal properties 13
9 Protection against Corrosion 13
10 Enclosures 14
10.1 General 14
10.2 Mechanical strength 14
10.3 Nonmetallic enclosures 14
10.4 Metallic enclosures 15
10.5 EV plug, vehicle connector, and EV breakaway coupling enclosures 15
10.6 Environmental enclosures 15
11 Current-Carrying Parts 15
12 Clearances and Creepage Distances 16
13 Accessibility of Live Parts 17
14 Grounding 19
15 Grounding Connections 20
16 Isolation 21
17 Terminal Parts 21
18 Contacts 22
19 Assembly 22
20 Separation of Circuits 23
20.1 Factory wiring 23
20.2 Separation barriers 23
20.3 Field wiring 24
21 Devices Intended to Accommodate a Fuse 24
22 Cable Grip 25
23 Sharp Edges 26

PERFORMANCE

24 Representative Devices 26
25 Accelerated Aging Tests 28
25.1 Rubber compounds 28

UL COPYRIGHTED MATERIAL –
NOT AUTHORIZED FOR FURTHER REPRODUCTION OR
DISTRIBUTION WITHOUT PERMISSION FROM UL

Documents
Document Sharing Hub

Copyright UL
Provided by IHS Markit under license with UL
No reproduction or networking permitted without license from IHS
Full document details: UL 2251 2017

Licensee=/, User=,
Not for Resale,

25.2 PVC compounds 29
26 Mold Stress Relief Test 29
27 Moisture Absorption Resistance 29
28 Humidity Conditioning 30
29 Insulation Resistance Test 31
30 Dielectric Withstand Test 31
31 Dew Point Test 32
32 Conductor Secureness and Pullout Test 32
33 Cable Secureness Test 33
34 Impact Test (EV Plugs, Vehicle Connectors, and EV Breakaway Couplings) 34
35 Crush Test 36
36 Vehicle Driveover Test 37
37 Withdrawal Force Test 38
37.1 EV plugs and EV receptacles, vehicle connectors, and vehicle inlets 38
37.2 EV breakaway couplings 39
38 Grounding Path Current Test 39
39 Short Circuit Test 40
39.1 General 40
39.2 Protective devices 40
39.3 Calibration of test circuits 43
40 Strength of Insulating Base and Support Test 48
41 No-Load Endurance Test 49
42 Endurance with Load Test 49
43 Overload Test 50
44 Electromagnetic Test (Pilot Contacts) 52
45 Temperature Rise Test 53
46 Fuseholder Temperature Test 54
47 Surface Temperatures 55
48 Resistance to Arcing Test 56
49 Polarization Integrity Test 56
50 Resistance to Corrosion Test 56
51 Vibration Test 56
52 Accelerated Aging Gasket Test 57
53 Permanence of Marking Tests (Mexico and US) 58
54 Enclosure Tests for Environmental Protection 59

RATINGS

55 General 60

MARKINGS

56 General 61
56.1 Company name, catalog designation, electrical rating 61
56.2 Multiple factories 62
56.3 Nonconductive mounting means 62
56.4 Disconnecting use only 63
56.5 AC or DC only devices 63
56.6 Cover grounded devices 63
56.7 Fused devices 63
56.8 Locking-type devices 63
56.9 EV receptacle marking location 64
56.10 Wiring information – field wiring terminals 64

UL COPYRIGHTED MATERIAL –
NOT AUTHORIZED FOR FURTHER REPRODUCTION OR
DISTRIBUTION WITHOUT PERMISSION FROM UL
Documents
Document Sharing Hub

Copyright UL
Provided by IHS Markit under license with UL
No reproduction or networking permitted without license from IHS
Full document details: UL 2251 2017
Licensee=/, User=,
Not for Resale,

56.11 Overcurrent protection 65
56.12 Environmental enclosures 65
56.13 EV cable assembly markings 66
57 Identification and Marking of Terminals 66
57.1 General 66
57.2 Grounded and grounding 66
57.3 Other terminals 68

Annex A – Reference Standards (Normative)

Annex B – French and Spanish Translations (Informative)

B1 French and Spanish Translations 73

UL COPYRIGHTED MATERIAL –
NOT AUTHORIZED FOR FURTHER REPRODUCTION OR
DISTRIBUTION WITHOUT PERMISSION FROM UL

Documents
Document Sharing Hub

Copyright UL
Provided by IHS Markit under license with UL
No reproduction or networking permitted without license from IHS
Full document details: UL 2251 2017

Licensee=/, User=,
Not for Resale,

Preface

This is the harmonized ANCE, CSA Group, and UL Standard for Plugs, Receptacles, and Couplers for Electric Vehicles. It is the Second edition of NMX-J-678-ANCE, the Second edition of CSA-C22.2 No. 282, and the Fourth edition of UL 2251. This edition of CSA-C22.2 No. 282 supersedes the previous edition published February 22, 2013. This edition of NMX-J-678-ANCE supersedes the previous edition published in 2013. This edition of UL 2251 supersedes the previous edition published February 22, 2013.

This harmonized standard was prepared by the Association of Standardization and Certification (ANCE), CSA Group, and Underwriters Laboratories Inc. (UL). The efforts and support of the Technical Harmonization Working Group for Electric Vehicle Couplers are gratefully acknowledged.

This standard is considered suitable for use for conformity assessment within the stated scope of the Standard.

The present Mexican Standard was reviewed and approved by the Comité de Normalización de la Asociación de Normalización y Certificación, A.C., CONANCE.

This standard was reviewed by the CSA Subcommittee on Electrical Vehicle–Safety of Plugs, Receptacles, and Couplers, under the jurisdiction of the CSA Technical Committee on Wiring Products and the CSA Strategic Steering Committee on Requirements for Electrical Safety, and has been formally approved by the CSA Technical Committee.

This standard has been approved by the American National Standards Institute (ANSI) as an American National Standard.

Application of Standard

Where reference is made to a specific number of specimens to be tested, the specified number is to be considered a minimum quantity.

Note: Although the intended primary application of this standard is stated in its scope, it is important to note that it remains the responsibility of the users of the standard to judge its suitability for their particular purpose.

Level of Harmonization

This standard uses the IEC format but is not based on, nor is considered equivalent to, an IEC standard.

This standard is published as an equivalent standard for ANCE, CSA Group, and UL.

An equivalent standard is a standard that is substantially the same in technical content, except as follows: Technical national differences are allowed for codes and governmental regulations as well as those recognized as being in accordance with NAFTA Article 905, for example, because of fundamental climatic, geographical, technological, or infrastructural factors, scientific justification, or the level of protection that the country considers appropriate. Presentation is word for word except for editorial changes.

UL COPYRIGHTED MATERIAL –
NOT AUTHORIZED FOR FURTHER REPRODUCTION OR
DISTRIBUTION WITHOUT PERMISSION FROM UL

Documents
Document Sharing Hub

Copyright UL
Provided by IHS Markit under license with UL
No reproduction or networking permitted without license from IHS
Full document details: UL 2251 2017

Licensee=/, User=,
Not for Resale,

Reasons for differences from IEC

This standard provides general requirements for plugs, receptacles, and couplers for electric vehicles in accordance with the electrical installation codes of Canada, Mexico, and the United States. At present there is no IEC standard for these products for use in accordance with these codes. Therefore, this standard does not employ any IEC standard for base requirements.

Interpretations

The interpretation by the standards development organization of an identical or equivalent standard is based on the literal text to determine compliance with the standard in accordance with the procedural rules of the standards development organization. If more than one interpretation of the literal text has been identified, a revision is to be proposed as soon as possible to each of the standards development organizations to more accurately reflect the intent.

UL COPYRIGHTED MATERIAL –
NOT AUTHORIZED FOR FURTHER REPRODUCTION OR
DISTRIBUTION WITHOUT PERMISSION FROM UL

Documents
Document Sharing Hub

Copyright UL
Provided by IHS Markit under license with UL
No reproduction or networking permitted without license from IHS
Licensee=/, User=,
Not for Resale,
Full document details: UL 2251 2017

INTRODUCTION

1 Scope

1.1 These requirements cover EV plugs, EV receptacles, vehicle inlets, vehicle connectors, and EV breakaway couplings, rated up to 800 amperes and up to 600 volts ac or dc. These devices are intended for use with conductive electric vehicle supply equipment (EVSE), and are intended to facilitate the conductive connection from the EVSE to the vehicle. These devices are for use in either indoor or outdoor nonhazardous locations in accordance with Annex A, Ref. No. 1.

1.2 This Standard does not directly apply to any device that is not intended for use as described in 1.1.

1.3 In the text of this Standard, the term ″device″ refers to any product covered by this Standard. The letters ″EV″ refer to an electric vehicle, including plug-in hybrid vehicles, hybrid vehicles, electric vehicles, battery electric vehicles, and similar vehicles.

2 Definitions

2.1 For the purposes of this Standard, the following definitions apply.

2.2 BREAKAWAY COUPLINGS – A device located within a length of EV cable, between the electric vehicle supply equipment (EVSE) end and the vehicle connector end, that is intended to separate under a pull force, such that its separation will protect the end connections from a strain that could break wiring connections or rupture insulation. These devices are intended to be reconnectable, and may or may not be intended for current interruption.

2.3 CONTACT – A conductive element in a device that mates with a corresponding element in a mating device to provide an electrical conductive path.

2.4 CONTROL PILOT – The primary control conductor that is connected through the control circuitry. It may perform several functions, including assurance that the vehicle is present and connected, start/stop control, and supply equipment current rating; and it provides for continuous monitoring for the Personnel Protection System.

2.5 DELAYED ACTION – An arrangement that delays the separation of device housings to reduce the likelihood of exposure of arcing contacts during the breaking of the circuit when the EV plug or vehicle connector is withdrawn.

2.6 ENCLOSURE – The case or housing that is used to enclose all live parts and into which the insulator and contacts are assembled.

2.7 EV CABLE ASSEMBLY– A portable cable assembly consisting of a length of EV Cable and provided with a vehicle connector on one end and that may be provided with an EV plug on the other.

2.8 FIELD WIRING TERMINAL – A terminal to which power supply, control, or equipment grounding connections will be made in the field when the device is installed.

UL COPYRIGHTED MATERIAL –
NOT AUTHORIZED FOR FURTHER REPRODUCTION OR
DISTRIBUTION WITHOUT PERMISSION FROM UL

Documents
Document Sharing Hub

Copyright UL
Provided by IHS Markit under license with UL
No reproduction or networking permitted without license from IHS
Full document details: UL 2251 2017

Licensee=/, User=,
Not for Resale,

2.9 GROUNDED SYSTEM – A charging system that depends on reliable grounding of the circuitry to provide the basis for the Personnel Protection System. The ground connection is considered to be a protective earth connection, and the circuitry and conductors that make up the ground path are suitable for the potential ground fault currents expected for that product rating.

2.10 GROUNDING/BONDING CONDUCTOR – A conductor that is defined in Annex A, Ref. No. 1 (US and Mexico) as an equipment grounding conductor, and a conductor that is defined in Annex A, Ref. No. 1 (Canada) as a bonding conductor.

2.11 INSULATOR – That portion of a device that provides for separation and support of contacts.

2.12 ISOLATED SYSTEM – A charging system that depends on reliable isolation of the circuitry from all dead metal parts or circuits that can be contacted by the user. The isolation is monitored as part of the Personnel Protection System. The ground connection is not relied on for safety and is considered a functional or reference ground. The reference ground connection is used by the isolation monitor to monitor the isolation of the system. The functional or reference ground is not expected to carry ground fault current and, based on this, is not expected to be sized in accordance with the device rating.

2.13 PLUG, EV – A device intended to receive power when inserted into an EV receptacle. It establishes connection between conductors of the attached electric vehicle cable and the conductors connected to the EV receptacle.

2.14 RECEPTACLE, EV – A device that is intended to provide power to an inserted EV plug, and that is usually installed as a fixed outlet on equipment. These devices are not intended to be installed in building structures or as branch circuit devices. See 1.2.

2.15 TERMINAL – A conductive part provided on a contact for connecting a conductor.

2.16 VEHICLE CONNECTOR – A connector, that by insertion into a vehicle inlet, establishes an electrical connection to the electric vehicle for the purpose of providing power and information exchange, with means for attachment of electric vehicle cable. This device is a part of the vehicle coupler.

2.17 VEHICLE COUPLER – A means enabling the connection, at will, of an electric vehicle cable to the equipment. It consists of a vehicle connector and a vehicle inlet.

2.18 VEHICLE, ELECTRIC (EV) – An automotive-type vehicle for on-road use, such as passenger automobiles, buses, trucks, vans, neighborhood electric vehicles, and the like, primarily powered by an electric motor that draws current from a rechargeable storage battery, fuel cell, photovoltaic array, or other source of electric current. Plug-in hybrid electric vehicles (PHEV) are considered electric vehicles. For the purpose of this definition, off-road, self-propelled electric vehicles, such as industrial trucks, hoists, lifts, transports, golf carts, airline ground support equipment, tractors, boats, and the like, are not included.[§]

[§]Reprinted with permission from NFPA 70®-2011, *National Electrical Code*, Copyright © 2010, National Fire Protection Association, Quincy, MA.

2.19 VEHICLE INLET – The part incorporated in, or fixed to the vehicle, which receives power from a vehicle connector.

3 Components

3.1 Except as indicated in 3.2, a component of a product covered by this Standard shall comply with the requirements for that component.

UL COPYRIGHTED MATERIAL –
NOT AUTHORIZED FOR FURTHER REPRODUCTION OR
DISTRIBUTION WITHOUT PERMISSION FROM UL

Documents
Document Sharing Hub

Copyright UL
Provided by IHS Markit under license with UL
No reproduction or networking permitted without license from IHS
Full document details: UL 2251 2017

Licensee=/, User=,
Not for Resale,

3.2 A component is not required to comply with a specific requirement that:

a) Involves a feature or characteristic not required in the application of the component in the product covered by this standard, or

b) Is superseded by a requirement in this standard.

3.3 A component shall be used in accordance with its rating established for the intended conditions of use.

3.4 Specific components are incomplete in construction features or restricted in performance capabilities. Such components are intended for use only under limited conditions, such as certain temperatures not exceeding specified limits, and shall be used only under those specific conditions.

4 Units of Measurement

4.1 The values given in SI (metric) units shall be normative. Any other values given shall be for information purposes only.

5 Normative References

5.1 Where reference is made to any standards, such reference shall be considered to refer to the latest editions and revisions thereto available at the time of printing, unless otherwise specified.

5.2 Products covered by this Standard shall comply with the referenced installation codes and standards noted in Annex A as appropriate for the country where the product is to be used. When the product is intended for use in more than one country, the product shall comply with the installation codes and standards for all countries where it is intended to be used.

5.3 For products intended for use in Canada, general requirements are given in Annex A, Ref. No. 31. In Mexico and the US, this does not apply.

CONSTRUCTION

6 General

6.1 The ratings mentioned throughout this Standard represent maximum ampacity and voltage for a device. A device is considered to be intended for use on alternating and direct current unless the rating includes a marking to restrict the use to alternating current or direct current. See 56.5.

7 Configurations

7.1 General

7.1.1 The configuration of a device includes the physical dimensions of the device, geometry of the device, and pin configuration of a device. The specific configuration of devices covered by this Standard is not specified in this document. Any configuration complying with these requirements is suitable for use in accordance with the scope of this Standard.

UL COPYRIGHTED MATERIAL –
NOT AUTHORIZED FOR FURTHER REPRODUCTION OR
DISTRIBUTION WITHOUT PERMISSION FROM UL

Documents
Document Sharing Hub

Copyright UL
Provided by IHS Markit under license with UL
No reproduction or networking permitted without license from IHS
Full document details: UL 2251 2017

Licensee=/, User=,
Not for Resale,

7.1.2 With reference to 7.1.1, a particular configuration of EV plug or vehicle connector requires a similarly configured EV receptacle or vehicle inlet, respectively. This is defined as a mated pair. All devices covered by this Standard are expected to be mated pairs with a EV plug and EV receptacle or a vehicle connector and vehicle inlet, covered as one mated device. This requirement applies for all products unless as described in 7.1.3.

7.1.3 Devices designed in accordance with the standardized configurations in Annex A, Ref. Nos. 16, 32, or 33, may be evaluated as individual devices, without a specific mating device.

7.1.4 An EV breakaway coupling is a mated pair by definition. The configuration of the EV breakaway coupling shall be such that the two halves of the EV breakaway coupling can mate together. The EV breakaway coupling configuration is not required to match the EV plug or vehicle connector configuration provided continuity of all conductors is maintained when mated.

7.1.5 Grounding contact length of engagement shall be 3.2 mm (0.126 inch) longer than the line contacts.

7.1.6 Line contact length of engagement shall be 3.2 mm (0.126 inch) longer than the control pilot contact when a control pilot is present.

7.2 Contact sequencing

7.2.1 The contact sequence during the connection process shall be:

a) Grounding contact,

b) Neutral contact N, if provided,

c) Line contacts, AC or DC, and

d) Control pilot contact, if provided.

The proximity contact or the connection switch contact, if any, shall make after the grounding contact and before or simultaneously with the control pilot contact. During disconnection, the order shall be reversed.

7.2.2 The neutral contact N shall make before or simultaneously with line contacts, and break after or simultaneously with line contacts.

8 Insulating Materials

8.1 Flammability

8.1.1 All parts that act as the electrical insulation or enclosure of a device shall be of ceramic, or another insulating material permitted for the particular application. Hard rubber is not permitted.

8.1.2 Vulcanized fiber can be used for insulating washers, separators, and barriers, but not as the sole support for live parts. The material shall be moisture resistant in accordance with Moisture Absorption Resistance, 27.

UL COPYRIGHTED MATERIAL –
NOT AUTHORIZED FOR FURTHER REPRODUCTION OR
DISTRIBUTION WITHOUT PERMISSION FROM UL

Documents
Document Sharing Hub

Copyright UL
Provided by IHS Markit under license with UL
No reproduction or networking permitted without license from IHS
Full document details: UL 2251 2017

Licensee=/, User=,
Not for Resale,

8.1.3 Except as noted in 8.1.4 – 8.1.6, a polymeric material used for electrical insulation, an internal barrier necessary to maintain electrical spacings, or enclosure of live parts shall have a flame class rating of HB or better in accordance with Annex A, Ref. No. 17.

8.1.4 The internal insulating systems of components where component requirements exist need not have a flame class rating.

8.1.5 A small part meeting all the following criteria need not have a flame class rating:

a) Its volume does not exceed 2 cm^3 (0.122^3 inch),

b) Its maximum dimension does not exceed 3 cm (1.18 inches), and

c) Its location is such that it cannot propagate flame from one area to another or act as a bridge between a possible source of ignition and other ignitable parts.

8.1.6 Fiber and similar material that is equal to or less than 0.25 mm (0.010 inch) thick need not have a flame class rating.

8.2 Electrical properties

8.2.1 Except as noted in 8.2.2 – 8.2.6, a polymeric material used for electrical insulation, an internal barrier necessary to maintain electrical spacings, or enclosure of live parts shall comply with Table 8.1. If tests are needed to verify compliance, the material shall be tested in accordance with the applicable test in Annex A, Ref. No. 18.

8.2.2 The internal insulating systems of components where component requirements exist need not comply with the requirements in 8.2.1.

8.2.3 A small part meeting all the following criteria need not comply with the requirements in 8.2.1.

a) Its volume does not exceed 2 cm^3 (0.122 $inch^3$),

b) *Its maximum dimension does not exceed 3 cm (1.18 inches), and*

c) *Its location is such that it cannot propagate flame from one area to another or act as a bridge between a possible source of ignition and other ignitable parts.*

8.2.4 Fiber and similar material that is equal to or less than 0.25 mm (0.010 inch) thick need not comply with the requirements in 8.2.1.

8.2.5 A polymeric material used in an enclosure of an EV plug or vehicle connector which does not enclose live parts, or which encloses insulated live parts where the insulation thickness is greater than 0.071 mm (0.028 inch), need not comply with the requirements for Hot Wire Ignition in Table 8.1.

8.2.6 A polymeric material used in an enclosure that is separated through air by more than 0.8 mm (1/32 inch) from uninsulated live parts and more than 12.7 mm (1/2 inch) from arcing parts need not comply with the requirements in 8.2.1.

UL COPYRIGHTED MATERIAL –
NOT AUTHORIZED FOR FURTHER REPRODUCTION OR
DISTRIBUTION WITHOUT PERMISSION FROM UL

Documents
Document Sharing Hub

Copyright UL
Provided by IHS Markit under license with UL
No reproduction or networking permitted without license from IHS
Full document details: UL 2251 2017

Licensee=/, User=,
Not for Resale,

Table 8.1
Hot wire ignition (HWI) and high-current arc resistance to ignition (HAI) ratings of insulating materials

Flammability classification[a,d]	CTI		HWI[b]		HAI[c]	
	Voltage (V)	PLC	Mean ignition time (sec)	PLC	Mean no. of arcs	PLC
V-0, VTM-0	175 to 249	3	7 and up to 15	4	15 and up to 30	3
V-1, VTM-1	175 to 249	3	15 and up to 30	3	30 and up to 60	3
V-2, VTM-2	175 to 249	3	30 and up to 60	3	30 and up tp 60	3
HB	175 to 249	3	30 and up to 60	2	60 and up to 120	1

[a] Flammability Classification – described in Annex A, Ref. No. 17.
[b] Hot Wire Resistance to Ignition – described in Annex A, Ref. No. 18.
[c] High-Current Arc Resistance to Ignition – described in Annex A, Ref. No. 19.
[d] A material rated 5VA or 5VB which also carries a V-0 rating, shall apply the values for a V-0 rating. A material rated 5VA or 5VB with no additional V-0 rating shall apply the values for a V-1 rating.

8.3 Thermal properties

8.3.1 A polymeric material used for electrical insulation or enclosure of live parts shall have the relative thermal index ratings shown in Table 8.2 for the specific application of the insulating material. This requirement does not apply to epoxy potting materials.

Table 8.2
Minimum relative thermal indices of insulating materials used in insulation and enclosure applications

Application	Minimum relative thermal index[a], Degrees C		
	Electrical	Mechanical[b]	
		With impact	Without impact
ELECTRICAL INSULATION			
All devices	100	100	100
ENCLOSURE or parts of an ENCLOSURE			
A. All permanently wired devices and other devices containing fuses	100	100	100
B. All other devices	100	100	100

[a] Relative thermal index – Described in Annex A, Ref. No. 19. In Mexico and the US, for materials with other than VTM flammability classifications, the material shall be evaluated using specimen thickness of no more than the thickness employed in the end product or nominal 3.2 mm (1/8 inch) thickness, whichever is greater. In Canada, for materials with other than VTM flammability classifications, the material shall be evaluated using specimen thickness of no more than the thickness employed in the end product or nominal 1.6 mm (1/16 inch) thickness, whichever is greater.
[b] For filament wound tubing, industrial laminates, vulcanized fiber and similar polymeric materials, the minimum RTI for mechanical shall be the values specified for Electrical.

9 Protection against Corrosion

9.1 Parts of iron or steel other than stainless steel parts shall be protected against corrosion, in accordance with the Resistance to Corrosion Test, 50.

UL COPYRIGHTED MATERIAL –
NOT AUTHORIZED FOR FURTHER REPRODUCTION OR
DISTRIBUTION WITHOUT PERMISSION FROM UL
Documents
Document Sharing Hub

Copyright UL
Provided by IHS Markit under license with UL
No reproduction or networking permitted without license from IHS
Full document details: UL 2251 2017
Licensee=/, User=,
Not for Resale,

10 Enclosures

10.1 General

10.1.1 An enclosure shall be constructed so as to reduce the risk of unintentional contact with uninsulated live parts, see 13.1, and to provide internal parts with protection from specified external conditions.

10.2 Mechanical strength

10.2.1 An enclosure shall have adequate strength and rigidity for its intended use. It shall not permit any increase in shock or fire hazard due to total or partial collapse with resulting reduction in spacings, loosening, or displacement of parts, or other serious defects. See the Impact Test, 34, the Crush Test, 35, and the Vehicle Drive Over Test, 36.

10.3 Nonmetallic enclosures

10.3.1 An enclosure can be made of a polymeric material if the material and design have been investigated and found suitable for the purpose.

10.3.2 A nonmetallic enclosure or a nonmetallic part of an enclosure shall comply with the applicable requirements in Annex A, Ref. No. 20, except as modified by this Standard.

10.3.3 Among the factors taken into consideration when an enclosure is being judged are:

a) Mechanical strength in accordance with 10.2,

b) Moisture-absorptive properties in accordance with 8.1.2,

c) Combustibility in accordance with 8.1.3,

d) Resistance to distortion or physical damage at temperatures to which the material can be subjected under conditions of normal or abnormal usage in accordance with Accelerated Aging Tests, 25, and

e) Resistance to atmospheric effects - rain and sunlight in the case of a device intended for outdoor use - in accordance with 10.3.4.

For a nonmetallic enclosure all of these factors shall be considered with respect to thermal aging.

10.3.4 If a nonmetallic enclosure or a nonmetallic part of an enclosure is used on a device intended for use outdoors, the performance of the enclosure material shall not be adversely affected by water, exposure to UV, and other atmospheric effects. The enclosure shall comply with the requirements in Annex A, Ref. No. 20.

10.3.5 If a nonmetallic enclosure is identified as being intended to be exposed to specific chemicals, oils, acids, solvents, cleaning agents, and the like, the performance of the enclosure material shall not be adversely affected by such substances as determined by applicable tests as described in Annex A, Ref. No. 18.

UL COPYRIGHTED MATERIAL –
NOT AUTHORIZED FOR FURTHER REPRODUCTION OR
DISTRIBUTION WITHOUT PERMISSION FROM UL

Documents
Document Sharing Hub

Copyright UL
Provided by IHS Markit under license with UL
No reproduction or networking permitted without license from IHS
Full document details: UL 2251 2017

Licensee=/, User=,
Not for Resale,

10.3.6 Pliable, molded natural or synthetic rubber, or a combination thereof, or a pliable composition of which the basic constituent is vinyl chloride or a copolymer of vinyl chloride and vinyl acetate, in the finished device that complies with the Accelerated Aging Tests, 25, can be employed as an insulating material for the body of an EV plug, a vehicle connector, or EV breakaway coupling.

10.4 Metallic enclosures

10.4.1 Except as noted in 10.4.2, an enclosure can be constructed of iron, steel, copper, brass, bronze, zinc, or aluminum alloys containing not less than 80 percent aluminum. Magnesium or its alloys shall not be used.

10.4.2 Zinc or a zinc-based alloy shall not be used for an enclosure or parts of an enclosure which are in the primary grounding path.

10.4.3 Metallic enclosures shall have mechanical strength in accordance with 10.2.

10.5 EV plug, vehicle connector, and EV breakaway coupling enclosures

10.5.1 An EV plug, vehicle connector, or EV breakaway coupling shall not be provided with more than one cable-outlet hole, unless the additional holes are capable of being closed or do not expose live parts.

10.6 Environmental enclosures

10.6.1 An enclosure shall be marked with one or more enclosure type designations indicating the environmental conditions for which it is intended in accordance with 56.12. The enclosure shall comply with the requirements applicable to the enclosure type number or numbers. See Enclosure Tests for Environmental Protection, 54.

11 Current-Carrying Parts

11.1 Except as noted in 11.2 and 11.3, a current-carrying part shall be of silver, copper, or a copper alloy, or other material acceptable for the application. Plated iron or steel shall not be used for parts that are depended upon to carry current. Wire binding screws shall not be of iron or steel. Current carrying parts of contact shall comply with the requirements in Contacts, 18.

11.2 Stainless steel can be employed for a part not subject to arcing.

11.3 Pressure wire terminal screws can be made of plated iron or steel.

11.4 Iron or steel, if protected against corrosion by zinc, tin, or equivalent plating, can be used for screws, plates, yokes, or other parts that are employed as a means of clamping the conductor, providing such parts are not the primary current-carrying members.

11.5 Suitable means shall be provided for retaining live parts within such limits of alignment as to ensure that EV plugs will enter EV receptacles, vehicle connectors will enter vehicle inlets, and EV breakaway couplings will mate in the intended manner.

UL COPYRIGHTED MATERIAL –
NOT AUTHORIZED FOR FURTHER REPRODUCTION OR
DISTRIBUTION WITHOUT PERMISSION FROM UL

Documents
Document Sharing Hub

Copyright UL
Provided by IHS Markit under license with UL
No reproduction or networking permitted without license from IHS
Full document details: UL 2251 2017

Licensee=/, User=,
Not for Resale,

11.6 Uninsulated live parts shall be secured in place so that a reduction in the clearances and creepage distances below those required in 12.1 and 12.2 is not allowed.

11.7 A current-carrying part shall be prevented from turning relative to the surface on which it is mounted if such turning would adversely affect the performance of the device.

12 Clearances and Creepage Distances

12.1 Except as noted in 12.2, the clearances and creepage distances between field wiring terminals of opposite polarity, and the clearances and creepage distances between a field wiring terminal and any other uninsulated metal part (dead or live) not of the same polarity, shall not be less than 6.4 mm (1/4 inch).

12.2 If the field wiring terminals mentioned in 12.1 are intended for solder connections only, using solid or tinned stranded wire, the clearances and creepage distances between the terminals shall be as specified in Annex A, Ref. No. 21. See 56.10.2.

12.3 In all circuits other than at field wiring terminals, the acceptability of the clearances and creepage distances between an uninsulated live part and any other uninsulated metal part (dead or live) not of the same polarity shall be as specified in Annex A, Ref. No. 21.

12.4 The dead metal mentioned in 12.3 includes a metal surface (a metal face plate in the case of a flush receptacle) on which the device is mounted in the intended manner. A dead-metal screw head, rivet, or the like is not considered to be exposed to contact by persons after the device is installed in the intended manner, if it is located in a hole so that the dead metal cannot be contacted by the probe illustrated in Figure 13.1.

12.5 Clearances and creepage distances shall be measured in accordance with Annex A, Ref. No. 21. In determining the pollution degree and overvoltage category, the end-use application shall be considered and may modify those characteristics given in 12.8 and 12.9.

12.6 Clearances and creepage distances shall be measured in all conditions of use, both with and without mating devices of the intended configuration installed and any movable parts displaced to the position of a minimum spacing.

12.7 The clearances and creepage distances required in 12.1 shall be measured through air and over insulating and conductive surfaces with the device wired as intended with the maximum anticipated conductor size. They shall be measured from any point on the terminal that is able to contact the clamped conductor as in the case of a wire-binding-screw terminal, or from any point on the perimeter of an opening to receive a conductor in the case of an enclosed terminal.

12.8 The level of pollution expected or controlled for indoor use equipment shall be pollution degree 2. For outdoor use equipment, pollution degree 3 is expected, unless protection is afforded by a suitable enclosure appropriate for the installation in which case a lower pollution degree is capable of being achieved. Hermetically sealed or encapsulated enclosures shall be considered pollution degree 1.

UL COPYRIGHTED MATERIAL –
NOT AUTHORIZED FOR FURTHER REPRODUCTION OR
DISTRIBUTION WITHOUT PERMISSION FROM UL

Documents
Document Sharing Hub

Copyright UL
Provided by IHS Markit under license with UL
No reproduction or networking permitted without license from IHS
Full document details: UL 2251 2017

Licensee=/, User=,
Not for Resale,

12.9 Devices covered by this Standard shall be rated overvoltage Category II as defined in Annex A, Ref No. 21.

13 Accessibility of Live Parts

13.1 To reduce the likelihood of unintentional contact that could involve a risk of electric shock from uninsulated live parts, a live part shall not be contacted by the probe illustrated in Figure 13.1. See 13.5.

UL COPYRIGHTED MATERIAL –
NOT AUTHORIZED FOR FURTHER REPRODUCTION OR
DISTRIBUTION WITHOUT PERMISSION FROM UL

Documents
Document Sharing Hub

Copyright UL
Provided by IHS Markit under license with UL
No reproduction or networking permitted without license from IHS
Full document details: UL 2251 2017

Licensee=/, User=,
Not for Resale,

Figure 13.1
Articulate probe with web stop

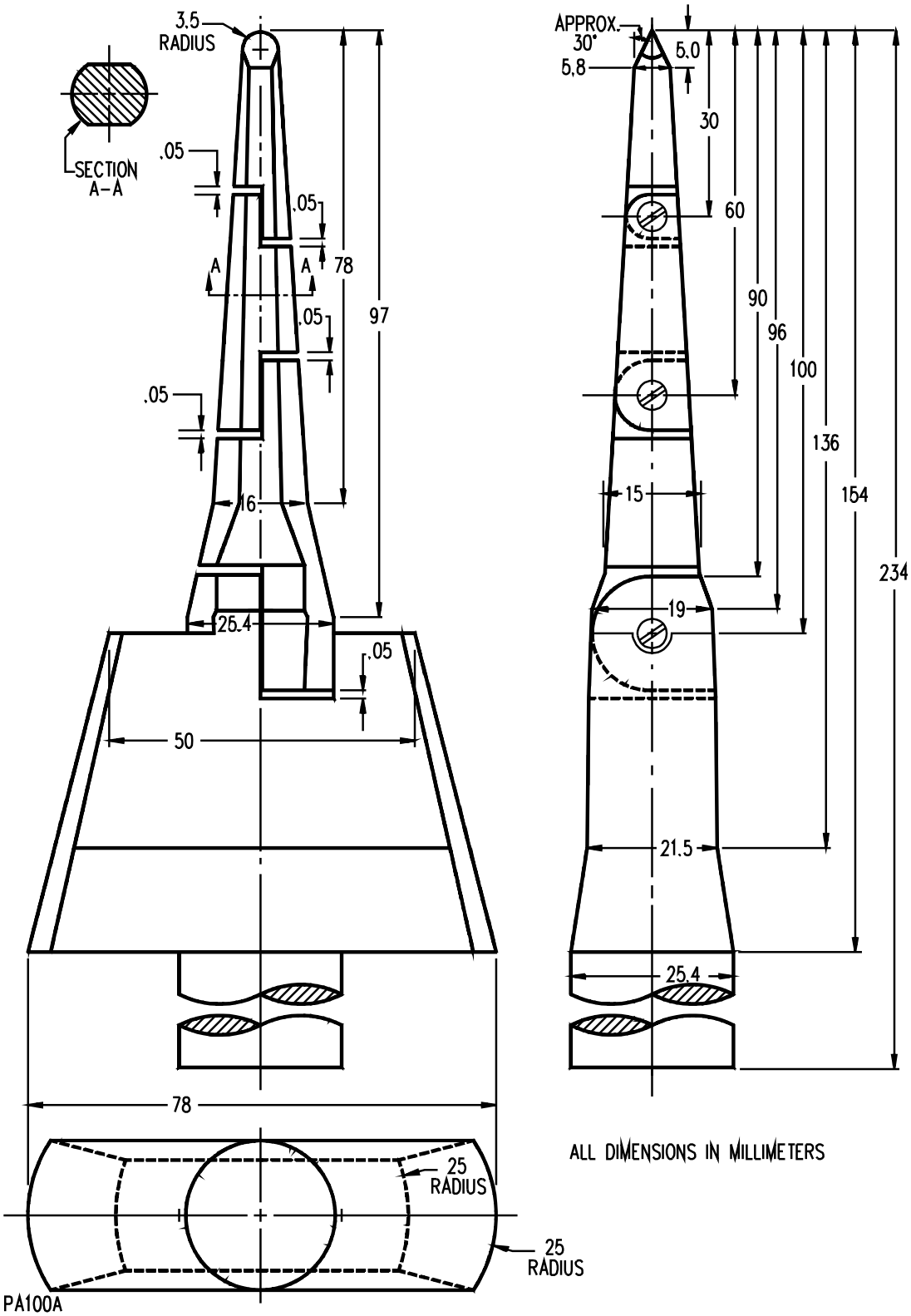

UL COPYRIGHTED MATERIAL –
NOT AUTHORIZED FOR FURTHER REPRODUCTION OR
DISTRIBUTION WITHOUT PERMISSION FROM UL

Documents
Document Sharing Hub

Copyright UL
Provided by IHS Markit under license with UL
No reproduction or networking permitted without license from IHS
Full document details: UL 2251 2017

Licensee=/, User=,
Not for Resale,

13.2 The probe illustrated in Figure 13.1 shall be applied to any depth that the recessing will permit; and shall be rotated, changed in configuration or angled before, during, and after application to any position that is necessary to examine the device.

13.3 The probe mentioned in 13.1 shall be used as a measuring instrument to judge the accessibility provided by the recessing and not as an instrument to judge the strength of a material; it shall be applied with a 13.3 N (3 lbf) force to determine accessibility.

13.4 During the examination of a product to determine whether it complies with the requirements in 13.1, the device shall be wired and assembled in accordance with the manufacturer's instructions. Any other part that is able to be opened or removed by the user without using a tool shall be opened or removed.

13.5 Mating devices shall not have exposed live contacts when fully mated or during engagement or withdrawal. Mating devices provided with a shroud to cover the contacts shall be examined to determine that the shroud enters the mating device before the contacts become energized.

13.6 Compliance with 13.5 shall be determined with the use of the probe shown in Figure 13.1 in every possible position. See 13.2.

14 Grounding

14.1 A device intended for use on a grounded system shall be of a grounding type and shall have a separate contact for interconnection of the equipment grounding conductor. A device intended for use on an isolated system shall comply with Isolation, 16, and this Clause shall not apply to that type of device.

14.2 Except as noted in 14.3 and 14.4, the equipment grounding terminal or lead and its corresponding pin or contact of a male device intended for permanent installation shall be conductively connected to the mounting means, housing, hood, enclosure, or other dead metal parts of a device that can come into contact with the equipment or vehicle enclosure.

14.3 The conductive connection need not be provided if the mounting means, housing, hood, or shell is constructed of an insulating material and the lack of ground continuity to the equipment enclosure is readily apparent.

14.4 In Mexico and the US, the conductive connection need not be provided if the device is marked in accordance with 56.3.1. In Canada, this does not apply.

14.5 A metal shell of a device that is used as the grounding contact member shall be as follows:

a) The surface of the shell that is depended upon for grounding continuity shall not be painted or otherwise subjected to conditions that could result in loss of grounding continuity;

b) One or more separate spring type components are incorporated to provide grounding path continuity;

c) The components are protected against damage; and

d) The shell complies with the requirements of the Grounding Path Current Test, 38.

UL COPYRIGHTED MATERIAL –
NOT AUTHORIZED FOR FURTHER REPRODUCTION OR
DISTRIBUTION WITHOUT PERMISSION FROM UL

Documents
Document Sharing Hub

Copyright UL
Provided by IHS Markit under license with UL
No reproduction or networking permitted without license from IHS
Full document details: UL 2251 2017

Licensee=/, User=,
Not for Resale,

14.6 The grounding contact shall be located and formed so that the path of electrical continuity to the grounding contact of the EV plug or vehicle connector and its mating device, or between halves of an EV breakaway coupling, is completed before continuity is established between any other contact and its respective contact on the mating device.

14.7 The grounding contact path, except for the metal housing or mounting, shall be of copper or a copper alloy or equivalent material. If a metal housing is a part of the primary equipment grounding path, it shall not be of zinc or a zinc-based alloy.

14.8 A copper-based alloy rivet which is used to hold parts together in the grounding-contact path or forms a part of the grounding path shall contain not less than 80 percent copper.

14.9 A connection in the grounding-contact path shall be secured by riveting, bolting, welding, or by an equivalent mechanical means of securement, capable of complying with the requirements of the Grounding Path Current Test, 38.

14.10 In mating devices provided with an equipment-grounding contact, the grounding contact shall not be capable of touching a line-side phase contact, independent of any polarization feature of the enclosure. Such devices shall comply with the requirements of the Polarization Integrity Test, 49.

14.11 All exposed non-current-carrying metal parts of a device that are likely to become energized shall be conductively connected to the equipment ground.

14.12 Grounding and other dead metal parts shall be secured in place so that a reduction in spacings below those required in 12.1 is not allowed.

15 Grounding Connections

15.1 The grounding conductors of a device shall be sized as indicated in Table 15.1, but shall not be required to be larger than the circuit conductors providing power to the vehicle.

Table 15.1
Minimum acceptable sizes of grounding conductors

Device rating, amperes (Not exceeding)	Copper grounding conductors[a,b,c]	
	AWG	mm^2
15	14	2.08
20	12[b]	3.31
30	10	5.26
40	10	5.26
60	10	5.26
100	8	8.37
200	6	13.3
300	4	21.2
400	3	26.7
500	2	33.6
600	1	42.4
800	1/0	53.5

[a]In Mexico, the metric cross-sectional area is mandatory. In Canada and the US, the metric cross-sectional area is optional.
[b]In Canada, the minimum acceptable sizes of grounding conductors are 14 AWG for 20A rated devices and 12 AWG for 30A rated devices. In Mexico and the US, the requirements of the table apply.

UL COPYRIGHTED MATERIAL –
NOT AUTHORIZED FOR FURTHER REPRODUCTION OR
DISTRIBUTION WITHOUT PERMISSION FROM UL

Table 15.1 Continued on Next Page

Documents
Document Sharing Hub

Copyright UL
Provided by IHS Markit under license with UL
No reproduction or networking permitted without license from IHS
Full document details: UL 2251 2017

Licensee=/, User=,
Not for Resale,