UL 231

STANDARD FOR SAFETY

Power Outlets

Documents
Document Sharing Hub

Documents
Document Sharing Hub

Full document details: UL 231 2025

UL Standard for Safety for Power Outlets, UL 231

Eleventh Edition, Dated July 22, 2025

Summary of Topics

This publish of ANSI/UL 231 replaces the previously published document of the same date, July 22, 2025, due to an editorial correction in 14.2, updating the power outlet marking to "Suitable for recreational vehicle site supply equipment".

This new Eleventh Edition of ANSI/UL 231 dated July 22, 2025 includes the following changes in requirements:

– Clarification of Receptacle Requirement for Marina and Boatyards; Table 10.1

– Disconnecting Means for Power Outlets Marked as RV Site Supply Equipment; 14.1 – 14.3

– Editorial Updates; Sections 2 – 4, 12.1.7, Section 21

The new and revised requirements are substantially in accordance with Proposal(s) on this subject dated March 28, 2025.

All rights reserved. No part of this publication may be reproduced, stored in a retrieval system, or transmitted in any form by any means, electronic, mechanical photocopying, recording, or otherwise without prior permission of ULSE Inc. (ULSE).

ULSE provides this Standard "as is" without warranty of any kind, either expressed or implied, including but not limited to, the implied warranties of merchantability or fitness for any purpose.

In no event will ULSE be liable for any special, incidental, consequential, indirect or similar damages, including loss of profits, lost savings, loss of data, or any other damages arising out of the use of or the inability to use this Standard, even if ULSE or an authorized ULSE representative has been advised of the possibility of such damage. In no event shall ULSE's liability for any damage ever exceed the price paid for this Standard, regardless of the form of the claim.

Users of the electronic versions of UL's Standards for Safety agree to defend, indemnify, and hold ULSE harmless from and against any loss, expense, liability, damage, claim, or judgment (including reasonable attorney's fees) resulting from any error or deviation introduced while purchaser is storing an electronic Standard on the purchaser's computer system.

Documents
Document Sharing Hub

Full document details: UL 231 2025

No Text on This Page

Documents
Document Sharing Hub

JULY 22, 2025

ANSI/UL 231-2025

UL 231

Standard for Power Outlets

First Edition – February, 1967
Second Edition – June, 1970
Third Edition – November, 1972
Fourth Edition – May, 1977
Fifth Edition – September, 1982
Sixth Edition – September, 1988
Seventh Edition – May, 1994
Eighth Edition – June, 1998
Ninth Edition – August, 2008
Tenth Edition – October, 2016

Eleventh Edition

July 22, 2025

This ANSI/UL Standard for Safety consists of the Eleventh Edition.

The most recent designation of ANSI/UL 231 as an American National Standard (ANSI) occurred on July 22, 2025. ANSI approval for a standard does not include the Cover Page, Transmittal Pages, and Title Page.

Comments or proposals for revisions on any part of the Standard may be submitted to ULSE at any time. Proposals should be submitted via a Proposal Request in the Collaborative Standards Development System (CSDS) at https://csds.ul.com.

Our Standards for Safety are copyrighted by ULSE Inc. Neither a printed nor electronic copy of a Standard should be altered in any way. All of our Standards and all copyrights, ownerships, and rights regarding those Standards shall remain the sole and exclusive property of ULSE Inc.

© 2025 ULSE Inc. All rights reserved.

Documents
Document Sharing Hub

Full document details: UL 231 2025

No Text on This Page

Documents
Document Sharing Hub

Full document details: UL 231 2025

CONTENTS

INTRODUCTION

1 Scope 7
2 Components 7
3 Units of Measurement 8
4 Referenced Publications 8
5 Glossary 9

CONSTRUCTION

6 General 10
7 Enclosure 11
7.1 General 11
7.2 Enclosure of switches and circuit breakers 14
7.3 Enclosure of fuses 17
7.4 Opening for cord 17
7.5 Nonmetallic enclosures 17
7.6 Dead front 18
7.7 Doors and covers 18
7.8 Meter socket base 20
7.9 Ventilation openings 21
8 Connections for Wiring Systems 23
9 Mounting Posts and Pedestals 24
9.1 General 24
9.2 Cover 24
9.3 Electrical connections 24
9.4 Wire opening 25
9.5 Bonding 25
9.6 Overlap 25
9.7 Instructions 25
9.8 Pedestal 25
10 Wiring Devices 25
10.1 General 25
10.2 Receptacles 25
10.3 Operating mechanism 30
10.4 Switches 31
10.5 Ground-fault circuit-interrupter (GFCI) protection for personnel and ground-fault protection of equipment (GFPE) 31
11 Insulating Material 32
12 Current-Carrying Parts 34
12.1 General 34
12.2 Terminals 38
12.3 Spring washers 40
13 Service Equipment Use 41
13.1 General 41
13.2 Mobile home service equipment 42
14 Disconnecting Means 42
15 Alternate Source Switching Means 43
16 Overcurrent Protection 43
17 Spacings 44
17.1 General 44
17.2 Insulating barriers 47
18 Wiring Space 50

Documents
Document Sharing Hub
Full document details: UL 231 2025

18.1 General....50
18.2 Wire-bending space....52
18.3 Barriers....54
18.4 Bushings....55
19 Grounding and Bonding....55
19.1 Ground bus....55
19.2 Terminal for neutral service conductor....57
19.3 Grounding electrode conductor terminal....57
19.4 Main bonding jumper....57
19.5 Grounding electrode conductor and main bonding jumper when sub-feed terminals are provided....58
19.6 Equipment grounding terminal for 100-ampere rated mobile home....58
19.7 Receptacle grounding....59
19.8 Bonding....59
19.9 Bonding means for metallic conduit....59
19.10 Grounding and bonding connections....60
20 Luminaires....60
21 Short Circuit Currents....62

PERFORMANCE

22 Bonding Resistance and Conductor Tests....63
22.1 Plug-in grounding means....63
22.2 Reduced size bonding conductor....63
22.3 Bonding connection....64
23 Strength Test of Insulating Base and Support....64
24 External Operating Mechanism Test....65
25 Rain and Splash Test....65
25.1 General....65
25.2 Test description....65
26 Spray Test....69
27 Dielectric Test of Clamped Joint....69
28 Dielectric Voltage-Withstand Test....69
29 Short-Circuit Current Test....69
29.1 General....69
29.2 Testing of receptacles....70
29.3 Short circuit procedure....70
29.4 Evaluation of test results....70
30 Conduit Connection Tests....71
30.1 General....71
30.2 Pullout....71
30.3 Torque....71
30.4 Bending....71
30.5 Knockouts....72
31 Short Time Fault Current Test....72
32 Torque Deformation Test....73
33 Beam Loading Deflection Test....75

RATINGS

34 General....75
35 Current....76
36 Short Circuit Current....76
37 Voltage....77

Documents
Document Sharing Hub
Full document details: UL 231 2025

MARKINGS

38 Details 77
39 Permanence of Marking 89

INSTALLATION INSTRUCTIONS

40 Mounting in Concrete 89
41 Mounting of Marina Type Equipment 89

Documents
Document Sharing Hub
Full document details: UL 231 2025

No Text on This Page

Documents
Document Sharing Hub

Full document details: UL 231 2025

INTRODUCTION

1 Scope

1.1 These requirements cover power outlets, with or without integral mounting posts or pedestals, and power outlet fittings for use in accordance with NFPA 70®, *National Electrical Code*® (NEC®).

NFPA 70®, *National Electrical Code*®, and NEC® are registered trademarks of the National Fire Protection Association, Quincy, MA.

1.2 A power outlet covered by these requirements, although not restricted to such use, is intended for use:

a) At outdoor locations such as on farms, at building sites, and the like, where power is required to operate portable, mobile, or temporarily installed equipment;

b) To supply power to a mobile home or a recreational vehicle; and

c) To supply shore power to boats.

1.3 A power outlet may contain:

a) Attachment plug receptacles;

b) Circuit breakers;

c) Fuseholders;

d) Fused switches and facilities for watt-hour meters; and

e) Provisions for field installed circuit breakers or switches and fuses.

1.4 Power outlet fittings covered by these requirements are intended for factory or field assembly into or in conjunction with power outlets designed for such assembly. Fittings may be panels or combination units incorporating receptacles, disconnecting means, overcurrent protection or other devices that have been determined to be equivalent. A separable mounting post or pedestal to which power outlets are to be mounted is also a fitting.

1.5 In addition to or instead of mounting to a post or pedestal fitting as mentioned in 1.4, a power outlet may be constructed for mounting on and connection to a mounting post or pedestal also designed to be used with other types of distribution equipment.

1.6 Some power outlets may have special features and markings to indicate their acceptability for use as service equipment.

1.7 A power outlet with a mounting post is intended for mounting in concrete. A power outlet with a mounting pedestal is intended for mounting on a concrete slab. Unless marked otherwise, a mounting post or pedestal fitting is not intended to serve as the sole support of a mast for overhead wiring.

2 Components

2.1 A component of a product covered by this Standard shall:

a) Comply with the requirements for that component as specified in this Standard;

b) Be used in accordance with its rating(s) established for the intended conditions of use; and

AVA Documents
Document Sharing Hub
Full document details: UL 231 2025

c) Be used within its established use limitations or conditions for acceptability.

2.2 A component of a product covered by this Standard is not required to comply with a specific component requirement that:

a) Involves a feature or characteristic not required in the application of the component in the product;

b) Is superseded by a requirement in this Standard; or

c) Is separately evaluated when forming part of another component, provided the component is used in accordance with its established ratings and limitations.

2.3 Specific components are incomplete in construction features or restricted in performance capabilities. Such components are intended for use only under limited conditions, such as certain temperatures not exceeding specified limits, and shall be used only under those specific conditions.

2.4 A component that is also intended to perform other functions such as overcurrent protection, ground-fault circuit-interruption, surge suppression, any other similar functions, or any combination thereof, shall comply additionally with the requirements of the applicable standard(s) that cover devices that provide those functions.

3 Units of Measurement

3.1 Values stated without parentheses are the requirement. Values in parentheses are explanatory or approximate information.

3.2 Unless otherwise indicated, all voltage and current values mentioned in this Standard are root-mean-square (rms).

4 Referenced Publications

4.1 Any undated reference to a code or standard appearing in the requirements of this Standard shall be interpreted as referring to the latest edition of that code or standard.

4.2 The following publications are referenced in this Standard:

ASME B1.1, *Unified Inch Screw Threads (UN, UNR, and UNJ Thread Forms)*

NEMA WD 6, *Wiring Devices – Dimensional Specifications*

NFPA 70®, *National Electrical Code®* (NEC®)

UL 50, *Enclosures for Electrical Equipment, Non-Environmental Considerations*

UL 50E, *Enclosures for Electrical Equipment, Environmental Considerations*

UL 67, *Panelboards*

UL 94, *Test for Flammability of Plastic Materials for Parts in Devices and Appliances*

UL 486A-486B, *Wire Connectors*

Documents
Document Sharing Hub

Full document details: UL 231 2025

UL 486E, *Equipment Wiring Terminals for Use with Aluminum and/or Copper Conductors*

UL 498, *Attachment Plugs and Receptacles*

UL 514B, *Conduit, Tubing, and Cable Fittings*

UL 514D, *Cover Plates for Flush-Mounted Wiring Devices*

UL 746A, *Polymeric Materials – Short Term Property Evaluations*

UL 746C, *Polymeric Materials – Use in Electrical Equipment Evaluations*

UL 869A, *Service Equipment*

UL 943, *Ground-Fault Circuit-Interrupters*

UL 1053, *Ground-Fault Sensing and Relaying Equipment*

UL 4248-1, *Fuseholders – Part 1: General Requirements*

UL 4248-12, *Fuseholders – Part 12: Class R*

UL 4248-15, *Fuseholders – Part 15: Class T*

5 Glossary

5.1 For the purposes of these requirements, the following definitions shall apply.

5.2 COVER – An unhinged, removable covering part.

5.3 DOOR – A hinged, sliding, or similarly attached covering part that can be removed only by the use of a tool.

5.4 FILLED OPENING – An opening that has been closed with a filler plate.

5.5 FILLER PLATE – A part intended for closing an opening that would otherwise be closed by subsequent installation of a circuit breaker or other device.

5.6 KNOCKOUT – A factory closed opening with a nonreplaceable closure provided for subsequent installation of a:

a) Conduit;

b) Circuit breaker;

c) Other device; or

d) Wiring system.

5.7 LOOP FEED – An installation arrangement whereby an electrical supply circuit is wired in series to a string of power outlets. In this arrangement, the supply circuit conductors connect to the power outlet and then continue on to the next power outlet in the loop. Each power outlet is connected to the loop feed by means of a tap conductor.

AVA Documents
Document Sharing Hub

Full document details: UL 231 2025

5.8 RESTRICTING BARRIER – A barrier used to prevent the entry of rain or direct access to a live part through a ventilation opening in the enclosure.

CONSTRUCTION

6 General

6.1 A power outlet shall not have provision for the mounting of additional receptacles unless the receptacles are part of a power outlet fitting.

6.2 A knockout or filled opening may be provided in a power outlet only if intended to accommodate:

a) A circuit breaker or fused switch;

b) A combination unit as described in 6.6; or

c) Specific additional equipment that has been determined to be equivalent.

6.3 A knockout or filled opening that is intended to accommodate a receptacle shall not be used in a power outlet or power outlet fitting.

6.4 A panel (power outlet fitting) shall not require the use of a tool or the provision of wiring for connecting the supply or ground. The grounding connection shall comply with 19.8.1.

Exception No. 1: A metal dead front or cover that does not include a receptacle may be grounded by the mounting screws.

Exception No. 2: A panel (power outlet fitting) marked as noted in 38.77 may be constructed such that the use of a tool or the provision of wiring is required for connecting the supply or ground.

6.5 A mounting means shall be provided for connecting:

a) A panel to a power outlet; and

b) A power outlet to a mounting post or pedestal.

Such means shall be determined for equivalence in security to that provided by four machine screws.

Exception: A panel that is not more than 6 inches (152 mm) in width or length may be secured with two machine screws.

6.6 A combination unit (power outlet fitting) consisting of a receptacle and overcurrent protection and intended to be field or factory installed in a power outlet shall not require the use of a tool or the provision of wiring for effecting supply and grounding connections and shall be provided with a mounting means at the receptacle that does not depend solely upon the plug-in connection. The grounding connection shall comply with 19.8.1.

Exception No. 1: A metal cover that is not part of the grounding path for a receptacle may be grounded by the mounting screws.

Exception No. 2: A combination unit (power outlet fitting) marked as noted in 38.77 may be constructed such that the use of a tool or the provision of wiring is required for connecting the supply or ground.

Documents
Document Sharing Hub
Full document details: UL 231 2025

6.7 Field installation of an individual circuit breaker or fused switch in a power outlet shall not require the use of a tool or the provision of wiring in making supply connections directly to the circuit breaker or switch and shall be intended only for field connection to a permanently wired load circuit.

6.8 A circuit breaker or fused switch intended for field connection to a permanently wired load circuit shall be mounted to the panel dead front only if all electrical connections to the panel are made by stabs and jaws.

6.9 A power outlet or panel (power outlet fitting) with provision for the field installation of additional circuit breakers or fused switches shall contain a dead front with filled openings or knockouts for the circuit breaker handles or fused switches that will cover all wiring and live parts.

6.10 A power outlet marked for use with a power outlet fitting described in 6.4, 6.6, and 6.9 shall be shipped:

a) With a power outlet fitting installed;

b) With a dead front having knockouts or filled openings for the field installation of additional circuit breakers or fused switches; or

c) With a blank dead front without knockouts or openings for circuit breakers or fused switches that will cover all wiring and live parts and prevent the entrance of rain above live parts.

6.11 A filler plate shall be judged according to UL 67. Marking requirements for dead fronts using filler plates are contained in 38.31.

6.12 A power outlet intended for mounting to a separable field-installed mounting post or pedestal may be provided with an opening for the mounting post or pedestal. If the power outlet can be mounted so that field-installed conduit could interfere with access to field-wiring terminals, the mounting post shall be marked in accordance with 38.29.

7 Enclosure

7.1 General

7.1.1 Unless specified otherwise in this Standard, a metallic enclosure shall comply with UL 50. A non-metallic enclosure shall comply with 7.5.1 and 7.5.2. Provisions for a conduit hub need not be provided if the enclosure is marked in accordance with 38.52.

7.1.2 A power outlet, including any external operating mechanism, such as for a disconnect, mounted on or through the enclosure shall withstand the environmental tests specified in UL 50E, for the enclosure type marked in accordance with 38.2. The enclosure type selected from UL 50E shall be a type that is suitable for outdoor use.

7.1.3 A power outlet marked in accordance with 38.2 with a Type 3S or Type 3SX enclosure designation and provided with an external operating mechanism shall be capable of supporting the weight of any ice build-up, being operated as intended, and withstanding removal of the ice by a tool or auxiliary means to gain access to the interior of the enclosure. Determination of these characteristics is to be made in accordance with 24.1 for each maintained position of the external operating mechanism.

7.1.4 Internal wiring and live parts, other than those associated with exposed parts of fuseholders and receptacles, shall not be exposed during fuse replacement or insertion or removal of attachment plugs as specified in 16.11.

Documents
Document Sharing Hub
Full document details: UL 231 2025

7.1.5 In addition to withstanding the environmental tests as specified in 7.1.2, the enclosure shall be constructed to withstand beating rain and splashing water as determined by application of the requirements specified in the Rain and Splash Test, Section 25. The Rain and Splash Test in Section 25 replaces the Rain Test requirements from UL 50E. A power outlet marked for marine use, shall additionally be subjected to the Spray Test, Section 26. If there is an opening for a ringless type meter without a viewing pane in front of the meter, the enclosure shall be provided with a permanent structural system to channel any accumulation of water to the outside of the enclosure. During the tests specified in the Rain and Splash Test, Section 25, and the Spray Test, Section 26, a meter having the dimensions specified in Figure 7.1 shall be installed in place.

Figure 7.1

Dimensions of Test Meter

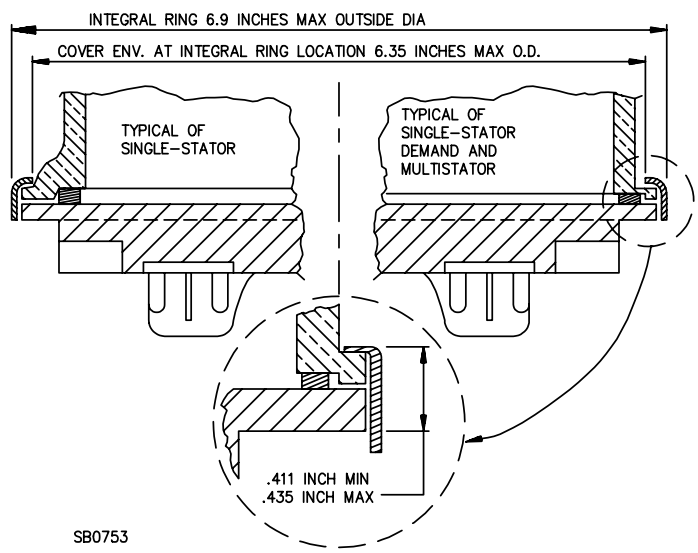

inches	(mm)
6.9	(175)
6.35	(161)
0.411	(10.4)
0.435	(11.0)

7.1.6 A receptacle or circuit breaker, including a handle opening, that is located in the bottom end wall of the enclosure shall be shielded by an extension of each side of the enclosure. The shielding shall extend a minimum of 1/2 inch (12.7 mm) below the face of any receptacle or circuit breaker (excluding the handle).

Exception: A minimum of 1/8 inch (3.2 mm) extension of any side of the enclosure may be provided if no part of a receptacle or circuit breaker face is closer that 1 inch (25.4 mm) to that vertical side of the enclosure.

7.1.7 The various parts of a power outlet as covered in these requirements are illustrated in Figure 7.2.

Documents
Document Sharing Hub
Full document details: UL 231 2025

Figure 7.2

Typical Power Outlet Construction Features

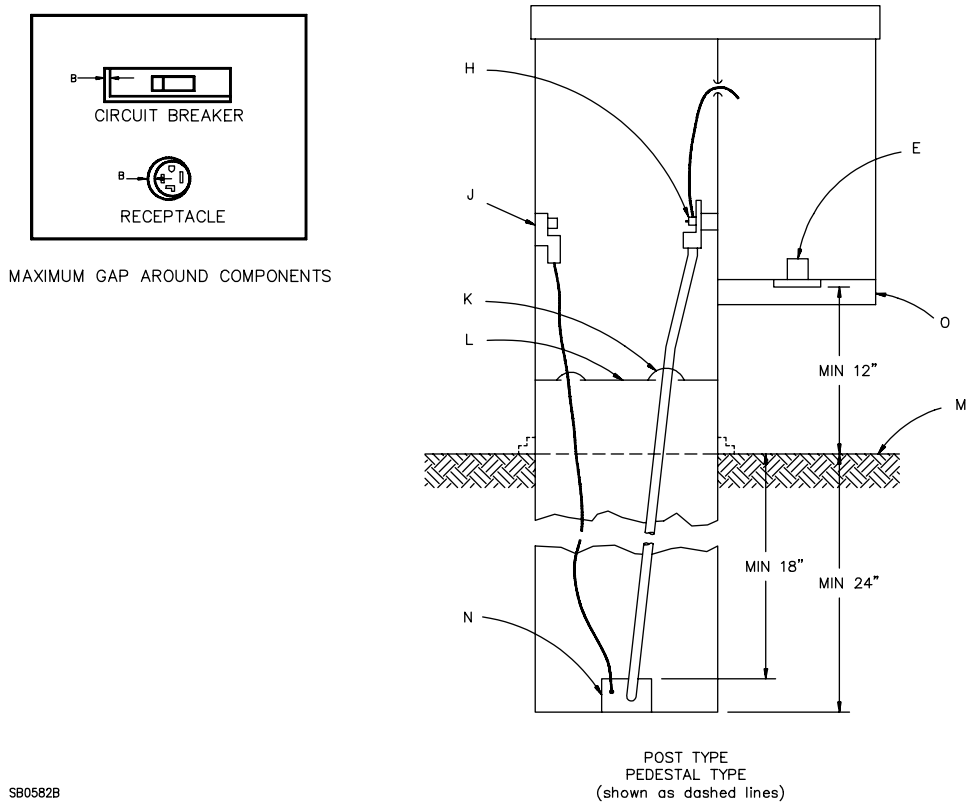

A – Maximum 1/8-inch (3.2-mm) gap, top of dead front to edge of open door (see 7.6.7).
B – Maximum gap 3/32 inch (2.4 mm) each side (maximum 1/8 inch total) between component and edge of opening in dead front, or between dead front and wall of enclosure (see 7.6.3 and 7.6.8).

C – Fuseholder in compartment (see 7.3.2).

D – Barrier (see 7.3.3).

E – Receptacle.

F – 1- by 1-inch (25.4- by 25.4-mm) end wall extension (see 7.6.5).

G – 1/2-inch (12.7-mm) wall extension (see 7.6.5).

H – Line terminals (see 9.3.1 and 12.2.1).

J – Enclosure grounding terminal (see 9.3.1).

K – Sealing material, applied during installation (Optional).

L – Sealing provision (Optional).

M – Marked grade level (see 38.13).

N – Conductor entrance (see 9.4.1).

O – Receptacle or circuit breaker rain shield extension (see 7.1.6).

P – Distance between a receptacle or a live part and grade level (see 9.3.1 and 14.7).

Documents
Document Sharing Hub
Full document details: UL 231 2025

7.1.8 Means for mounting shall be external to the enclosure.

Exception No. 1: A metal enclosure designated as Type 3R or Type 3RX may be provided with internal means for mounting consisting of no more than two openings above the level of any live part or any terminal for a neutral or grounding conductor. More openings may be provided if all such openings:

a) Are closed at the factory; and

b) While in the as-received condition, exclude water when subjected to the test described in the Rain and Splash Test, Section 25.

Exception No. 2: Internal mounting means may be provided in a nonmetallic enclosure if the construction is in accordance with Exception No. 1 and if means to reduce the risk of contact between internal conductors and the mounting means is provided in accordance with 7.1.9.

7.1.9 To reduce the risk of contact between a supporting screw and conductors within an enclosure as required in Exception No. 2 to 7.1.8, a hole in an enclosure for a screw shall be located in a recess constructed so that there will be a spacing of not less than 1/32 inch (0.8 mm) between the plane of the top of the recess and the head of the largest screw that is provided with the enclosure. If a screw is not provided with the enclosure, this spacing shall be measured using the largest round-head screw, as specified in Table 7.1, that can be inserted in a hole that is not chamfered; or the largest flat-head screw that can be inserted in a hole that is chamfered.

Table 7.1
Supporting Screw Hole Dimensions

Nominal screw size	Diameter of hole		Minimum dimensions of recess			
			Diameter		Depth	
	inch	(mm)	inch	(mm)	inch	(mm)
6	0.138	(3.51)	1/4	(6.4)	4/32	(3.2)
8	0.164	(4.17)	19/64	(7.5)	9/64	(3.6)
10	0.190	(4.83)	11/32	(8.7)	5/32	(4.0)
12	0.216	(5.49)	25/64	(9.9)	11/64	(4.4)
1/4	0.250	(6.35)	29/64	(11.5)	13/64	(5.2)
5/16	0.313	(7.95)	9/16	(14.2)	15/64	(6.0)

7.1.10 In a power outlet marked for marina and boatyard use, internal mounting holes located above live parts shall be gasketed.

7.1.11 There shall be provision for drainage of the enclosure. In a mounting post the drain hole shall be located directly above the moisture seal and shall drain to the outside.

7.1.12 An edge, projection, or corner of an enclosure, opening, frame, guard, knob, handle, or the like of a power outlet shall not be sufficiently sharp to constitute a risk of injury to persons during intended use or user maintenance.

7.1.13 Metals shall not be used in such combination as to cause galvanic action that will affect adversely any part of the device.

7.2 Enclosure of switches and circuit breakers

7.2.1 A switch or circuit breaker shall be operable from outside the enclosure.

Documents
Document Sharing Hub
Full document details: UL 231 2025

Exception: A switch or circuit breaker may be located behind a door if live parts or wiring are not exposed during operation.

7.2.2 An enclosure involving a pull-out switch member shall completely enclose any part that may be live when a hinged pull-out switch member is in the closed position or when the door over a detachable pull-out member is closed. A pull-out switch member shall be designed so that no live part will be exposed to unintentional contact with the operator when the pull-out switch member is in any position.

7.2.3 The accessibility of a live part with respect to unintentional contact as mentioned in 7.2.2 is evaluated with reference to any actual operating condition and with the pull-out member tilted at any angle at which it can be inserted. If the protection of a live part against unintentional contact is accomplished by means of a shield, barrier, or the like, that may be moved or deflected under pressure so as to affect either the width of the opening or the recessing of the live part, the dimensions specified are to be investigated with pressure applied.

7.2.4 A live part is not considered to be exposed to unintentional contact if it is recessed or set back 1/8 inch (3.2 mm) or more from the plane of an opening having at least one dimension not greater than 3/8 inch (9.6 mm), as shown in Figure 7.3. If the recessing or set-back is more than 1/8 inch, a larger opening may be used if the construction provides protection against unintentional contact with the live part and has been determined to be at least equivalent to that just described.

Figure 7.3

Recessing of Live Parts

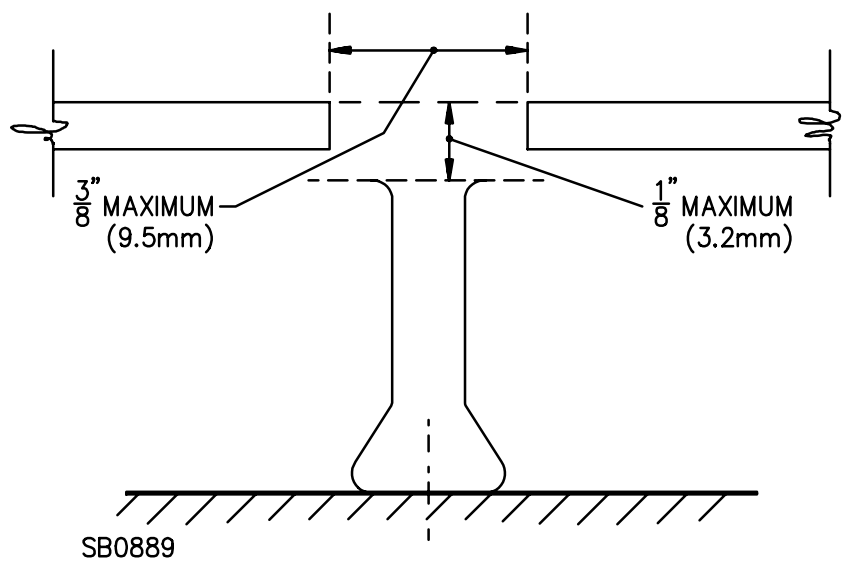

inch	(mm)
3/8	(9.5)
1/8	(3.2)

7.2.5 With respect to Figure 7.4, the dimensions specified in 7.2.4 apply also to live parts on a pull-out switch member.

Exception: The blades or other current-carrying parts may be recessed or set back less than 1/8 inch (3.2 mm) if their exposure while live is not more than 1/8 inch.

Documents
Document Sharing Hub
Full document details: UL 231 2025

Figure 7.4

Recessing of Pull-Out Switch

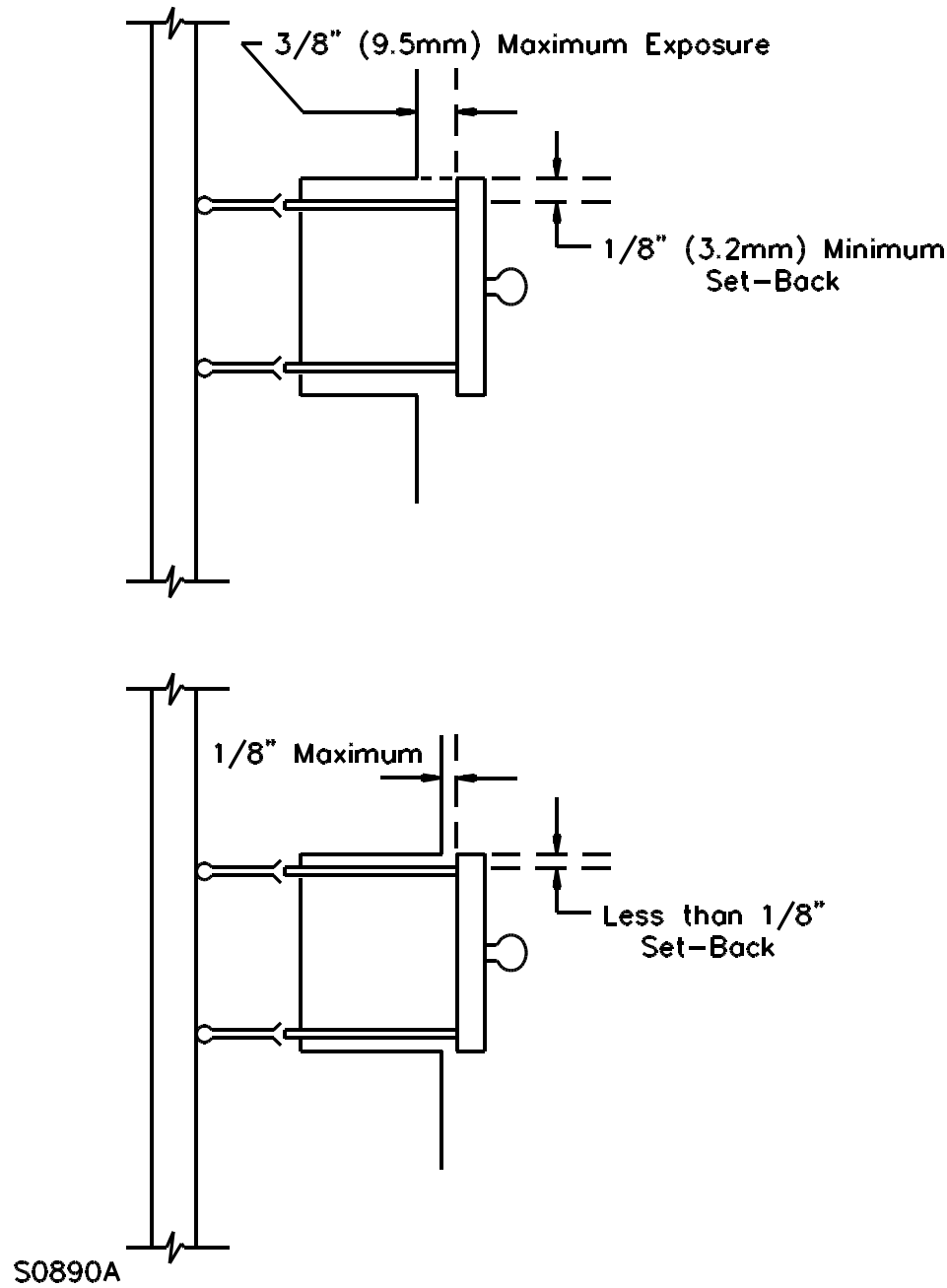

Documents
Document Sharing Hub
Full document details: UL 231 2025

7.2.6 The enclosure of a power outlet not employing a pull-out switch member shall completely enclose all parts that may be live regardless of any switch position.

7.2.7 The enclosure described in 7.2.6 shall not have any open hole or slot to provide for movement of an operating handle.

Exception: An opening may be provided for a closely fitting operating handle if the opening is closed when the handle is in the operating position, and the clearance between the edge of the hole and the handle does not exceed 3/32 inch (2.4 mm) on either side (one side only) and 1/8 inch (3.2 mm) total (both sides). The clearances are measured with the handle in the on and off positions, but with the handle and its supporting member assembled in any position that results from ordinary factory assembly.

7.2.8 A power outlet shall be designed so that during the installation of circuit breakers or fused switches and panels as mentioned in 6.4 and 6.7, the exposure of live parts shall not be greater than necessary to permit the installation of the number of circuit breaker or fused switch poles for which the assembly is intended.

7.2.9 No live parts other than load and neutral terminals shall be exposed to unintentional contact by the installer during the wiring of permanently installed load circuits.

7.3 Enclosure of fuses

7.3.1 A fuse, fuseholder, or fusible switch shall be located inside an enclosure but shall be accessible for fuse replacement.

7.3.2 The portion of the enclosure containing any component described in 7.3.1 shall be closed off by a barrier of at least 0.053-inch (1.35-mm) thick sheet steel, or that which has been determined to be equivalent for polymeric materials, from that space behind a door containing any opening such as for cord passage.

7.3.3 With respect to 7.3.2, a joint between the barrier and the adjacent dead front, enclosure door, and sides need not be flanged, but shall have as close a fit as practicable. With the door fully closed a maximum 1/16-inch (1.6-mm) gap may exist between adjacent flat surfaces, or a maximum 3/32-inch (2.4-mm) gap between adjacent curved surfaces.

7.4 Opening for cord

7.4.1 A power outlet that will require the passage of flexible cord from an interior receptacle to supply an external load shall be provided with one or more smooth openings in the bottom of the enclosure or the door. The door shall close completely with all cords and plugs in place.

7.5 Nonmetallic enclosures

7.5.1 A nonmetallic enclosure shall comply with the requirements for outdoor nonmetallic enclosures for fixed equipment specified in UL 746C. However, with regard to the reference to Table 8.1 in 6.1 of UL 746C, the electrical properties shall be those applicable to indirect support material as specified in 11.1 and Table 11.1 and Table 11.2. The relative thermal index shall be equal to or greater than the sum of 40 °C (72 °F) and the temperature rise on the enclosure during a temperature test; or, if a temperature test is not conducted, the relative thermal index shall be at least 80 °C (176 °F). The oven temperature for the mold stress test shall be equal the maximum use temperature [40 °C (104 °F) plus the temperature rise] plus 10 °C (50 °F) but not less than 70 °C (158 °F); or, if a temperature test is not conducted, the oven temperature shall be 90 °C (194 °F).

Documents
Document Sharing Hub
Full document details: UL 231 2025

Exception: Compliance with the requirements in Enclosure Flammability – Large Surface Area Considerations of UL 746C is not required.

7.5.2 A nonmetallic enclosure intended for connection to a rigid conduit system shall be subjected to the tests described in the Conduit Connection Tests, Section 30.

7.6 Dead front

7.6.1 A dead front supporting no components shall have a thickness not less than:

a) 0.032 inch (0.81 mm), excluding coatings, if of steel; or

b) 0.050 inch (1.27 mm) if of aluminum.

7.6.2 A dead front supporting components shall comply with the general enclosure requirements specified in 7.1.1 – 7.1.13.

7.6.3 A dead front with or without a 1/2-inch (12.7-mm) integral flange shall form a close fit with the walls (sides and bottom) of the enclosure [within 3/32 inch (2.4 mm) on bottom or either side (one side only) and 1/8 inch (3.2 mm) total on sides (both sides) with the dead front assembled in any intended position] or shall overlap a flange, projection, or that which has been determined to be equivalent, on the enclosure walls so that no direct opening into the area behind the dead front will result.

7.6.4 A dead front is a panel used behind a door (that may have openings for the passage of cords) to cover wiring and uninsulated live parts that would otherwise be exposed. Portions of a component involving mechanical operation (handles of circuit breakers or switches, fuseholders, and receptacle faces) may project through the dead front.

7.6.5 If a door has an opening for cord passage, and the dead front is not constructed with the 1/2-inch (12.7-mm) flange and does not overlap a flange on the enclosure walls as specified in 7.6.3, the bottom end wall of the enclosure shall extend horizontally forward from the dead front. The extension shall be at least 1/2 inch at all points, but at the bottom end of each side wall the extension shall be at least 1 inch (25.4 mm) for a distance of 1 inch from each side wall.

7.6.6 The 1/2-inch (12.7-mm) horizontal dimension referred to in 7.6.5 may be reduced to a value of 3/8 inch (9.6 mm) at a cord opening if the edge of such an opening is turned up a minimum of 1/8 inch (3.2 mm).

7.6.7 A dead front shall form a close fit that is within 1/8 inch (3.2 mm) from the top surface of the door when the door is in the open position.

7.6.8 A gap may exist between the body of a component (such as a circuit breaker or a receptacle) that projects through an opening in the dead front and the metal of the dead front, but such a gap shall not exceed 3/32 inch (2.4 mm) on either side (one side only) and 1/8 inch (3.2 mm) total (both sides) with the dead front panel and the component assembled in any position that will result from ordinary assembly.

7.7 Doors and covers

7.7.1 An opening in an enclosure giving access to a live part or wiring shall be closed by a door or cover. An opening giving access to a fuse or pull-out fuseholder shall be closed by a door.

7.7.2 A door or cover over an opening in the enclosure as well as a door or cover provided to keep rain from a receptacle or a switch and circuit breaker handle shall comply with the requirements for doors and

AVA Documents
Document Sharing Hub
Full document details: UL 231 2025

covers. Outlet box hoods installed for this purpose shall comply with requirements for "Extra-Duty" outlet box hoods in UL 514D.

7.7.3 A door or cover shall have flanges for the full length of all edges. The flanges shall:

a) Not be less than 1/2 inch (12.7 mm) deep;

b) Make a close telescoping fit with the outside walls of the enclosure; and

c) Overlap the enclosure edges not less than 7/16 inch (11.1 mm).

Exception No. 1: Openings for the cord may be used under the provisions of 7.4.1 and 7.6.5.

Exception No. 2: The flange on the bottom edge of the door or cover may be omitted or reduced in depth if the test described in 7.7.5 is successfully completed, and if:

a) All sides of the dead front are flanged at least 1/2 inch (12.7 mm) and, with the dead front in any position that might result from assembly, no single gap between any side of the front and the adjacent enclosure wall exceeds 3/32 inch (2.4 mm), and the total of the gaps between two opposite dead-front sides and their adjacent walls do not exceed 1/8 inch (3.2 mm);

b) The enclosure walls have flanges, projections, or that which has been determined to be equivalent, to provide minimum 1/2 inch overlaps with the dead front; or

c) The construction uses combinations of such flanges and overlaps (such as two walls with flanges and two with overlaps).

Exception No. 3: The flange on the upper edge of a door or cover may be reduced in depth or may be omitted if the door or cover in combination with the top wall of the enclosure and a flange formed from the top wall overlaps the door or cover at least 1/2 inch in accordance with either of the following conditions:

a) If the width of the door or cover is 10 inches (254 mm) or less.

b) If the width of the door or cover is at least 10 inches but no more than 18 inches (457 mm) and complies with the tests specified in 7.7.6.

Exception No. 4: A door is not required to comply with these requirements if the door serves only as a rain shield for a receptacle or for a switch or circuit-breaker handle.

7.7.4 To determine if a flanged door or cover complies with the requirement in 7.7.3 regarding depth of flange, the distance between the flat portion of the door or cover (clear of forming radii, beads, draws, or the like) and a straight-edge placed across any two flanges at any point is to be measured.

7.7.5 If the flange is omitted in accordance with Exception No. 2 to 7.7.3, the construction shall comply with 7.7.6 except the deflection under the load may exceed 1/8 inch (3.2 mm). However, there shall not be permanent deflection greater than 1/8 inch in the door or cover or in its supporting structure after the test load is removed.

7.7.6 A door or cover as described in Exception No. 3(b) to 7.7.3, or a cover or cap as described in the Exception to 9.2.1, may be used if it is not deflected more than 1/8 inch (3.2 mm) when subjected to a force created by placing a 30-pound (13.6-kg) weight at any point 1 inch (25.4 mm) from the edge. The test is to be conducted with the cover mounted on the enclosure in the intended manner. The force is to be applied through the end of a steel probe having a square face 1/2 by 1/2 inch (12.7 by 12.7 mm). The box is to be on its back on a horizontal surface that is smooth and firm.

Documents
Document Sharing Hub
Full document details: UL 231 2025

7.7.7 If the top of the door or cover has an inward flange and the front of the top end wall has an overlapping downward flange of not less than 1/4 inch (6.4 mm), the 1/2-inch (12.7-mm) overlap may consist of the sum of the overlaps of the two adjacent flanges if the cover flange is within 1/8 inch (3.2 mm) of the top wall with the door or cover closed.

7.8 Meter socket base

7.8.1 Any live part within a 3-inch (76.2-mm) radius of the center of a meter socket base shall be recessed not less than 1/2 inch (12.7 mm) behind the front plane of:

a) The meter mounting rim of a ring-type meter socket as shown in Figure 7.5; or

b) The meter support of a ringless-type meter socket.

Figure 7.5

Ring-Type Meter Socket

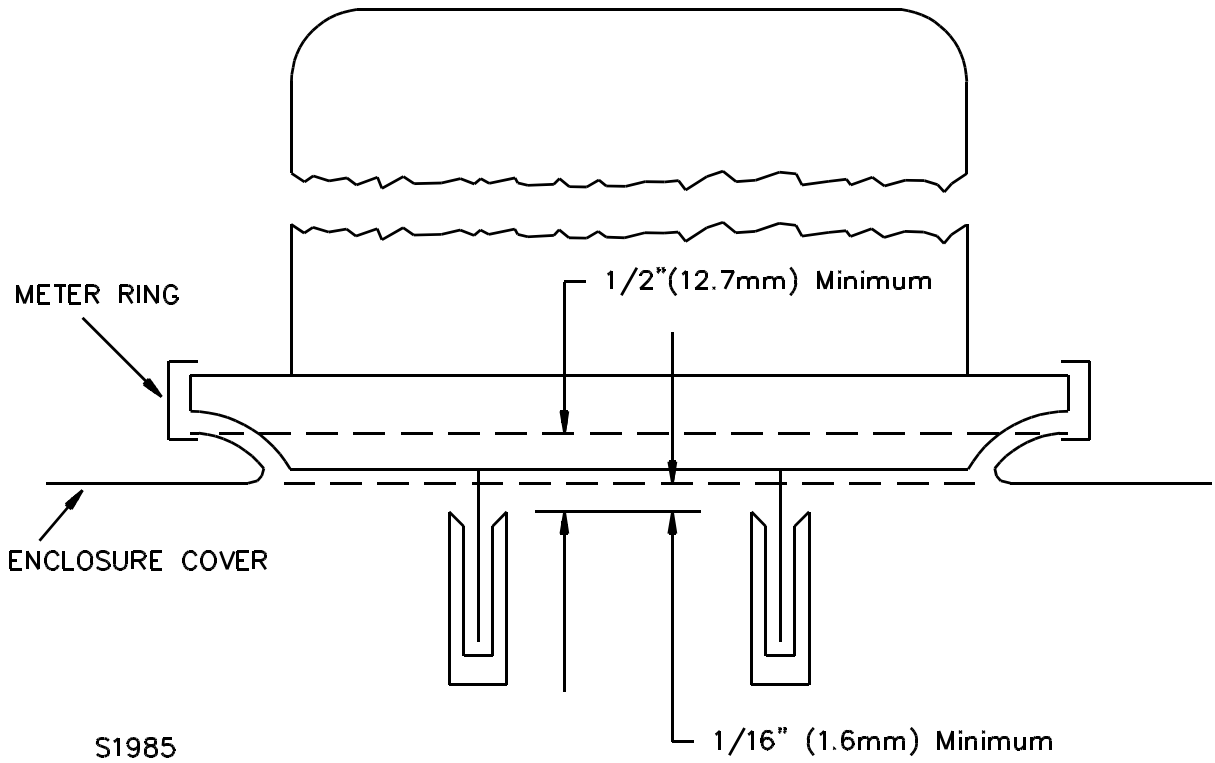

7.8.2 A meter-socket base shall be mounted independently of the cover unless it is intended to be used with a current transformer.

7.8.3 If a meter socket base is secured independent of the cover, the construction of a ring-type meter socket shall be such that removal of the cover necessitates a procedure tending to guide the cover clear of any uninsulated part.

Exception: The guiding means is not required if the jaws or other live part of the meter socket are recessed at least 1/16 inch (1.6 mm) behind the front plane of the meter socket cover.

Documents
Document Sharing Hub
Full document details: UL 231 2025

7.9 Ventilation openings

7.9.1 If ventilation openings are provided, they shall comply with 7.9.2 – 7.9.12.

7.9.2 Ventilation openings shall be guarded so that there is no direct access to a live part as covered in 7.9.3 and 7.9.4.

7.9.3 Ventilation openings shall be:

a) Screened or louvered openings with internal barriers; or

b) Hoods or stacks with labyrinth air passages.

7.9.4 A barrier shall be of such dimensions and located so that a straight line drawn from any live part past the edge of the barrier will intersect the enclosure minimum 1/4 inch (6.4 mm) from the edge of an opening.

7.9.5 A ventilation opening – slot, louver, or the like – shall be protected by:

a) One or more baffles;

b) Barriers; or

c) Other obstructions.

of such dimensions and locations that any access path to a live part requires at least two changes of direction, one of which involves an angle of 90° or more from a straight line, as shown in Figure 7.6. In addition, if the minor dimension of a ventilation opening is larger than 1/4 inch (6.4 mm), it shall be protected by a screen having a minor dimension no larger than 1/4 inch.

Documents
Document Sharing Hub
Full document details: UL 231 2025

Figure 7.6

Angle of Change of Direction

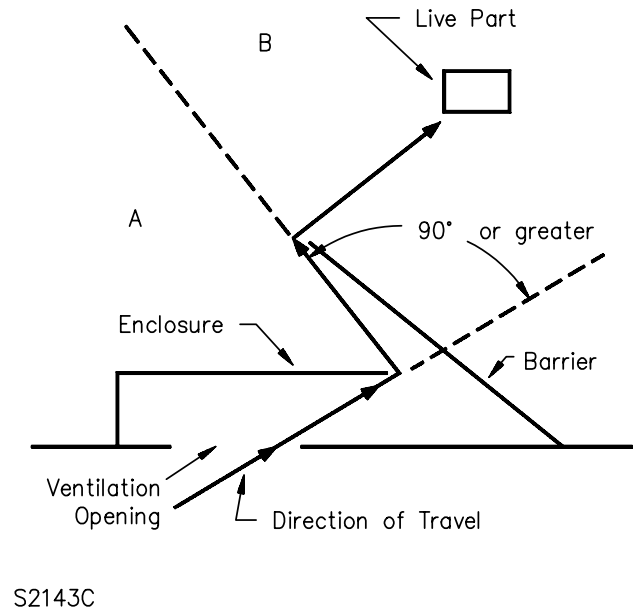

A – No live parts permitted in this area.

B – Live parts may be present in this side of barrier.

7.9.6 The size, shape, and location of a screened opening shall not weaken the overall enclosure.

7.9.7 The wires of a screen required to protect a ventilation opening shall be no smaller than 16 AWG (1.3 mm^2) and the openings in the screen shall not exceed 1/4 inch (6.4 mm) in any dimension.

7.9.8 Perforated sheet steel or expanded-steel mesh shall not be less than 0.042 inch (1.07 mm) thick if uncoated or 0.045 inch (1.14 mm) thick if zinc-coated, if the mesh openings or perforations are 1/2 square inch (3.23 cm^2) or less in area. For larger openings, the steel or mesh shall be no less than 0.080 inch (2.03 mm) thick if uncoated or 0.084 inch (2.13 mm) thick if zinc-coated.

Exception: If deflection of the expanded-steel mesh will not alter the clearance between uninsulated live parts and grounded metal so as to reduce the spacings to values below the minimum values specified in Table 17.1, expanded-steel mesh may be made of minimum 0.024-inch (0.61-mm) thick sheet steel if uncoated or 0.028-inch (0.71-mm) thick sheet steel if zinc-coated.

7.9.9 A grille construction complying with the intent of the requirements in the Exception to 7.9.8 may be used for a particular application.

7.9.10 The width of ventilation louvers in an enclosure shall be such that at least 1/6 of the enclosure material will remain at each end of the louver.

7.9.11 A separate louvered panel that is riveted or welded in place over a ventilation opening in the enclosure shall not be less than 0.032-inch (0.81-mm) thick sheet steel.

7.9.12 A louver in the enclosure for ventilation shall be located and arranged so that the entrance of water will be controlled in accordance with the requirements in Exception No. 1 to 25.1.1 and the accessibility of live parts will be in accordance with the requirements in 7.2.2.

AVA Documents
Document Sharing Hub
Full document details: UL 231 2025

8 Connections for Wiring Systems

8.1 Facilities shall be provided for accommodating permanently connected line or load conductors of the required ampacity by means of one of the wiring systems rated for the application.

8.2 If provided, a knockout shall be located so that the installation of a bushing for conduit of the size required to accommodate conductors having the ampacities necessary for line or load connections will result in spacings complying with the requirements in this Standard.

8.3 If provided, a hole for conduit shall be threaded unless it is located where not exposed to rain or spray or is wholly located below the lowest terminal lug or other live part within the enclosure and shall be provided with a conduit end stop unless the thread is tapered.

8.4 Removal of a cover for making or inspecting line and load connections shall not require removal or disturbing of a permanently connected wiring system.

8.5 A conduit hub in an enclosure shall be threaded and shall have a wall thickness before threading no less than that of the corresponding trade size of conduit. A conduit hub shall not depend upon friction alone to prevent its turning, and shall be capable of withstanding the torque specified in Table 8.1 applied to a short length of rigid conduit threaded into the hub in the intended manner, without turning in the enclosure and without stripping of any threads. The enclosure shall be securely (rigidly) mounted or supported.

Table 8.1
Applied Torque for Conduit Threaded into Hub

Conduit trade size inch	Torque	
	lb-inch	(N·m)
3/4 and smaller	800	(90)
1, 1-1/4, or 1-1/2	1000	(113)
2 and larger	1600	(181)

8.6 If threads for the connection of conduit are tapped all the way through a hole in an enclosure, or if a construction that has been determined to be equivalent is used, there shall not be less than 3-1/2 threads in the metal, and the construction shall be such that a conduit bushing can be attached as intended. If threads for the connection of conduit are not tapped all the way through a hole in an enclosure wall, conduit hub, or the like, there shall be no less than five full threads in the metal and there shall be a smooth, well-rounded inlet hole for the conductors which shall afford protection to the conductors that has been determined to be equivalent to that provided by a standard conduit bushing, and which shall have an internal diameter approximately the same as that of the corresponding trade size of rigid conduit.

8.7 Separable conduit hubs and closure fittings shall be designed so that the combination will comply with the requirements in 8.3, 8.5 and 8.6.

8.8 An opening in metal for the passage of conductors (internal or field-installed) shall be such as to minimize inductive heating.

Documents
Document Sharing Hub
Full document details: UL 231 2025

9 Mounting Posts and Pedestals

9.1 General

9.1.1 A metallic mounting post or pedestal shall not be less than 12 square inches (77 cm^2) in cross section and 2-1/2 inches (63.5 mm) deep, and at least three sides shall be fabricated of galvanized or stainless steel no less than 0.070 inch (1.8 mm) thick, or of aluminum no less than 0.095 inch (2.41 mm) thick.

Exception No. 1: The enclosure may be less than 2-1/2 inches deep, less than 12 square inches in cross-sectional area, or less than 0.070 inch thick steel, if the mounting post or pedestal is tested in accordance with 32.1 – 32.3 and 33.1 – 33.3, and if it is fabricated of steel not less than 0.056 inch (1.42 mm) thick or of a non-metallic material.

Exception No. 2: The enclosure may be less than 2-1/2 inches deep, less than 12 square inches in cross sectional area, or less than 0.095 inch thick aluminum, if the mounting post or pedestal is tested in accordance with 32.1 – 32.3 and 33.1 – 33.3, and if it is fabricated of aluminum not less than 0.075 inches (1.9 mm) thick.

9.1.2 A non-metallic mounting post or pedestal shall be subjected to the torque deformation and beam loading deflection tests specified in 32.1 – 32.3 and 33.1 – 33.3.

9.1.3 That portion of a steel post located below grade level and up to 12 inches (305 mm) above grade level shall be painted on both the inside and outside surfaces in addition to being stainless or galvanized – Designation G90 or equivalent as covered in UL 50E.

Exception: Painting is not required on austenitic stainless steel designated as American Iron and Steel Institute (AISI) Type 302, 303, 304, 305, 309, or 316.

9.1.4 Aluminum in a pedestal shall not be in contact with the concrete mounting pad unless a coating is used to separate the aluminum from the concrete pad. Aluminum in a post shall not extend below a level 12 inches (305 mm) above the marked grade level unless a coating is used on both the inside and outside of those surfaces that extend below 12 inches above the marked grade level. The coating shall be tested to demonstrate resistance to corrosion that has been determined to be equivalent to that of galvanized (G90 zinc coating) steel 0.061 inch (1.55 mm) thick.

9.2 Cover

9.2.1 A cover or cap for a mounting post or pedestal shall be of metal not thinner than as required in 7.1.1 or other material rated for the purpose. A cover or cap fabricated from 0.056-inch (1.4-mm) thick steel may be any length if its width does not exceed 10 inches (254 mm).

Exception: A cover or cap provided on a mounting post or pedestal to close unused openings intended to accommodate a field-installed separable power outlet may be thinner than specified herein if the construction complies with the test described in 7.7.6.

9.3 Electrical connections

9.3.1 The distance between the marked final grade level of a mounting post as covered in 38.13 or the bottom of the base of a mounting pedestal and the lowest uninsulated live part, receptacle face, or splicing area shall not be less than 1 foot (305 mm) nor less than specified in 14.7 if applicable.

Documents
Document Sharing Hub
Full document details: UL 231 2025

9.4 Wire opening

9.4.1 The opening provided in the base of a mounting post for the entrance of underground wiring shall be rolled, flanged, or equipped with a bushing so that there will be a smoothly rounded surface against which the cables can bear. The opening shall be at least 18 inches (457 mm) below the marked final grade level.

9.5 Bonding

9.5.1 Means shall be provided for bonding a metal raceway to a post or pedestal, and there shall be grounding continuity from the post to the power outlet.

9.6 Overlap

9.6.1 A power outlet intended for mounting on a separable mounting post or pedestal shall be provided with an opening having side extensions that will overlap the metal of the post or pedestal not less than 1 inch (25.4 mm). The two enclosures shall be secured at the overlap by not less than two screws on each side exceeding 4 inches (102 mm) in width and by not less than one screw on each side 4 inches or less in width.

9.7 Instructions

9.7.1 With respect to 1.7, a power outlet provided with a mounting post or pedestal shall be provided with instructions indicating the correct mounting procedure. A mounting post shall be provided with installation instructions in accordance with Mounting in Concrete, Section 40.

9.8 Pedestal

9.8.1 A mounting pedestal shall have mounting holes or similar provision in the base for securing the pedestal to a concrete slab. Aluminum in a pedestal enclosure shall not be in contact with the concrete mounting pad. A metallic or nonmetallic coating used to separate aluminum from a concrete pad shall be tested to demonstrate resistance to corrosion that has been determined to be equivalent to that of galvanized (G90 zinc coating) steel 0.061 inch (1.55 mm) thick.

10 Wiring Devices

10.1 General

10.1.1 Not more than six 10 AWG (5.3 mm^2) or smaller, four 6 AWG (13.3 mm^2), or 8 AWG (8.4 mm^2) insulated, stranded conductors shall be used to supply or ground components (switches, receptacles, circuit breakers, or the like) mounted on a panel that must be or is likely to be moved during installation or for making field connections. Only pressure wire-connector terminals or wire-binding screw terminals shall be used on components so mounted.

Exception: More than six but not more than ten 10 AWG or smaller conductors may be used to supply or ground components mounted on a panel or a hinged top of a pedestal if the conductors are bound together or otherwise caused to retract into the enclosure in an orderly fashion when the dead front is mounted in place or the top is closed.

10.2 Receptacles

10.2.1 A receptacle in a power outlet shall be a grounding type having a voltage rating appropriate for the voltage rating of the power outlet.

AVA Documents
Document Sharing Hub
Full document details: UL 231 2025